148 U.S. 270

RECORD, CASE No. 13,724.

SUPREME COURT OF THE UNITED STATES.

OCTOBER TERM, 1892.

TERM No., 143.

HENRY HUBER AND JAMES E. BOYLE, APPELLANTS,

vs.

THE N. O. NELSON MANUFACTURING COMPANY.

APPEAL FROM THE CIRCUIT COURT OF THE UNITED STATES FOR THE EASTERN DISTRICT OF MISSOURI.

FILED OCTOBER 10, 1889.

RECORD, CASE No. 13,724.

SUPREME COURT OF THE UNITED STATES.

OCTOBER TERM, 1892.

TERM No., 143.

HENRY HUBER AND JAMES E. BOYLE, APPELLANTS,

vs.

THE N. O. NELSON MANUFACTURING COMPANY.

APPEAL FROM THE CIRCUIT COURT OF THE UNITED STATES FOR THE EASTERN DISTRICT OF MISSOURI.

INDEX.

	Original.	Print.
Caption	1	1
Order filing bill and for subpœna to issue	1	1
Bill of complaint	2	1
Subpœna and return	14	8
Amendment to bill	15	9
Answer	16	10
Replication	32	19
Final decree	33	20
Order allowing appeal, &c.	34	20
Appeal bond	34	21
Opinion of Judge Thayer	36	22
Stipulation as to exhibits, &c.	56	33
Notice to take testimony	58	34
Evidence for complainants	60	35
Testimony of Arthur C. Fraser	60	35

JUDD & DETWEILER, PRINTERS, WASHINGTON, D. C., SEPTEMBER 13, 1892.

	Original.	Print.
Exhibit No. 8—Fraser's drawing illustrating siphon action of Trombe tank	84	50
5—Fraser's drawing of Peters & Donald closet	85	50
10—Fraser's drawing of defendant's "Syphonia" closet	93	54
Testimony of James E. Boyle	173	108
Exhibit No. 15—Drawing of Boyle's experimental tank	176	110
17—Boyle & Huber agreement, Jan. 27, 1885	208	134
Testimony of Adolf C. Tiedemann	212	137
Stipulation as to signature of Boyle to assignment, as to stamp duty on British patent, as to copartnership agreement of Huber & Co., and as to signature of Fraser as witness to license	225	145
Examiner's certificate	227	147
Stipulation as to Complainants' Exhibit A x, &c.	228	147
Notice to take testimony	232	150
Stipulation as to taking testimony in rebuttal	233	150
Evidence for complainants in rebuttal	234	151
Testimony of Samuel Clark	235	151
Thomas J. Tuomey	245	159
Henry Morton	256	167
John A. C. Teppe	285	168
Adolf C. Tiedemann	308	203
Edward Murphy	316	208
Arthur C. Fraser	335	223
Exhibit A x—File-wrapper of reissue letters patent No. 10826, granted James E. Boyle April 19, 1887	392	262
B x—Affidavit of James E. Boyle	394	263
C x—Affidavit of Arthur C. Fraser	397	265
D x—Letter of examiner to Boyle, January 27, 1885	399	267
E x—Argument of Boyle's attorney (not set out)	400	267
F x—Letter of examiner to Boyle, April 17, 1885	400	267
G x—File-wrapper and contents of appeal to board of examiners-in-chief in matter of application of Boyle for reissue of letters patent No. 291,139	401	268
H x—Letter of examiner to Boyle, May 21, 1886	406	271
I x—Decision of examiner of interferences, Mar. 7, 1887	407	272
No. 21—Cost list of Trombe tank	408	273
22—Cost list of single-charge injector tank	410	274
23—Cost list of complainants' Peters & Donald tank	411	275
Stipulation as to exhibits	414	276
Stipulation as to testimony for defendant	415	276
Evidence for defendant	417	277
Exhibits offered, &c.	417	277
Testimony of Peter White	424	281
C. M. Woodward	495	320
Arthur C. Fraser	518	334
Exhibits offered, &c.	522	337
Testimony of Samuel Knight	524	337
Henry Flad	551	352
Notary's certificate	572	353
Stipulation as to defendant's exhibits	574	366
Exhibit No. 18—Extract from Knight's American Mechanical Dictionary under the title of "Aspirator"	578	368

	Original	Print.
Exhibit No. 18½—Extract from Eubank's Hydraulics and Mechanics under the title of "The Trombe"	581	370
19—Extract from Chambers' Encyclopædia under the title of "Pumps"	584	372
20—Extract from Ure's Dictionary of Arts, Manufactures, and Mines under the title of "Aspirator"	586	373
24½—Extract from Appleton's Mechanical Dictionary under the title of "Air Pump"	590	375
25—Extract from Cooley's Cyclopædia of Practical Receipts under the title of "Air Pump"	591	379
7—Stipulation as to facts	594	377
9—Copy of patent register in matter of Peters & Donald patent	595	378
Order to transmit original paper exhibits to U. S. Supreme Court	597	379
Clerk's certificate	598	379

1 *Bill of Complaint Filed.*

UNITED STATES OF AMERICA,
Eastern Division of the Eastern Judicial District of Missouri, } *ss:*

In the Circuit Court of the United States for the Eastern Division of the Eastern Judicial District of Missouri.

Be it remembered that on the third day of October, A. D. 1887, the following, among other, proceedings were had and appear of record in said court, to wit:

HENRY HUBER *et al.*, Complainants,
vs.
N. O. NELSON MANUFACTURING COMPANY, Defendant. } 2905.

Now come the complainants, by Paul Bakewell, their solicitor, and file bill of complaint; and thereupon, on motion of said solicitor, it is ordered that a subpœna in chancery issue herein, returnable to the November rules.

Said bill of complaint is in words and figures following, to wit:

2 In the Circuit Court of the United States for the Eastern Division of the Eastern District of Missouri, This — Day of ——, 1887.

HENRY HUBER and JAMES E. BOYLE
vs.
THE N. O. NELSON MANUFACTURING COMPANY. } In Equity.

Bill of Complaint.

To the judges of the circuit court of the United States for the eastern district of Missouri:

Henry Huber, of the city, county, and State of New York and a citizen of the State of New York, and James E. Boyle, of the city of Brooklyn, Kings county, New York, and a citizen of the State of New York, bring this their bill of complaint against the N. O. Nelson Manufacturing Company, a corporation organized under the laws of the State of Missouri and doing business in the city of St. Louis, in said State of Missouri.

And thereupon your orators complain and say that—

1. Stewart Peters and William Donald, of Glasgow, Scotland, being the original, first, and joint inventors of certain and useful improvements in water-closets, fully described in the letters
3 patent issued therefor, as hereinafter stated, and not known or used by others in this country or patented or described in any printed publication in this or in any foreign country before their invention thereof, and not having to their knowledge been in public use or on sale in the United States for more than two years

prior to the date of the filing of their application for letters patent therefor, and said improvements having been patented to them by letters patent of Great Britain dated April 7, 1874, and numbered 1207, but in no other countries or country, to the best of their knowledge, prior to the issuing of letters patent of the United States therefor, and, being subjects of the Queen of Great Britain, made due application on November 29, 1881, for letters patent of the United States upon said improvements, as in and by the letters patent hereinafter named or a certified copy thereof, here in court to be produced, will more fully appear.

2. And your orators further show unto your honors that certain assignments of certain rights in said improvements in water-closets and in the letters patent to be granted thereon have been made and duly recorded in the United States Patent Office, whereby your orator Henry Huber, prior to the infringements herein complained of and prior to the issuing of letters patent on said improvements, became and now is the sole owner of said improvements and the letters patent hereinafter named and issued thereon, as in and by said assignments or certified copies thereof, here in court to be produced, will more fully appear.

3. And your orators further show unto your honors that, all the requisitions of law having been fully complied with in behalf of the said application for letters patent for said improvements, letters patent therefor, in accordance with the assignments hereinbefore mentioned, issued in due form of law to your orator Henry Huber in the name of the United States and under the seal of the Patent Office of the United States and duly signed and counter-
4 signed in due form of law, bearing date June 27, 1882, and being numbered 260,232, whereby was granted and secured unto your orator, his heirs or assigns, for the term of seventeen years from said date, subject to the provisions and limitations of section 4887 of the Revised Statutes by reason of the British patent No. 1207, dated April 7, 1874, aforesaid, the full and exclusive right and liberty of making, using, and selling throughout the United States and the territories thereof the said improvements in water-closets therein specified and claimed, as in and by said letters patent or a certified copy thereof, here in court to be produced, will more fully appear.

4. And your orators further show unto your honors that said British letters patent No. 1207 on said improvements in water-closets were granted for the term of fourteen years from April 7, 1874, as in and by said letters patent or a certified copy thereof, here in court to be produced, will more fully appear.

5. And your orators further show unto your honors that your orator James E. Boyle, being the original, first, and sole inventor of new and useful improvements in flushing apparatus for water-closets fully described in the letters patent issued therefor, as hereinafter stated, and not known or used by others in this country or patented or described in any printed publication in this or in any foreign country before his invention thereof, and not having been to his knowledge in public use or on sale in the United States for more

than two years prior to the date of the filing of his application for letters patent therefor, and not having been patented to him or to others with his knowledge or consent in any country prior to the issuing of letters patent of the United States to him therefor, and being a citizen of the United States and having made due application on March 12, 1883, and having fully and in all respects complied with all the requisitions of the law in that behalf, did obtain letters patent therefor, issued in due form of law to him in the
5 name of the United States and under the seal of the Patent Office of the United States, and duly signed and countersigned in accordance with law, bearing date January 1, 1884, and being numbered 291,139, whereby was granted and secured unto said James E. Boyle, his heirs or assigns, for the term of seventeen years from said date, the full and exclusive right and liberty of making, using, and selling throughout the United States and the territories thereof the said improvements in flushing apparatus for water-closets therein specified and claimed.

6. And your orators further show unto your honors that said letters patent proving inoperative by reason of a defective and insufficient specification and claims, said error and defect having arisen by inadvertence, accident, and mistake and without any fraudulent or deceptive intention, and said invention or any part thereof not having been abandoned by said James E. Boyle, said Boyle surrendered said letters patent and petitioned the Commissioner of Patents to cause a new patent for the same invention and in accordance with the corrected specification filed in the Patent Office January 2, 1885, to be issued to him, and, said James E. Boyle having complied fully and in all respects with the requisitions of the law in that behalf, new and reissued letters patent for said invention were issued in due form of law to him in the name of the United States and under the seal of the Patent Office of the United States and duly signed and countersigned in accordance with law, bearing date April 19, 1887, and being numbered 10826, whereby was granted and secured according to law unto said James E. Boyle, his heirs and assigns, for the remainder of the term of seventeen years from January 1, 1884, the full and exclusive right and liberty to make, use, and sell the said improvements in flushing apparatus for water-closets therein specified and claimed, as in and by said reissued letters patent or a certified copy thereof, here in court to be produced, will more fully appear.

6 7. And your orators further show unto your honors that your orator James E. Boyle has given and granted unto your orator Henry Huber an exclusive license to make, use, and sell throughout the United States the improvements in flushing apparatus for water-closets as described and claimed in said reissued letters patent, subject only to the payment of royalties on the same by said Huber to said Boyle.

8. And your orators further show unto your honors that the inventions and improvements claimed in said letters patent No. 260,232 and said reissued letters patent No. 10826 are capable of conjoint use, and that their subjects are correlative and the claimed

inventions can be and have been embodied in the same water-closet.

9. And your orators further show unto your honors that your orator Henry Huber has been, ever since the grant of said letters patent No. 260,232, and still continues to be the sole and exclusive owner of the same; that your orator Henry Huber has been, ever since the grant of said reissued letters patent No. 10826, and still continues to be the exclusive licensee under the same, and that said Henry Huber has the sole and exclusive right and privilege of making, using, and selling water-closets and flushing apparatus therefor made in accordance with the invention set forth in said letters patent.

10. And your orators further show unto your honors that since the issue of said several letters patent as aforesaid, as well as while the applications therefor were pending in the Patent Office, your orator Henry Huber has invested large sums of money and has been to great trouble in and about the said invention in making the same profitable to himself and useful to the public and in paying to said James E. Boyle royalties as licensee under said Boyle's patent aforesaid, and that the public have generally acqui-
7 esced in the rights of your orators as secured to them by the said letters patent, and that a large number of water-closets and flushing apparatus therefor made in accordance with said inventions have been sold by your orator Henry Huber to the great advantage of the public, and your orators believe that they will realize large gains and profits therefrom if infringements by said defendant and others be prevented; but the defendant, well knowing the premises and the rights secured to your orators as aforesaid, but contriving to injure your orators and deprive them of the benefits and advantages which would otherwise accrue unto them from said inventions after the issuing of each of said letters patent 260,232 and said reissued letters patent No. 10826 and before the commencement of this suit, did, as your orators are informed and believe, within the eastern district of Missouri and elsewhere in the United States, without the license or allowance and against the will of your orators and in violation of their rights and in infringement of the said letters patents 260,232 and 10826, conjointly, unlawfully, and wrongfully and in defiance of the rights of your orators, make, use, and vend to others to be used and sold water-closets made in accordance with said letters patents and embodying and containing essential and material parts of the improvements described and claimed in each and both of said letters patent, and that the defendant will continue so to do and is threatening to make large numbers of said water-closets and to supply the market therewith and to sell the same.

11. And your orators further show unto your honors that the defendant has made and sold water-closets in infringement of your orators' rights and in defiance of the rights acquired by and secured to your orators as aforesaid, whereby they have been and still are being deprived of great gains and profits that might and otherwise would have been obtained by your orators, but which have been

realized and enjoyed by said defendant by and through said unlawful acts and doings.

8 12. And your orators further show unto your honors, on information and belief, that the said defendant has made, sold, and used a large number of said water-closets, and has a large number of said water-closets on hand, which said defendant is offering for sale and purposes to use, and has made and realized large profits and advantages therefrom, but to what extent and how many exactly your orators do not know, and your orators say that the use of said inventions by said defendant and its other aforesaid unlawful acts in disregard and defiance of the rights of your orators have the effect to aid, encourage, and induce others so to venture to infringe said letters patent in defiance of your orators' rights.

13. And your orators further show unto your honors, on information and belief, that said defendant has made, put upon the market, and caused to be sold large numbers of a water-closet called and known as the "Syphonia" closet, which is in direct violation of the rights secured to your orators by the letters patent aforesaid, each of which "Syphonia" closets embodies the inventions contained in both of said letters patent, and which infringes, among other claims, the first, second, and third claims in said letters patent 260,232 and the first and second claims in said reissued letters patent 10826.

14. And your orators further show unto your honors that they are unaware of the number of said "Syphonia" closets made and sold by said defendant, or whether any other water-closets have been made or sold by them embodying the inventions secured to your orators or any material or substantial part thereof.

15. And your orators further show unto your honors that they have caused notice to be given to said defendant of said infringements of the rights of your orators in the premises and have requested said defendant to desist and refrain therefrom, but

9 said defendant has disregarded said notice and refused to desist from said infringement, and still continues to make, sell, and use water-closets as aforesaid in disregard of your orators' rights.

16. And your orators pray your honors to grant unto your orators a preliminary and also a permanent writ of injunction issuing out of and under the seal of this honorable court, directed to the said N. O. Nelson Manufacturing Company and strictly enjoining it and its officers, agents, and employés not to make or use or sell nor cause to be made or used or sold any water-closet or flushing apparatus therefor containing or employing the invention covered and secured by said letters patent 260,232 and 10826 or either of them.

17. And your orators further pray that the said defendant may be compelled to render a full and perfect account of all the water-closets and flushing apparatus therefor embracing any improvements patented and vested in your orators as aforesaid which have been made and sold by the defendant and which said defendant now has on hand, together with a full and perfect account of all the prices and profits realized by such sales, and that this the defendant may do under its corporate seal and under the oath of its proper of-

ficers according to the best and utmost of their knowledge, information, and belief.

18. And your orators further pray that the said defendant may be deemed to account for and pay over to your orators all gains and profits realized from its unlawful making, using, and selling of water-closets or flushing apparatus therefor embracing the improvements patented and vested in your orators as aforesaid, and also that the infringing closets now in the possession or under the control of the defendant may be delivered up to your orators or be destroyed, and also that the defendant be decreed to pay the costs of this
10 suit, and that your orators may have such further and other relief in the premises as the nature of the case may require and to your honors seem meet.

18*a*. And your orators further pray that upon the entering of a decree of infringement as above prayed for your honors may proceed to assess or cause to be assessed under your honors' direction, in addition to the gains and profits to be accounted for by the defendant as aforesaid, the damages your orators have sustained by reason of said infringement, and that your honors may increase the actual damages so assessed to a sum equal to three times the amount of said assessment under the circumstances of the wilful and unjust infringement by the said defendant as herein set forth.

19. To the end, therefore, that the said defendant may, if it can, show why your orators should not have the relief prayed hereby and may, under its corporate seal and under the oath of its proper officers and according to the best of their knowledge, information, and belief, full, true, direct, and perfect answer make to the several interrogatories hereinafter numbered and set forth, as by the note hereinunder written it is required to answer—that is to say:

(1.) Whether the defendant has made or sold water-closets or flushing apparatus therefor substantially like the inventions described and claimed in said letters patent 260,232 and 10826 or in which any material parts thereof are embodied.

(2.) Whether the defendant has made or sold water-closets consisting, among other parts, of a bowl, a fixed trap bend in the passage leading therefrom whereby a portion of water is retained in the bowl, a second trap in the discharge passage leading from the first whereby an air space is formed between the two traps, and an orifice communicating with said air space and adapted for the attachment of an air pipe.

(3.) Whether the defendant has made or sold water-closets
11 and flushing apparatus therefor consisting, among other parts, of a bowl, a fixed trap bend in the soil passage leading therefrom whereby a portion of water is retained in the bowl, and a second trap in said soil passage below the first whereby an air space is formed between the two traps, in combination with means for rarifying the air in said space upon the flushing of the closet.

(4.) Whether the defendant has made or sold water-closets and flushing apparatus therefor consisting, among other parts, of a bowl, a trap leading therefrom, a second trap in the discharge passage leading from the first, and an air space between the two traps in

combination with a flushing valve and means for operating the same to flush the closet and means for drawing air from the space between the two traps, constructed to be set in operation by the act of opening said flushing valve.

(5.) Whether the defendant has made or sold water-closets and flushing apparatus therefor consisting, among other parts, of a bowl with the soil passage leading therefrom and two successive traps in said passage in combination with a flushing pipe for conveying water to the bowl, a suction injector arranged in connection with said pipe and to be traversed by the flushing water, and an air pipe leading from the air space between said traps and communicating with said injector, whereby the flow of water through said injector serves to draw air from said air space.

(6.) Whether the defendant has made or sold flushing apparatus for water-closets consisting, among other parts, of a reservoir tank, a flushing valve controlling the outlet thereof, a flushing pipe for conveying water therefrom to the bowl of the closet, a suction injector arranged in connection with said pipe and to be traversed by the descending flushing water, and a suction pipe in connection with said injector, whereby the water on flowing from said tank
12 downward through the flushing pipe traverses said injector and sucks the air from said suction pipe.

(7.) Whether the defendant has made and sold and is making and selling a water-closet known as and called the "Syphonia" water-closet.

(8.) Whether said "Syphonia" closet embodies the several features set forth in interrogatories 2, 3, 4, 5, and 6 respectively, or, if it does not, then in what respects said closet differs from the descriptions embodied in said respective interrogatories.

(9.) Whether it is not a fact that said "Syphonia" closet embodies all of the several features set forth in said interrogatories 2, 3, 4, 5, and 6 respectively, with the exception that the second or lower trap in the soil passage mentioned in said interrogatories is omitted; and, if so, whether it is not essential to the operation of the closet that it be set in connection with such a trap, and whether said defendant has not habitually instructed plumbers to set said "Syphonia" closet with such a trap in order to form a confined air space between said trap and the upper trap, which serves to retain water in the bowl.

(10.) Whether any other closet made by the defendant embodies any of the features set forth in interrogatories 2, 3, 4, 5, and 6 respectively.

(11.) Whether the defendant has made or sold any water-closets embracing the improvements in water-closets or any substantial part thereof patented and secured to your orators; and, if so, how many such water-closets have been made, how many sold, and how many are now on hand.

20. May it please your honors to grant unto your orators the writ of subpœna issuing out of and under the seal of this honorable court and directed to the said defendant, The N. O. Nelson Manufacturing

Company, commanding it by a certain day and under a cer-
13 tain penalty therein named to appear before your honors and make answer to this bill of complaint and to abide the order and decree of the court.

HENRY HUBER,
Complainant.
PAUL BAKEWELL,
Solicitor for Complainants.

ARTHUR S. BROWNE, *Of Counsel.*

NOTE.—The defendant, The N. O. Nelson Manufacturing Company, is required to answer the interrogatories numbered respectively 1, 2, 3, 4, 5, 6, 7, 8, 9, 10, and 11.

PAUL BAKEWELL,
Solicitor for Complainants.

CITY, COUNTY, AND STATE OF NEW YORK, *ss:*

On this 1st day of October, 1887, before me personally appeared Henry Huber and made oath that he has read the foregoing bill subscribed by him and knows the contents thereof, and that the same is true of his own knowledge except as to matters which are therein stated to be based on information and belief, and that as to those matters he believes it to be true.

JOHN A. SHIELDS,
U. S. Comm'r for the South. Dist. of New York.

Bill filed October 3, 1887.

A. P. SELBY, *Clerk.*

14 Said subpœna in chancery, with the marshal's return of service endorsed thereon, is in words and figures following, to wit:

Subpœna in Chancery.

UNITED STATES OF AMERICA,
Eastern Division of the Eastern Judicial District of Missouri, } *sct:*

In the Circuit Court of the United States in and for the Eastern Division of said District.

The President of the United States of America to The N. O. Nelson Manufacturing Company, Greeting:

You are hereby commanded to be and appear at rules to be held at the office of the clerk of the circuit court of the United States in and for the eastern division of the eastern judicial district of Missouri, on the first Monday of November next, at the city of St. Louis, then and there to answer the bill of complaint of Henry Huber and James E. Boyle, citizens of the State of New York, filed against you on the third day of October, 1887; hereof fail not.

Witness the Honorable Morrison R. Waite, Chief Justice of the Supreme Court of the United States, the third day of October, 1887.

[SEAL.] Issued, at office, in the city of St. Louis, under the seal of said circuit court, the day and year last aforesaid.

A. P. SELBY, *Clerk.*

MEM.—The defendant to enter its appearance in this suit in the clerk's office on or before the day at which the writ is returnable; otherwise the bill may be taken *pro confesso.*

A. P. SELBY, *Clerk.*

(*Marshal's Return.*)

UNITED STATES OF AMERICA,
Eastern Division of the Eastern Judicial District of Missouri, } *sct:*

I hereby certify that I have executed this writ on the 3rd day of October, A. D. 1887, on the within-named defendant, The N. O. Nelson Manufacturing Company, by delivering a certified copy of same to N. O. Nelson, president of said company, at St. Louis, in above district.

P. W. COUZINS,
U. S. Marshal, Eastern District of Missouri,
By J. H. BOHLE, *Deputy.*

15 And afterwards, to wit, on the 18th day of October, A. D. 1887, there was filed in said cause, by leave of court, the following amendment to the bill of complaint, to wit:

Amendment to Bill of Complaint.

In the Circuit Court of the United States for the Eastern Division of the Eastern Judicial District of Missouri.

HENRY HUBER and JAMES E. BOYLE
vs.
THE N. O. NELSON MANUFACTURING COMPANY. } In Equity.

Amendment to the bill of complaint in this cause made pursuant to an order of the court entered on the 3d day of October, 1887.

Insert, to follow paragraph 18 of the bill on page 11, the following words:

18*a*. And your orators further pray that upon the entering of a decree of infringement as above prayed for your honors may proceed to assess or cause to be assessed, under your honors' direction, in addition to the gains and profits to be accounted for by the defendant as aforesaid, the damages your orators have sustained by reason of said infringement, and that your honors may increase the actual damages so assessed to a sum equal to three times the

amount of said assessment under the circumstances of the wilful and unjust infringement by the said defendant as herein set forth.

PAUL BAKEWELL,
Solicitor for Complainant-.

Filed by leave of court October 18, 1887.

A. P. SELBY, *Clerk.*

And afterwards, to wit, on the 29th day of December, A. D. 1887, there was filed in said cause an answer in words and figures following, to wit:

16 (*Answer.*)

In the Circuit Court of the United States for the Eastern Division of the Eastern District of Missouri.

HENRY HUBER and JAMES E. BOYLE
vs.
N. O. NELSON MANUFACTURING COMPANY. } In Equity.

The defendant, for answer to the bill of complaint of the complainants, answering, says:

The defendant admits that it is a corporation organized and existing under the laws of the State of Missouri.

The defendant on information and belief admits that Stewart Peters and William Donald were granted letters patent by Great Britain, dated April 7, 1874, and numbered 1207, for the alleged improvement in water-closets, particularly described in said letters patent, and also that said Peters and Donald filed application for letters patent of the United States November 29, 1881, and that letters patent of the United States, dated June 27, 1882, and numbered 260,232, were issued thereon to Henry Huber for improvements fully covered by said letters patent of Great Britain.

But the defendant has no knowledge or information sufficient to form a belief as to whether said Stewart Peters and
17 William Donald were the first and joint inventors of said improvements set forth and claimed in said letters patent numbered 1207, or as to whether said improvements were known or used in the United States or patented or described in any printed publication before their alleged invention, or as to whether said alleged improvements had been patented in any other foreign country than Great Britain prior to said application for letters patent of the United States, or as to whether said alleged assignments were executed and filed in the United States Patent Office, as alleged in the bill; and therefore the defendant denies that said Stewart Peters and William Donald were the first and joint inventors of said improvements, and it denies that said improvements were not known nor used in the United States nor patented nor described in any printed publication before their alleged invention, and it denies that said improvements had not been patented in any foreign country — than Great Britain prior to said application for letters patent

of the United States, and it denies that said improvements were not known or used in the United States more than two years before November 29, 1881; but defendant avers, on the contrary, that said improvements specified and claimed in said United States letters patent were well known and had been in use in the United States for more than two years before November 29, 1881; and the defendant denies that *mense* assignments were executed as alleged, or that said Henry Huber was or is the owner of said alleged improvements, and it denies that said letters patent numbered 260,232 secured to said Huber any rights whatever, and the defendant avers that said letters patent numbered 260,232 were issued without authority of law.

The defendant says that an act of parliament of the United
18 Kingdom of Great Britain and Ireland, approved July 1, 1852, and forming chapter 83 of 15 and 16 Victoria and entitled "An act for amending the law for granting patents for inventions," among other things, provides:

That certain officers named in the first section of said act "shall be commissioners of patents and inventions," and by section seven, that "every application for letters patent made under said act shall be referred by the commissioners, according to such regulations as they may think fit to make, to one of the law officers."

By section fifteen, that: "It shall be lawful for such law officer after such hearing, if any, as he may think fit, to cause a warrant to be made for the sealing of letters patent for the said invention, and such warrant shall be sealed with the seal of the commissioners, and shall set forth the tenor and effect of the letters patent thereby authorized to be granted," etc.

By section eighteen, that: "The commissioners, so soon after the sealing of the said warrant as required by the applicant for the letters patent, shall cause to be prepared letters patent for the invention according to the tenor of the said warrant, and it shall be lawful for the lord chancellor to cause such letters patent to be sealed with the great seal of the United Kingdom, and such letters patent so sealed shall extend to the whole United Kingdom of Great Britain and Ireland, the Channel islands and the Isle of Man," etc.

By section thirty-four thereof said statute provides that: "There shall be kept at the office appointed for filing specifications in chancery, under this act, a book or books to be called *the* 'the register of patents,' wherein shall be entered and recorded in chronological
order all letters patent granted under this act, the deposit
19 or filing of specifications, disclaimers, and memoranda of alterations filed in respect of such letters patent, all amendments in such letters patent and specifications, all confirmations and extensions of such letters patent, the expiry, vacating, or cancelling such letters patent, with the date thereof respectively, and all other matters and things affecting the validity of such letters patent as the commissioners may direct, and such register, or a copy thereof, shall be open at all convenient times to the inspection

of the public, subject to the regulations as the commissioners may make."

By section 56 of said act it is provided: "In citing this act in other acts of Parliament, instruments, and proceedings it shall be sufficient to use the expression 'the patent law amendment act, 1852.'"

As will more fully appear by a duly certified copy of said act, to which defendant craves leave to refer when produced,

That an act of said Parliament of Great Britain and Ireland, approved February 21, 1853, which forms chapter 5 of the acts of 16 Victoria and is entitled "An act to substitute stamp duties for fees on passing letters patent for inventions, and to provide for the purchase for the public use of certain indexes of specifications," the preamble and sections 1, 2, and 4 of which act read as follows to wit:

"Whereas it is expedient that the fees payable in respect of letters patent for inventions under the patent law amendment act, 1852, and mentioned in the schedule to such act, be converted into stamp duties: Be it enacted, therefore, by the Queen's most excellent majesty, by and with the advice and consent of the lords spiritual and temporal and commons in this present Parliament assembled and by authority of the same, as follows:

"I. Sections 17, 44, 45, 46, and 53 of the said patent law amendment act 1852, and so much of the schedule to the said act as relates to fees and stamp duties to be paid under the said act, shall be repealed.

"II. All letters patent for inventions to be granted under the provisions of the said patent law amendment act 1852 (except in the cases provided for in the fourth section of this act), shall be made subject to the condition that the same shall be void, and that the powers and privileges thereby granted shall cease and determine at the expiration of three years and seven years respectively from the date thereof, unless there be paid before the expiration of the said three years and seven years respectively the stamp duties in the schedule to this act annexed expressed, to be payable before the expiration of the third year and of the seventh year respectively, and such letters patent, or a duplicate thereof, shall be stamped with proper stamps showing the payment of such respective stamp duties, and shall, when stamped, be produced before the expiration of such three years and seven years respectively at the office of the commissioners, and a certificate of the production of such letters patent or duplicate so stamped, specifying the date of such production, shall be indorsed by the clerk of the commissioners on the letters patent or duplicate, and a like certificate shall be indorsed upon the warrant for such letters patent filed in the said office."

"IV. Where letters patent for England or Scotland or Ireland have been granted before the commencement of the said patent law amendment act 1852, or have been since the commencement of the said act, or hereafter may be granted for any invention, in respect of any application made before the commencement of the said act, letters

patent for England or Scotland or Ireland may be granted
21 for such invention in like manner as if the said act had not been passed; provided, always, that in lieu of all fees or payments and stamp duties which were at the time of the passing of the said act payable in respect of such letters patent as last aforesaid, or in or about obtaining a grant thereof, and in lieu of all other stamp duties whatsoever, there shall be paid, in respect of such letters patent as last aforesaid on the sealing thereof stamp, duties equal to one-third part of the stamp duties which would be payable under this act, in respect of letters patent issued for the United Kingdom under the said patent law amendment act 1852, on or previously to the sealing of such letters patent as last aforesaid, and before the expiration of the third year and the seventh year respectively of the term granted by such letters patent for England, Scotland, or Ireland, stamp duties equal to one-third part of the stamp duties payable under this act before the expiration of the third year and the seventh year respectively of the term granted by letters patent issued for the United Kingdom under the said patent law amendment act 1852, and the condition of such letters patent for England or Scotland or Ireland shall be varied accordingly."

And the schedule referred to in section 2 of said act above quoted is in words and figures as follows:

The schedule of stamp duties to be paid to which this act refers:

	L.	S.	D.
On petition for grant of letters patent	5	0	0
On certificate of record of notice to proceed	5	0	0
On warrant of law officer for letters patent	5	0	0
On the sealing of letters patent	5	0	0
On specification	5	0	0
22 On the letters patent or a duplicate thereof before the expiration of the third year	50	0	0
On the letters patent or a duplicate thereof before the expiration of the seventh year	100	0	0
On certificate of record of notice of objections	2	0	0
On certificate of every search and inspection	0	1	0
On certificate of entry of assignment or license	0	5	0
On certificate of assignment or license	0	5	0
On application for disclaimer	5	0	0
On caveat against disclaimer	2	0	0
On office copies of documents for every ninety words	0	0	2

As will appear by a certified copy of said act and the schedule therein referred to and thereto attached, and to which defendant prays leave to refer when so produced.

And this defendant avers that said British letters patent numbered 1207, specified in said bill and dated April 7, 1874, were granted unto said Stewart Peters and William Donald by the United Kingdom of Great Britain and Ireland, to extend to the whole United Kingdom of Great Britain and Ireland, the Channel islands, and the Isle of Man, under the aforesaid acts of Parliament and partic-

ularly subject to the terms and provisions of said acts as above quoted and set forth, which parts of said acts were still in force throughout Great Britain long after application was made by said Peters and Donald for United States letters patent for said alleged invention.

The defendant avers that said British letters patent No. 1207 embraced, described, and claimed as the invention of said Peters and Donald all the alleged improvements embraced, described, or
23 claimed in said United States letters patent Nos. 260,232, and though said letters patent No. 1207 were nominally granted for a period of fourteen years from their date, as alleged in said bill, nevertheless they were granted subject to the provisions and conditions of said section 2 of the aforesaid act of 16 Victoria, chapter 5, and said letters patents contained, among others, the following express conditions:

Provided "if the said Stewart Peters and William Donald, their executors, administrators, or assigns, shall not pay the stamp duty of fifty pounds and produce these our letters patent, stamped with a proper stamp to that amount, at the office of our commissioners of patents for inventions before the expiration of three years from the date of these our letters patent, pursuant to the provisions of the act of the sixteenth year of our reign, chapter 5; and also if the said Stewart Peters and William Donald, their executors, administrators, or assigns, shall not pay the stamp duty of one hundred pounds and produce these our letters patent, stamped with a proper stamp to that amount, at the said office of our said commissioners before the expiration of seven years from the date of these our letters patent, pursuant also to the said act; and also if the said Stewart Peters and William Donald, their executors, administrators, or assigns, shall not supply or cause to be supplied for our service all such articles of the said invention as they shall be required to supply by the officers or commissioners administering the department of our service, for the use of which the same shall be required, in such manner, at such times, and at and upon such reasonable prices and terms as shall be settled for that purpose by the said officers or commissioners requiring the same, that then and in any of the said cases these our letters patent and all liberties and advantages
24 whatsoever hereby granted shall utterly cease, determine, and become void, anything hereinbefore contained to the contrary thereof in anywise notwithstanding."

And defendant further says that neither said patentees nor either of them, nor their executors, administrators, or assigns, nor any one for them or either of them paid said stamp duty of one hundred pounds nor produced said letters patent stamped with a proper stamp to that amount at the office of said commissioner of patents before the expiration of seven years from the date of said letters patent, as required by the condition of said letters patent and the law of Great Britain and Ireland, but that said patentees voluntarily allowed said letters patent to expire at the end of seven years from the date thereof, and that said letters patent did utterly cease, determine, and become void, and the term thereof did expire by reason of the non-payment of said stamp duty of one hundred pounds at

the expiration of seven years from the date thereof, to wit, on April 7, 1881, and said letters patent have ever since been utterly extinguished and of no force or effect whatsoever.

And defendant further says that the expiration of said letters patent was duly entered of record in said British register of patents, as required by section 34 of said patent law amendment act, 1852, above quoted, in these words, to wit:

"7th April, 1881, letters patent expired."

As will more fully appear by a duly certified copy of the entries in said register of patents relating to said letters patent, to which defendant craves leave to refer when produced.

And defendant further says that the fact that said letters patent had become void and the improvements thereon open to the public was also published to the world by the British commissioners of patents, April 15, 1881, in No. 2847 of "The Commissioners
25 of Patents Journal," in substantially these words, to wit:

"Patents which have become void in the week ending 9th day of April, 1881, through non-payment of the one-hundred-pound stamp duty.

* * * * * * *

"1207, Stewart Peters, of Glasgow, in the county of Lanark, North Britain, coppersmith, and William Donald, of the same place, plumber, for an invention of 'improvements in and connected with water-closets, and in part applicable for the supply or discharge of various liquids,' dated 7th of April, 1874."

As will more fully appear by a duly certified copy of said journal, — which this defendant craves leave to refer.

The defendant further says that said Peters and Donald did not apply for said letters patent of the United States until months after their said British letters patent No. 1207, specified in said bill, had expired, ceased, and become void and the powers and privileges therein granted had expired, and therefore said letters patent of the United States numbered 260,233 were granted without authority of law and were void from the beginning.

And, further answering, defendant avers on information and belief that said alleged improvements described and claimed in letters patent No. 260,232 or substantial and material parts thereof were introduced into public use in the United States for more than two years prior to the application for said letters patent of the United States therefor by persons whose names are not known to this defendant, but which it begs leave to set up in an amended answer when it shall have obtained more definite information thereof.

26 Defendant, further answering, says on information and belief that the said Stewart Peters and William Donald actually abandoned their alleged invention to the public before they made any application for letters patent of the United States therefor and before the execution of the assignments or either of them under which the said Huber claims to be the owner of said alleged im-

provements and said letters patent of the United States, No. 260,232, granted therefor.

The defendant denies on information and belief that James E. Boyle was the true, original, and first inventor of the apparatus covered by the original letters patent No. 291,139 or the alleged invention claimed in the reissued letters patent 10826 mentioned in said bill or any material part thereof, and this defendant says on information and belief that neither said apparatus or any part thereof, nor any alleged improvement claimed in said reissued letters patent, was an invention when produced by said Boyle, and that it was not, nor was any part thereof, and that no alleged improvement claimed in said reissued letters patent was novel at the time when produced by said Boyle.

Further answering, this defendant avers on information and belief that long anterior to the date of the alleged invention of said J. E. Boyle his alleged invention or material or substantial parts thereof had been shown and described in certain letters patent of the United Sta-es, to wit, No. 54615, granted to D. M. Shapley, of St. Louis, Missouri, May 8, 1866, for improvement in pressure heads for siphon and force pumps; No. 260,232, for improvement in water-closets, dated and granted to Henry Huber, as assignee of Stewart Peters and William Donald, June 27, 1882; No. 255,485, for improvements in water-closets, dated and granted to James E.
27 Boyle March 28, 1882; No. 72810, for an improvement in water supplies for water-closets, dated and granted to Hugh H. Craigie December 31, 1867; No. 212,133, for an improvement in valves for water-closets, cisterns, dated and granted to John Demorest February 11, 1879; No. 210,003, for an improvement in water-closets, dated and granted to William Bunting, Jr., November 19, 1878.

Further answering, this defendant upon information and belief avers that the said alleged invention or substantial and material parts thereof set forth and claimed as new in the said letters patent No. 10826 were before the pretended invention thereof by the said James E. Boyle patented in and by the following specified public letters patent of Great Britain and Ireland and described in the specification thereof officially printed and published, to wit, No. 1207, for "improvements in and connected with water-closets and in part applicable for the supply or discharge of various liquids," dated and granted to Stewart Peters and William Donald April 7, 1874, sealed October 2, 1874, and specification filed October 6, 1874, in the great seal patent office of Great Britain and Ireland.

Further answering, this defendant upon information and belief avers that the alleged invention or substantial and material parts thereof set forth or described as new in the said reissued letters patent No. 10826 were before the assumed or pretended origination or discovery thereof by the said James E. Boyle described in the following printed publications, which show that said alleged improvements were not inventions at the time they were produced by said Boyle and were not novel, to wit:

Knight's American Mechanical Dictionary, by Edward H. Knight,

published A. D. 1877, by Hurd and Houghton, at New York, New York, vol. 1, article "Aspirator," pages 169 and 170.

28 Eubank's Hydraulics and Machines, by Thomas Eubank (14th edition), published A. D. 1856 by J. C. Derby, at New York, New York; subject, "The thrombe," pages 476 and 477, and "Water raised by currents of the same liquid and the production of a vacuum by liquid currents," pages 478 to 480, inclusive.

Appleton's Mechanical Dictionary (edited by Park Benjamin and published by Appleton & Co., A. D. 1880, at New York, N. Y.), vol. 1; article, "Air pump;" subhead, "Bunson's air pump," page 48.

Scientific American Supplement No. 51; article, "An improved aspirator;" published December 16, 1876, by Munn & Co., at New York city, N. Y.

Ure's Dictionary of Arts, Manufacturers, and Mines (edited by Robert Hunt, assisted by F. W. Rudler, and printed in London, England, and published in the United States by Messrs. Longmans, Green & Co., A. D. 1875), vol. 1, 7th ed.; article, "Aspirator," pages 259 and 260.

Philosophical Magazine, page 1, published January, 1869.

Chambers' Encyclopædia (published at Philadelphia, Pa., by J. B. Lippincott & Co., A. D. 1866), vol. 8; article, "Pumps;" section 5, subheading, "The jet pump," pages 11 and 12.

Cooley's Cyclopædia of Practical Receipts (revised by Richard Tuson and published by D. Appleton & Co., at New York, N. Y., A. D. 1879), vol. 1; article, "Air pump;" subheadings, "Air pumps, Bunson's water," pages 52 and 53, and "Air pump, springles," page 53.

29 And the defendant further says on information and belief that said Boyle abandoned his said alleged invention before he made any application for letters patent thereon.

And the defendant avers on information and belief that long anterior to the alleged invention of said Boyle said alleged invention or material and substantial parts thereof were well known to and publicly used in the United States by persons whose names and residences at present are unknown to the defendant, but which it craves leave to insert in a supplemental answer when ascertained.

The defendant, further answering, denies that said original letters patent granted to James E. Boyle were surrendered for good and lawful cause; on the contrary, it alleges on information and belief that the said surrendered letters patent were not inoperative or invalid by reason of an insufficient or defective specification, but that said original letters patent were surrendered after unreasonable delay solely for the purpose of enlarging the specification and claims thereof and not to correct any error arising through inadvertence, accident, or mistake, the object and purpose of said surrender being to cover and include in and by the specification and claims of said reissued letters patent improvements not within the contemplation of said Boyle at the time of filing his original application and the receipt of his original patent, and that, as a matter of fact, said reissued letters patent do cover and include other and different alleged inventions from those claimed by said original patent and

the claims thereof, and especially the first, second, fourth, and fifth claims thereof unduly broaden the original patent; and the further design of said Boyle in asking for said reissue was to make his claim cover apparatus placed upon the market before said reissue was applied for—June 12, 1883—by Frank B. Hanson, of New York city, and issued to him November 25, 1884, and therefore
30 this defendant submits that said reissued letters patent are and should be held to be utterly void. The defendant says that said reissued letters patent of Boyle and especially the first and second and fourth claims thereof are not for any invention described, indicated, or suggested in the original letters patent on the surrender of which said reissue was granted, and the Commissioner of Patents exceeded his authority in granting said reissue and said claims are invalid and the said reissue was void from the beginning.

Further answering, this defendant denies that it is now selling, has ever sold, or intends in the future to sell, is now making or using, has ever made or used, or intends in the future to make or use any water-closets made according to or employing or containing the invention or substantial equivalents of the invention described and claimed in said letters patent sued on or either of them, or that it is now infringing, has infringed, or intends to infringe in the future upon said letters patent or either of them.

The defendant denies upon information and belief that the complainant Henry Huber has invested large sums of money or has been to great trouble in and about the said inventions, or that he has made the same useful to the public or has paid large royalties to said Boyle, or that the public has generally acquiesced in the pretended rights of said complainants, or that they have sold large numbers of water-closets and flushing apparatus as alleged.

The defendant denies on information and belief that said Boyle has granted to said Huber the exclusive right to sell throughout the United States the improvements in flushing apparatus for water-closets.

The defendant further denies on information and belief that the "Syphonia" closet, made and sold by it, is in violation of any of the rights secured to plaintiffs by said letters patent or other-
31 wise, or that any of said Syphonia closets embodies the inventions contained in both or either of the letters patent sued upon.

And the defendant, answering the interrogatories, says:

Answering interrogatory 1, the defendant says it has not.

Answering interrogatory 2, the defendant says it has not.

Answering interrogatory 3, the defendant says it has not.

Answering interrogatory 4, the defendant says it has not.

Answering interrogatory 5, the defendant says it has not.

Answering interrogatory 6, the defendant says it has not.

Answering interrogatory 7, the defendant says it has made and sold water-closets known as "Syphonia" water-closets.

Answering interrogatory 8, the defendant says the Syphonia closet made and sold by it does not embody the several features set forth

in interrogatories 2, 3, 4, 5, and 6 respectively. It declines to answer further unless compelled by the court.

Answering interrogatory 9, the defendant says no.

Answering interrogatory 10, the defendant says it does not.

Answering interrogatory 11, the defendant says on information and belief it has not made or sold any water-closets embracing the improvements patented to the plaintiff.

Wherefore this defendant humbly submits and insists that,
32 under the facts and circumstances as above alleged, the said complainants have no right to any further or other answer to said bill or any part thereof than is above given, and no right of injunction, account, or other relief prayed for in said bill of complaint, and it therefore asks to be hence dismissed, with its reasonable costs and charges in this behalf most wrongfully sustained.

In witness whereof the said defendant, N. O. Nelson Manufacturing Company, has hereunto affixed its corporate seal and caused the same to be attested by J. B. Case, its secretary.

[SEAL.] J. B. CASE, *Secretary.*

TAYLOR & POLLARD AND
BENJ. F. REX,
Solicitors and Counsel for Defendants.

STATE OF MISSOURI, }
City of St. Louis, } *ss:*

On this 29th day of December, 1887, before me personally appeared J. B. Case and made oath that he has read the foregoing answer and knows the contents thereof, and that the same is true of his own knowledge except as to matters which are therein admitted or stated to be based on information and belief, and as to these matters he believes it to be true.

GEORGE M. BLOCK,
[SEAL.] *Notary Public.*

And afterwards, to wit, on the 20th day of January, A. D. 1888, there was filed in said cause a replication in words and figures following, to wit:

(*Replication.*)

In the Circuit Court of the United States, Eastern Division of the Eastern District of Missouri.

HANERY HUBER and JAMES E. BOYLE
vs.
THE N. O. NELSON MANUFACTURING COMPANY.
} In Equity. No. 2905 of — Term, 188–.

The replication of the complainants, Henry Huber and James E. Boyle, to the answer of the defendant, N. O. Nelson Manufacturing Company.

33 These repliants, saving and reserving to themselves all and all manner of advantage of exception to the manifold insuf.

ficiencies of the said answer, for replication thereto say that they will aver and prove their said bill to be true, certain, and sufficient in the law to be answered unto, and that the said answer of the said defendant is uncertain, insufficient, and untrue; without this, that any other matter or thing whatever in the said answer contained material or effectual in the law to be replied unto, confessed and avoided, traversed and denied, is true; all of which matters and things these repliants are and will be ready to aver and prove, as this honorable court shall direct, and humbly pray as in and by said bill they have already prayed.

PAUL BAKEWELL,
Solicitor for Complainant-.

Filed January 20, 1888.

A. P. SELBY, *Clerk.*

And afterwards, to wit, on the 25th day of May, A. D. 1889, the following further proceedings were had and appear of record in said cause, to wit:

(*Decree.*)

HENRY HUBER and JAMES E. BOYLE, Complainants,
vs.
N. O. NELSON MANUFACTURING COMPANY, Defendant. } 2905.

This cause came on for hearing at this term and was argued by counsel; and thereupon, upon consideration, it was—

Ordered, adjudged, and decreed as follows:

1st. That letters patent of the United States No. 260,232, issued June 27th, 1882, to Henry Huber, as assignee of Peters & Donald, were issued without authority of law and are null and void;

2nd. That the first and second claims of reissued letters patent of the United States No. 10826 of April 19th, 1887, were granted without authority of law and are null and void;

3rd. That the defendant has not infringed any of the remaining claims of said reissued letters patent; and

4th. That the complainants' bill do stand dismissed out of this court, with costs to be taxed, and that the defendant do have and recover its costs in this case and have execution therefor.

34 And afterwards, to wit, on the 13th day of June, A. D. 1889, the following further proceedings were had and appear of record in said cause, to wit:

(*Appeal Allowed; Bond Approved.*)

HENRY HUBER *et al.*, Complainants,
vs.
N. O. NELSON MANUFACTURING COMPANY, Defendant. } 2905.

Now come the complainants, by attorney, and on motion it is ordered that an appeal be allowed said complainants from the de-

cree of this court in this cause to the Supreme Court of the United States, on complainants' giving bond in the penal sum of five hundred dollars.

And thereupon complainants present to the court their bond in the penal sum of five hundred dollars, which bond is approved by the court and ordered to be filed as part of the record herein; and it is further ordered that the clerk of this court make out and certify to the Supreme Court of the United States a full and complete transcript of the record and proceedings in this cause in this court.

Said appeal bond is in words and figures following, to wit:

Appeal Bond.

Know all men by these presents that we, Henry Huber and James E. Boyle, principals, and Paul Bakewell, as surety, are held and firmly bound unto The N. O. Nelson Manufacturing Company in the full and just sum of five hundred ($500.00) dollars to be paid to the said N. O. Nelson Manufacturing Company, its heirs, executors, administrators, or assigns; to which payment, well and truly to be made, we bind ourselves, our heirs, executors, and administrators, jointly and severally, by these presents.

Sealed with our seals and dated this 13th day of June, in the year of our Lord one thousand eight hundred and eighty-nine.

Whereas lately, at the March term, 1889, of the circuit court of the United States for the eastern division of the eastern judicial district of Missouri, in a suit depending in said court between Henry Huber and James E. Boyle, complainants, and The N. O. Nelson Manufacturing Company, defendant, a decree was rendered against the said Henry Huber & James E. Boyle, complainants, and the said Henry Huber and James E. Boyle, complainants, having ob-
35 tained an appeal of the said court to reverse the decree in the aforesaid suit, and a citation directed to the said N. O. Nelson Manufacturing Company, citing and admonishing it to be and appear at a Supreme Court of the United States to be holden at Washington the second Monday of October next:

Now, the condition of the above obligation is such that if the said complainants shall prosecute said appeal to effect and answer all damages and costs if they fail to make good their appeal, then the above obligation to be void; else to remain in full force and virtue.

Sealed and delivered in presence of—

HENRY HUBER AND JAMES E. BOYLE,
By PAUL BAKEWELL, *Their Attorney.* [SEAL.]
PAUL BAKEWELL. [SEAL.]

Approved by—
AMOS M. THAYER, *Dist. Judge.*

Endorsed: "No. 2905. United States circuit court, eastern division of the eastern judicial district of Missouri. Henry Huber & James E. Boyle *vs.* N. O. Nelson M'f'g Co. Bond, $500.00. Huber

& Boyle, principals. Paul Bakewell, surety. Filed 13th day of June, 1889. A. P. Selby, clerk."

36 In the Circuit Court of the United States for the Eastern Division of the Eastern Judicial District of Missouri.

HENRY HUBER and JAMES E. BOYLE
vs.
N. O. NELSON MANUFACTURING COMPANY. } In Equity. No. 2905.

Opinion.

This was a bill filed to restrain the infringement of letters patent of the United States No. 260,232, issued June 27th, 1882, to Henry Huber, assignee of Peters & Donald, as well as to restrain the infringement of reissued letters patent No. 10826, issued April 19th, 1887, to James E. Boyle. Both patents are for improvements in sanitary water-closets.

Huber is owner of patent No. 260,232 and sole licensee under reissued letters patent No. 10826.

PAUL BAKEWELL,
Solicitor for the Complainant-.

TAYLOR & POLLARD AND
BENJAMIN F. REX,
Solicitors for the Defendants.

37 *Opinion*

MAY 25TH, 1889.

THAYER, *district judge:*

This case has bean elaborately argued. Following the course that was pursued by counsel in the argument, the first question for consideration is whether letters patent No. 260,232, issued to Henry Huber as assignee of Peters & Donald are valid.

The facts in the light of which that question must be determined are not disputed. Peters & Donald are residents of Great Britain. They secured a patent in England on April 7th, 1874, for the same invention covered by American letters patent No. 260,232. On April 7th, 1881, the English patent by virtue of English laws became null and void on account of the failure of the patentees to pay the stamp duty of 100 pounds which became due on the patent on that day. On November 29th, 1881, they filed an application for a patent for the same invention in the United States, and a patent was subsequently granted to Henry Huber as their assignee on June 27th, 1882. Peters & Donald appear to have assigned all their interest in the invention for a nominal consideration to J. E. Boyle on the 27th of October, 1881, some six months after the English patent had lapsed and become void, and Boyle in turn assigned his interest to Huber on November 26th, 1881.

Can a patent issued under such circumstances be sustained as a valid grant?

The precise question, so far as I am aware, has never been decided in a case arising under the 25th section of the act of July 8th, 1870, now section 4887, Revised Statutes of the U. S.

38 In several cases, however, where a foreign patent had been issued for a given term expressed on the face of the grant, but with a privilege under the foreign law of being extended for a further period, the question has arisen whether the life of the subsequent American patent was limited by the term expressed on the face of the foreign patent in force when the American patent was issued, or whether the American patent continued during the actual existence of the foreign patent, the same having been extended or renewed.

Reissner *vs.* Sharp, 16 Off. Gaz., 355.
Bate Refrigerator Co. *vs.* Gillett, 13 Fed. Rep., 553.
Gramme Electrical Co. *vs.* Arnoux & Hochhausen Electrical Co., 17 Fed. Rep., 838.

In another class of cases the question has arisen whether the termination of a foreign patent prior to the time specified on the face of the grant by the failure of the patentee to comply with some requirement of the foreign law had the effect of terminating a subsequently issued American patent for the same invention.

Paillard *vs.* Bruno, 29 Feb. Rep., 864.
Bate Refrigerating Co. *vs.* Gillett, 31 Fed. Rep., 809.
Holmes Electrical Protective Co. *vs.* Metropolitan Burglar Alarm Co., 21 Fed. Rep., 468.

The decisions of all the circuit courts in the cases above mentioned proceeded consistently upon the theory first outlined by Mr. Justice Clifford in Henry *vs.* Providence Tool Co., 3rd Banning & Arden, 501, a case in which the court was dealing with an American patent granted after an English patent that had been ex-

39 tended for four years after its expiration by special order of the crown. The theory thus outlined was in substance that every American patent ought to run for a definite period that may be ascertained as soon as the patent issues, and that Congress did not intend by section 4887 of the Revised Statutes that patents should be granted for an uncertain period. In accordance with that view it was held in substance in Henry *v.* Providence Tool Company, and in the subsequent decisions that the life of an American patent subject to the provisions of section 4887 is limited by the term expressed on the face of the prior foreign patent having the shortest term, and that the existence of the domestic patent when issued is not affected by any events that subsequently shorten or prolong the life of the foreign patent.

Three of the cases above cited were expressly overruled by the recent decision of the U. S. Supreme Court in Bate Refrigerating Co. *vs.* Hammond, 129 U. S., 151, and, in my judgment, the decision in that case overturns as well the principle on which the other circuit court decisions were predicated.

The Supreme Court has clearly discarded the doctrine that an

American patent must necessarily have a fixed term which may be definitely ascertained at the time letters patent are granted by holding (as in the cases cited) that the duration of an American patent is dependent upon circumstances that affect the duration of the foreign monopoly. Thus the court say: "Under sec. 4887, although * * * the United States patent may on its face run for seventeen years from its date, it is to be so limited by the courts as a matter to be adjudicated on evidence in pais, as to expire at the same time with the foreign patent;" and, again: "Under this view the
40 time of the expiration of the foreign patent may be shown by evidence in pais, whether the record of the foreign patent itself shows its duration, or other proper evidence; and it is no more objectionable to show the time of the expiration of the foreign patent by giving evidence of extensions such as those in the present case, and thus show the time when by virtue of such extensions the United States patent will expire."

In accordance with such views the court held that although an American patent had been granted subsequently to the issuance of a Canadian patent, which on its face purported to be a grant "for the period of five years," yet that the American patent did not expire at the end of the five years so limited, inasmuch as the patentee, in compliance with Canadian law, obtained an extension of the foreign patent for two additional terms of five years each after the grant of the American patent.

The arguments used in the course of that decision lead logically to the conclusion that United States letters patent issued subject to the provisions of section 4887 remain in force no longer than the foreign patent having the shortest term; that the life of the domestic patent is measured by the actual duration of the foreign patent, and may be abridged as well as lengthened by circumstances which operate under the foreign law to abridge or lengthen the foreign monopoly.

When it is conceded that it is not essential that the life of an American patent shall be absolutely fixed at its inception, as by the term expressed on the face of the foreign grant having the shortest term, but may extend beyond that period in consequence of the extension of the foreign patent by acts in pais done by the
41. patentee in compliance with the foreign patent law—that is a concession that the duration of the domestic patent is dependent in one respect on the life of the foreign patent, and if dependent upon it in one respect it ought to be regarded as dependent upon it in all respects. At all events, if acts done by the patentee in conformity with the foreign law operate to extend the foreign patent beyond the term specified on the face of the original grant, and thereby to prolong the American patent by parity of reasoning and omission to do acts required by the foreign law, which works an absolute forfeiture of the foreign grant, ought to extinguish the domestic patent.

No valid reason can be assigned, I apprehend, why the omission of acts required to be done by the foreign law in order to preserve the life of the foreign patent should have no effect on the duration

of an American patent issued under section 4887, so long as acts done by the patentee in compliance with the foreign law are allowed to give the American patent a duration that it would not otherwise have. The whole controversy seems to hinge on the question whether the term of the domestic patent is fixed at its inception by the terms expressed on the face of the shortest foreign patent or whether the life of the American patent may be to an extent uncertain and is subject to contingencies affecting the life of the foreign patent. The Supreme Court of the United States appear to have adopted the latter view. It follows, of course, that if the true construction of section 4887 is that a patent subject to its provisions becomes void when the foreign patent lapses—in other words, if the life of the domestic patent is dependent upon that of the foreign patent—then the Commissioner of Patents has no authority under section 4887 to issue American letters after the foreign patent has ceased or determined.

42 It would hardly be contended, I suppose, that the Commissioner would be authorized to grant a monopoly of an invention after an event has occurred that in law determines the duration of the monopoly, and which event, if it had occurred after the grant was made instead of before, would at once have rendered the same void.

Commissioner Fisher, in the case of Mushet, 2nd Commissioner's Decisions, 106, shortly after the passage of the act of July 8th, 1870, held that section 4887 was intended to allow foreign inventors to secure a monopoly of their inventions in this country after they had been patented abroad, but only for so long a period as the foreign monopoly continued, and that to a casual reader would seem to be the obvious purpose of the statute. The last clause of the section, "but every patent granted for an invention which has been previously patented in a foreign country shall be so limited as to expire at the same time with the foreign patent, &c.," presupposes, as I think, that there is a foreign patent for the invention in force when the American patent issues, the actual existence of which foreign patent is to determine the duration of the domestic patent. If there is no such foreign patent in force when the American patent issues, but if a foreign patent has been theretofore granted for the invention and it has lapsed and become void, there is no authority in law, in my opinion, for the American grant.

The result is that the Peters & Donald patent is adjudged to be void.

2nd. The next question concerns the validity of reissued letters patent No. 10826, issued to James E. Boyle April 19th, 1887, and the facts on which that controversy depends are substantially undisputed.

43 The original patent on which the reissue was obtained was numbered 291,139 and was dated January 1st, 1884. In the construction of the "flushing apparatus" or water-closet covered by the original letters Boyle, the inventor, employed what is commonly called an "injector" to exhaust the air confined between two traps located beneath the bowl or seat of the "flushing appa-

ratus." The apparatus was so arranged that when in use water falling through a pipe from the water-tank or reservoir into the bowl passed by the mouth of the "injector," which was connected by a pipe with the confined air chamber between the traps, and by the operation of a well-known principle tended to exhaust the air and to create a vacuum in such chamber, the purpose of creating a vacuum being to induce a more powerful outflow of water from the bowl through the traps and into the soil pipe by the aid of atmospheric pressure on the surface of the water in the bowl.

The idea of constructing a water-closet or flushing apparatus with double traps underneath the seat and a confined air chamber between the same from which the air might be withdrawn when the closet was used so as to induce a more powerful outflow was not novel. The same method of construction was shown in the Peters & Donald patent before mentioned, but Peters & Donald employed a different device to exhaust the air between the traps. Although injectors and the principle upon which they were operated were well known, and although they were in use for various purposes, it may be conceded that Boyle was the first to employ them in the construction of a flushing apparatus or water-closet. Being an old device, he could not claim the injector, independently or otherwise, than in combination with other devices forming a part of his
44 improved sanitary water-closet. The first and most important claim in the original letters patent was for "a flushing apparatus consisting of a reservoir tank, a flushing chamber adapted to be filled therefrom, a valve controlling the admission of water from said tank to said chamber, a suction injector arranged beneath the outlet from said chamber, a flushing pipe leading from said injector, and a suction or air pipe communicating with said injector, all combined * * * substantially as set forth, whereby the water, in escaping from said chamber into the flushing pipe, traverses said injector and sucks air from said suction pipe."

It will thus be seen that the "injector" was one of six elements in the combination covered by the first claim of the original letters, No. 201,139.

On January 2nd, 1885, Boyle made application for a reissue, stating in substance in his application therefor that his patent was "inoperative to protect the invention intended to be covered by it," because "the principal claims in said patent were defective or insufficient in that they appear to be limited to combinations embodying the flushing chamber as an essential element, whereas that chamber was not essential to his invention in its generic features;" that he believed he had introduced a new principle for operating double-trapped siphon closets, namely, that of producing a vacuum by causing falling flushing water to act as an injector, but "that, through inadvertence or mistake of judgment, his claims were drawn with less breadth than his specifications and did not, as they should, cover broadly the application of such principle;" that "such inadvertence or mistake arose by and in consequence of a misunderstanding between" the inventor and his patent solicitor and by

reason of "the inventor's want of familiarity with the technical meaning of the language used in patent claims."

45 It is admitted that the idea of obtaining a reissue was suggested by the granting of letters patent No. 308,358 to Frank B. Hanson, under date of November 25th, 1884, for an improvement in water-closets, which letter- patent by one of its claims covered a flushing apparatus the same substantially as that described in the first claim of the Boyle patent, above set forth, omitting only the "flushing chamber."

Boyle's sole purpose in asking for a reissue was confessedly to eliminate the "flushing chamber" as a constituent element of the combination covered by certain claims of his original patent, particularly the first claim. In other words, he desired to recast his claims so as to obtain a patent for a flushing apparatus like that described above in the first claim minus the flushing chamber. A reissue was eventually granted in accordance with such desire. A claim was allowed in the reissued letters for "a flushing apparatus * * * consisting of the combination of a reservoir tank, a flushing valve controlling the outlet thereof, a flushing pipe for conveying water therefrom to the bowl of the closet, a suction injector arranged in connection with said pipe and to be traversed by the descending flushing water, and a suction pipe in connection with said injector, whereby the water in flowing from said tank downward through the flushing pipe traverses said injector and sucks the air from said suction pipe."

The effect was clearly to expand the claims of the original patent by as much as the addition of the flushing chamber to the combinations claimed in the original patent had served to limit them.

Pattee Plow Co. *vs.* Kingman, 129 U. S., 294.

46 Notwithstanding the expansion of the claims in the reissue, it is strenuously insisted that the main feature of Boyle's flushing apparatus (that which was essentially novel) consisted in the use of an injector operated by falling flushing water to pump air from between the two traps; that such fact was clearly shown and commented upon in the original specification; that the flushing chamber was not essential to the operation of that device, a single reservoir tank being sufficient for that purpose; that by inadvertence or mistake a non-essential limitation was put upon the claims of the original patent that covered the injector device; that in consequence thereof the original patent was inoperative to fully secure the invention intended to be claimed, and that the patent was for such reasons properly reissued, it being a case where the claims have simply been altered to cover more accurately the invention described in the original specification.

Some of these propositions require careful consideration, and, in the first place, it will be well to understand clearly what is meant by the assertion that the original patent was "inoperative to protect the invention intended to be covered by it."

The original patent certainly protects the flushing apparatus that was claimed as a whole in the first claim and carefully described in

the drawings. It also protects all the combinations claimed in the several claims of the original patent. It was not necessary to change a word in the specification or alter a line in the drawings to fully secure the apparatus so claimed, and it appears that that was the identical flushing apparatus or water closet which the patentee intended to manufacture and that his licensee is now manufacturing. It cannot be said, therefore, that the original patent was "inoperative or invalid" in the sense that what the patentee claimed
47 and intended to manufacture he cannot hold in consequence of the original specification being either "defective or insufficient." In the light of these facts when the patentee asserts that the original patent was "inoperative," no more is meant than that a particular combination of parts might have been claimed originally (and possibly would have been allowed) that was not claimed, and that the original patent was inoperative to protect that particular combination because no right to protection was asserted.

Now, even conceding, for the purpose of the decision, that the original patent was "inoperative" in the sense in which that word is used in section 4916 of the Revised Statutes, which authorizes a reissue, the question remains whether the failure of the inventor to claim what the original patent does not protect because it was not claimed was due "to inadvertence, accident, or mistake" in the sense of the statute.

All of the evidence that was before the Commissioner tending to show inadvertence or mistake (such as the affidavit of the inventor and his solicitor and other documents) was offered by the complainant in the present case and was supplemented by some additional testimony.

Under such circumstances I understand the law to be that the court may review the finding of the Commissioner on the point that the original patent was inoperative by reason of inadvertence and mistake, at least to the extent of determining whether, as a matter of law, what was described and alleged to be a mistake is such a mistake as will warrant a reissue.

Miller *vs.* Brass Co., 104 U. S., 355.
Leggett *vs.* Avery, 101 U. S., 256.
48 Mahn *vs.* Harwood, 112 U. S., 359.
Coon *vs.* Wilson, 113 U. S., 277.
Turner & Seymour Co. *vs.* Dover Co., 111 U. S., 319.

In his affidavit filed with the Commissioner Mr. Fraser, the solicitor who obtained Boyle's original patent as well as the reissue, describes the mistake alleged to have been committed by him and the patentee as tersely, perhaps, as it is anywhere described. He says: "Deponent clearly understood that the invention in question introduced a new principle in water-closet flushing apparatus, that of exhausting the air by means of an injector, and so described the invention in the specification, but that in drawing the claims he inadvertently incorporated the flushing apparatus as an element therein, being at the time under the impression that the said flushing chamber was essential to the operation of the invention, whereas

in fact the said chamber is essential only to the operativeness of the devices for producing the 'after wash' for refilling the bowl, which devices are claimed specifically in claim four of said patent."

It will be observed that the mistake thus described by Mr. Fraser consisted in his being under the impression when he drew the claims of the original patent that "the flushing chamber was essential to the operation of the invention, whereas it was essential only to the operativeness of the devices for producing the after wash."

This statement is a little obscure, because he does not explain whether by the use of the word "invention" in the paragraph quoted he means the injector device only or the flushing apparatus considered as a whole. I take it for granted, however, that Mr. Fraser did not use the word "invention" in the restricted sense first mentioned and would not be so understood.

49 He is evidently an expert of too much experience to assert that he — ever actually for a moment under the mistaken impression that it was necessary to employ a "flushing chamber" as well a "water tank," in order that the falling flushing water traversing the injector might operate to suck or pump air from between the two traps, and that was the sole function of the injector device. Drawing No. 6 attached to the original patent and Mr. Frazer's explanation of the purpose of that drawing contained in the original specification shows that he clearly understood that the falling flushing water traversing the injector would perform its function of pumping air from between the traps equally well whether the water proceeded from a reservoir having one compartment or a dozen, and that fact was obvious to an ordinary observer who had any knowledge of the principle upon which an injector acts.

Therefore in the paragraph quoted Fraser must be understood as asserting merely that he incorporated the "flushing chamber" as an element in the several combinations claimed in the original patent because he desired and intended to describe and claim an operative flushing apparatus or water-closet—that is to say, one that would do the work required of such an apparatus and prove a marketable invention.

It is manifest from other statements made by Mr. Fraser in the course of his testimony that in his opinion a flushing apparatus minus the "flushing chamber" with its attendant devices for securing an after wash would be practically useless; that some provisions for refilling the bowl after the injector had ceased to act, thereby sealing the upper trap, was essential to the successful operation of the flushing apparatus or water-closet considered as a whole, and

50 that in drafting the several claims of the original patent he intentionally (and with great care, as it would seem) included the flushing chamber for the reason that it was one of the essential parts of the flushing apparatus without which the apparatus would not be serviceable.

Boyle's affidavit filed with the Commissioner describes no mistake, inadvertence, or accident.

He contents himself with the general statement that a misunderstanding existed between him and his solicitor, but what the mis-

understanding was does not appear. From his testimony on the trial of this case it is made manifest, however, that he as well as Fraser was of the opinion when the original patent was granted that a flushing apparatus constructed according to his design, but without the flushing chamber to secure an after wash, would be practically valueless because it would command no sale. He admits that he made a flushing apparatus such as is last indicated (that is, an apparatus minus the flushing chamber); that it was not satisfactory; that it was not intended to be operative, and (as I understand him) was never indended as a design for a water-closet that he expected to manufacture or sell.

The result is that if Boyle and Fraser made any mistake or labored under any misapprehension when the original patent was taken out it consisted in the assumption that the omission of the flushing chamber on which the "after-wash" devices depended and without which there was no means of securing an after wash automatically, so far as the patentee had then discovered, would leave a practically valueless combination, and hence that there was no need of claiming such a combination.

When the statements of Mr. Boyle and his patent solicitor
51 are carefully and fairly analyzed that appears to be all that can reasonably be said in support of the contention that the claims of the original patent were due to inadvertence and mistake.

But, conceding that the parties named acted on the assumption last stated, it does not appear that even that assumption was erroneous. On the contrary, the testimony shows to my entire satisfaction that Fraser was right in supposing that Boyle's flushing apparatus without the flushing chamber would be incomplete and for that reason practically valueless.

Mr. Hanson, who, subsequently to the date of Boyle's invention, secured a patent on a water-closet having a single water reservoir and an injector, but no flushing chamber or provision for an after wash, and who by so doing caused Boyle to apply for a reissue that would invalidate Hanson's patent, is compelled to admit that a water-closet constructed according to the specification of his patent is defective and unsaleable, and for that reason has never been put upon the market.

Boyle, Hanson, and Fraser substantially agree that some mechanism to secure an after wash automatically (that is to say, some mechanism to flush the closet and refill the bowl at the end of the flush by a single pull at the lever) is essential to the successful operation of a flushing apparatus; that without such mechanism an apparatus constructed with double traps and an injector to exhaust the air between the traps would be useless in the sense that there would be no demand for such an apparatus.

It would seem, indeed, that Boyle displayed quite as much (if not more) ingenuity in devising the mechanism to produce an after wash as in employing an injector, which was an old device, to pump air from between the traps.

52 Now, in the case of Mahn *vs.* Harwood, 112 U. S., 359 & 360, it was said that "a patent for an invention cannot lawfully be reissued for the mere purpose of enlarging the claim, unless there has been a clear mistake inadvertently committed in wording the claim," and the same remark is repeated in Coon *vs.* Wilson, 113 U. S., 277. In Miller *vs.* Brass Co., 104 U. S., 355, the court said: "Whilst * * * we do not deny that a claim may be enlarged in a reissued patent, we are of the opinion that this can only be done when an actual mistake has occured, not from mere error of judgment, * * * but a real *bona fide* mistake inadvertently committed, such as a court of chancery in cases within its ordinary jurisdiction would correct."

So far as I can see, the testimony in the case does not tend to establish that either Boyle or Fraser acted so inadvertently or labored under any such misapprehension, either of matters of law or fact, when the claims of the original patent were formulated as justified a reissue of the patent under the law as declared in these cases.

It was obvious to them, as it is to any one, that the injector would perform its function as well with a single water tank as with a tank and flushing chamber combined. They both believed that a water-closet constructed according to Boyle's design, but without provision for an after wash, would be valueless in the market, and in that they were right. The patentee had discovered no method of producing an after wash automatically by using a single water tank, and hence both he and his solicitor regarded the flushing chamber as one of the essential features of the flushing apparatus intended to be manufactured, and accordingly claimed it industriously in all of the important claims.

53 Conceding that they claimed the "injector" in combination with a part that was non-essential to its operation, and thereby limited the claim, yet they did so in pursuance of a well-defined purpose that was not based upon a misconception of matters of fact or ignorance of the law, so far as the records before the Commissioner or the proof in this case shows.

It is an important fact that must be kept in mind in the consideration of this case that the injector was an old device when Boyle adopted it, and that it could only be claimed in combination with other parts which would together produce a new result or effect or constitute a new machine.

Reckendorfer *vs.* Faber, 91 U. S., 357.

Boyle placed it in combination with certain other old parts or devices that he deemed necessary to employ to make a new flushing apparatus that would be operative and useful, and by so doing made each element of the combination material, and was undoubtedly entitled to be protected in the use of the combination so formed and claimed.

Water Metre Co. *vs.* Desper, 101 U. S., 337.

His sole purpose in asking for a reissue, however, appears to have been to slough off one element of the combination and so reduce the

parts embraced in the claim that it would be impossible for any other person to use an "injector" in the construction of a double-trapped water-closet without paying tribute to his patent.

As the claims are stated and enlarged in the reissue, it would be unlawful for a mechanic to use the injector in the construction of a flushing apparatus, even if he should succeed in doing what Boyle failed to accomplish—that is to say, in producing an after
54 wash automatically by the use of a single tank—because the parts with which the injector has been combined in the claims of the reissue are so few that they must necessarily all be used to work the injector. In other words, the claims in the reissued letters, or some of them, at least, are now so broad as to practically cover the injector as a thing susceptible of being separately claimed.

If it was new and had not been claimed in the original patent it might be proper to interpret the law liberally in favor of the inventor to enable him to realize the full benefit of his invention. The fact is, however, that an injector is an old device, and that Boyle merely adopted it and applied it to a new use, and should be limited to that combination in which, as it appears, he deliberately placed it and claimed it.

Prouty & Mears *vs.* Douglass, 16 Peters, 341.
Eames *vs.* Godfrey, 1 Wall., 79.

I am forced to the conclusion that the reissued letters granted under the circumstances and for the purposes heretofore stated—that is, merely to enlarge the claims—cannot be sustained as a valid grant.

Burr *vs.* Duryee, 1 Wall., 531.
Gill *vs.* Wells, 22 Wall., 1, and cases heretofore cited.

In the first place, although the original patent was inoperative to protect a particular combination not claimed therein, to which the inventor now conceives himself to be entitled, yet the failure to claim it was not due to any such inadvertence or mistake as will now entitle him to claim it, the inevitable result being to expand the old claims; and, secondly, the failure to claim such com-
55 bination originally, even if it was one that ought to have been allowed if claimed, occurred under such circumstances and was accompanied with such full knowledge of all material facts as amounted to an abandonment of that particular combination to the public.

The bill is accordingly dismissed.

56 In the Circuit Court of the United States in and for the Eastern Division of the Eastern District of Missouri.

HENRY HUBER and JAMES E. BOYLE, Complainants,
vs.
THE N. O. NELSON MANUFACTURING COMPANY, Defendant. } In Equity.

Stipulation.

It is stipulated by and between counsel for complainants and counsel for defendant in the above-entitled cause that all exhibits introduced in evidence by complainants or defendant in this cause may remain in the possession of the party introducing them in evidence until final hearing, subject, however, to this understanding: In case either party notify the other party in writing by ten days' notice that it or they desire to have any or all of the exhibits introduced in evidence by the other party filed in the clerk's office of this court, the party so notified will comply with this request.

It is further stipulated by and between counsel for complainants and counsel for defendant in the above-entitled cause that defendant may offer in evidence printed ten-cent Patent Office copies of all United States letters patent referred to in the answer in this
57 case, with the understanding that such ten-cent Patent Office copies of United States letters patent will have the same force and effect in evidence as if they were the originals of the said United States letters patent or duly certified copies of the same.

It is further stipulated that the bowl marked "Complainants' Exhibit Defendant's Bowl" and the tank marked "Complainants' Exhibit Defendant's Tank" were made and sold by defendant at the city of St. Louis, State of Missouri, prior to the date upon which the bill of complaint was filed in this cause, and that prior to the said date defendant has made and sold bowls and tanks similar in construction and method of operation to the said bowl and tank marked respectively "Complainants' Exhibit Defendant's Bowl" and "Complainants' Exhibit Defendant's Tank."

PAUL BAKEWELL,
Solicitor for Complainants.
B. F. REX,
Solicitor for Defendant.

St. Louis, February 17, 1888.

58 In the Circuit Court of the United States in and for the Eastern Division of the Eastern Judicial District of Missouri.

HENRY HUBER *et al.*, Complainants,
vs.
THE N. O. NELSON MANUFACTURING COMPANY, Defendant. } In Equity.

To Messrs. Taylor & Pollard & B. F. Rex, solicitors for defendant:

Please take notice that on Wednesday, the 22d day of February, 1888, at 11 o'clock a. m., we shall proceed to take testimony, under the 67th rule in equity as amended, on behalf of complainant, to be used upon the hearing of the above-entitled cause, at the office of Arthur C. Fraser & Co., room No. 135 Temple court, No. 5 Beekman street, New York, N. Y., before Benjamin C. Fairchild, special examiner, appointed in this cause, the witnesses whose testimony we propose to take under this notice being James E. Boyle, of Brooklyn, N. Y.; Arthur C. Fraser, of Brooklyn, N. Y.; Adolph C. Tiedemann, of New York city, N. Y., and Henry Huber, of New York city, N. Y.

59 The taking of testimony will continue from day to day until completed.

PAUL BAKEWELL,
Solicitor for Complainants.

St. Louis, Mo., Feb. 18, 1888.

Service of the above notice by copy acknowledged this 18th day of February, 1888, and all exception as to time waived.

TAYLOR & POLLARD &
B. F. REX,
Solicitors for Defendant.

Evidence for complainants taken pursuant to the sixty-seventh rule of the Supreme Court of the United States, in equity, as amended, before me—

BEN. L. FAIRCHILD,
Special Examiner.

60 In the Circuit Court of the United States for the Eastern Division of the Eastern District of Missouri.

HENRY HUBER and JAMES E. BOYLE, Complainants,
vs.
THE N. O. NELSON MANUFACTURING COMPANY, Defendants. } In Equity.

NEW YORK, *February* 22, 1888.

Present: Arthur S. Browne, Esq., of counsel for complainants, and Seneca N. Taylor and B. F. Rex, of counsel for defendant.

Deposition of Arthur C. Fraser.

ARTHUR C. FRASER, being duly sworn, testifies as follows:

Direct examination by ARTHUR S. BROWNE, of counsel for complainants:

Interrogatory 1. What is your name, age, residence, and occupation?

Answer. Arthur C. Fraser; age, 29; residence, 226 Quincy street, Brooklyn; occupation, that of solicitor of patents and patent expert.

Int. 2. How long have you been occupied in the business of patent solicitor and as an expert?

61 Ans. I have been practicing as a solicitor of patents for about thirteen years past, and during a greater part of that time have done more or less expert work, more particularly during the last two or three years.

Int. 3. Are you familiar with patents and inventions in relation to the subject of water-closets?

Ans. Yes; in the practice of my profession I have had occasion to examine a great many different inventions in that line and I have examined and analyzed numerous patents for water-closets and tanks therefor of various kinds.

Int. 4. Are you familiar with that class of water-closets known as pneumatic vacuum or siphon closets?

Ans. Yes; I have given especial study and attention to closets of the siphon type, and believe that I am familiar with all the constructions thereof that are in use and with all the more important patents thereon.

Int. 5. Have you, in your capacity as patent solicitor, obtained any patents for pneumatic closets?

Ans. I have prepared and presented applications for and obtained several patents for closets of that character.

Int. 6. Have you obtained patents for Messrs. Henry Huber and James E. Boyle, the complainants in this action?

Ans. I have obtained several patents for James E. Boyle. I believe that all of his applications for patents for pneumatic closets have been prepared and conducted by me. Mr. Huber is licensee under these patents, and to the extent of his interest in them I have acted for him in obtaining those patents, but I have procured no patents for him as an inventor.

By Mr. TAYLOR: The answer as to Mr. Huber being licensee is objected to on the ground that it can be proven only by documentary evidence and not by statement or conclusion of witness, and notice is given that counsel moves to expunge from the record all the testimony as to Mr. Huber being the licensee.

62 Int. 7. Are you familiar with the letters patent of the United States, No. 260,232, granted June 27th, 1882, to Stewart Peters and William Donald as inventors, and also with re-

issued letters patent No. 10826, granted April 19th, 1887, to James E. Boyle; and, if so, do you understand the inventions therein shown and described?

Ans. Yes; I am familiar with the patents and understand the inventions.

Certified copies of the patents above referred to are hereby offered in evidence by counsel for complainants and marked respectively "Complainants Exhibits 1 and 2."

Int. 8. To what class of water-closets do the inventions described in these patents belong and what was the state of the art in reference to the same at the dates of their grant?

Ans. These patents both describe inventions belonging to the class of pneumatic siphon water-closets, as distinguished from simple siphon water-closets. In explaining the state of the art I will consider the two patents separately, taking the earlier one, namely, the Peters and Donald, first.

The Peters & Donald invention was, to the best of my knowledge, the pioneer in the class of pneumatic siphon closets. Prior to the invention of Peters & Donald siphon closets had been devised wherein a simple siphon was connected with the water-closet bowl as a portion of the soil passage leading from the outlet of the bowl to the sewer. From the outlet of the bowl the soil passage extended upwardly to form the short leg of the siphon and to a height sufficient to retain water in the bowl to the desired depth above the outlet, and in order to form a trap or water seal between the bowl and the sewer. From the upper part of this short leg the soil passage extended downwardly as a closed or sealed passage to a level somewhat below that of the outlet from the bowl in order to form the long leg of the siphon. In the operation of a closet such
63 as I have just described the bowl is flooded with flushing water introduced through a flushing pipe in the usual way, thereby raising the level of water in the bowl to above the normal, whereupon an outflow commences through the trapped soil passage or siphon, and by the descent of the water falling over from the short leg and down through the long leg of the siphon the air in the latter is carried partially along with the water, thereby producing a rarification or suction or partial vacuum, which acts to draw the water over from the short leg, and eventually becomes sufficient to cause a rapid outflow through the bowl and siphon, whereby the water is carried out of the bowl with a rush, so that the solid matters are drawn out with it. At the same time, by the continuance of the inflow of flushing water, the bowl is cleansed and the outflow continued for a time, until finally, the outflow having become more rapid than the inflow, the water in the bowl is drawn so low as to unseal the trap and admit air to pass from the bowl into the siphon, thereby restoring, or partially so, the atmospheric pressure in the long leg of the siphon, or (to use the technical expression) "breaking the vacuum" therein, whereupon the outflow ceases and the continuance of the inflow of the flushing water for a short time thereafter suffices to refill the bowl. In siphon closets of this class the

action is somewhat sluggish, a considerable time elapsing before the siphonic action becomes sufficiently energetic to create an outflow from the bowl strong enough to carry with it the solid matter therein. The necessity of flooding the bowl above the normal level is also a disadvantage. To render the action more prompt jets of water have been resorted to, directed into the siphon, in order to assist the flow therethrough, such jet or jets having been taken by a branch from the flushing pipe.

Peters & Donald, by their invention, disclosed in this United States patent "Complainants' Exhibit 1," accomplished this purpose in another way. They formed a second trap in the soil passage beneath the first or upper trap, by which water is retained in the bowl, thereby forming a confined air space in the soil pipe
64 or passage between the two traps; they also provided means for exhausting the air to some extent from this confined air space, thereby creating a partial vacuum therein and consequently drawing the water from the upper trap over the dam or lip at the top of the short leg thereof and causing it to fall down through the confined air space to the second trap. By this means an outflow from the bowl and through the upper trap could be started before any flushing water was introduced to the bowl. By causing the flushing water to enter the bowl at or about the time of starting this outflow the outflow could be maintained for a duration of time depending upon the rapidity of the inflow of flushing water relatively to the rapidity of the outflow from the bowl. The action of the partial vacuum in the air space between the two traps was to start the operation of the siphon, since, as soon as the outflow was started by the vacuum, the siphonic action due to the suction created by the descending water in the long leg of the siphon necessarily commenced, thereby continuing the outflow until the breaking of the siphon by the entrance of air from the bowl into the long leg or confined air space. Upon this breaking of the siphon the outflow would cease the same as in the case of a simple siphon closet as first described unless the air-exhausting agency were to continue its action of drawing air from the confined air space, in which case as soon as sufficient flushing water had run into the bowl after the breaking of the vacuum to reseal the upper trap the first operation would be repeated and the outflow from the bowl maintained without other interruption than the retardation due to the breaking of the vacuum. By a sufficiently long continuance of the operation of exhausting air from the confined air space the operation of starting the siphon and breaking the vacuum may be repeated an indefinite number of times, it being, of course, necessary to continue the inflow of flushing water to the bowl for an equally long duration. In such case the operations of starting the siphon and breaking the vacuum, which I have referred to as being repeated, are not neces-
65 sarily intermittent, but by a suitable proportioning of the respective inlet and outlet waterways these operations may be substantially continuous, the flushing water being sucked out of the bowl and carried down the siphon as fast as it enters and air being drawn from the bowl at the same time.

The Peters & Donald invention dates, I believe, from the year 1874, in which year Peters & Donald obtained an English patent, No. 1207, dated April 7th, 1874.

I have here a certified copy of the letters patent and a certified copy of the "Blue Book" thereof, including the specification and drawing.

The patent and "Blue Book" referred to by the witness are hereby introduced in evidence by counsel for complainants and marked respectively "Complainants' Exhibits 3 and 4."

Peters & Donald's English patent includes a number of inventions or improvements aside from this one, this invention being illustrated in Fig. 1 thereof. In this figure the construction of bowl shown has a bottom outlet of small area, being approximately that of the soil passage, the closet being of what is known as the Hopper order. In the more improved closets of the present day the bowl is so shaped as to offer a more extended water surface for the reception of the soil.

Recurring to Peters & Donald's invention, the apparatus for exhausting the air from the confined air space within the two traps consists of a special construction of overhead tank, the tank being what may be called a pneumatic tank. I have here a drawing showing the Peters & Donald closet somewhat more clearly than is shown in either their English or United States patent.

Drawing produced by witness introduced in evidence and marked "Complainants' Exhibit No. 5."

In this drawing one of the figures shows the closet at rest and the other shows it in operation. The flushing tank, in addition to the usual reservoir chamber, which is supplied from the service
66 pipe by means of the float-valve in the ordinary way, is formed with a closed flushing chamber or service box, which may be referred to as a "vacuum chamber." An air pipe leads from the confined air space between the two traps upwardly over the tank and terminates at the top of this flushing or vacuum chamber, communicating freely therewith. When the closet is at rest this closed chamber is in communication through a valved aperture with the reservoir above, and consequently becomes filled with water. When the operating lever of the closet tank is pulled by means of the usual cord or chain attached to it this connecting valve is closed and a valve at the bottom of the flushing chamber is opened, whereupon the water contained in the flushing chamber flows out down the flushing pipe to the bowl. As it runs out from the flushing chamber it leaves a space therein above it which becomes filled with air drawn into it from the confined air space through the air pipe.

In this manner the air in the confined air space is rarefied or a partial vacuum is created. This rarefying action continues as long as the water continues to run out of the closed flushing chamber, during which time the bowl and upper trap my be siphoned several times by the continuance of the vacuum-producing action. When

all the water has run out of the flushing chamber the vacuum action ceases, after which the bowl is refilled by an "after-wash" or "after-flow" of water from the tank, which in the Peters & Donald construction comes from the float-valve, the main stream from which, when the float is lowered, is delivered in the reservoir of the tank while a smaller stream is conducted through a small pipe and discharged into the flushing pipe below the flushing valve at the outlet from the flushing chamber and flows down the flushing pipe into the bowl.

This after-flow does not take place in the Peters & Donald tank until after the operating lever is released, since, until that time, the water cannot flow out of the reservoir, and the float consequently cannot descend. Upon the release of the operating lever
67 the valve establishing communication between the reservoir and the flushing chamber is opened, and water flows from the reservoir into the flushing chamber, refilling the latter. During this operation the confined air therein escapes into the air pipe and thence through a check-valve which opens upwardly into a vent pipe, leading ordinarily to the roof of the building.

Peters & Donald's invention introduced thus a new type of closets of the general class of "siphon closets," but which, to distinguish them from ordinary siphon closets, are commonly known as "pneumatic closets," owing to the pneumatic action of the tank in establishing a partial vacuum for starting the siphonic outflow from the closet.

The next invention in the class of pneumatic closets is the one patented by James E. Boyle March 28th, 1882, patent No. 255,485, a copy of which I have here.

A copy of the patent referred to introduced in evidence and marked "Complainants' Exhibit 6."

It is stipulated by the parties that an office copy of the patent just offered in evidence and of all other copies that may be introduced by complainants of United States letters patent shall be treated with the same force and effect as if they were certified.

The invention disclosed in this patent operates on the same general principle as that of the Peters and Donald closet—that is to say, there are two traps in the soil passage, with a confined air space between them, communicating by an air pipe with a closed flushing chamber or vacuum chamber in the flushing tank overhead, and the production of the partial vacuum is due to the drawing of air into this vacuum chamber by the running out of water therefrom down the flushing pipe. Aside from mere unessential details of construction, the principal features introduced by this invention are two:

68 1st. The securing of the after-wash to refill the bowl by means of permanently overcoming the vacuum in the vacuum chamber, which is accomplished in the construction shown in the drawing of this patent by the entrance of air from the vent pipe lettered *f* through the tube lettered *g'*, when the lower end of this

tube is unsealed by the descent of the water level in the vacuum chamber.

2d. The invention introduced a new construction of bowl and soil passage, whereby the bowl and both traps were made in one piece of earthenware and so fitted together as to bring both traps above the floor instead of the lower trap being beneath the floor, as was the case in the Peters & Donald patent.

The next invention in this line of closets was the one patented by James E. Boyle, January 1st, 1884, known as patent No. 291,139, of which the reissued patent, "Complainants' Exhibit No. 2," is a reissue. I have here a copy of the original patent.

The copy produced by witness is offered in evidence and marked "Complainants' Exhibit No 7."

The state of the art prior to this patent, in so far as pneumatic closets are concerned, is to be found solely, as I believe, in the patents of Peters & Donald and Boyle's patent, No. 255,485, already referred to. In order to make clear the prior state of the art in other classes, in so far as it affects this reissued patent, it is necessary for me first to explain the nature of the invention.

In this patent there are the same two traps in the soil passage and confined air space between them which are characteristic of pneumatic closets, and the same air pipe extending upwardly from the air space into a pneumatic tank. This invention, however, differs from its predecessors in the construction and operation of the tank, by means of which the requisite partial vacuum is created. Instead of employing a vacuum chamber, the outflow of water from which, drawing air into it to fill the space previously occupied by the water, as in the previous patents—and which method of
69 creating the vacuum I may call the "vacuum-chamber principle"—this invention introduces a different method, namely, the exhausting of the air from the air pipe by the operation of an injector or ejector. The flushing water in flowing from the tank down to the bowl passes through a device which is essentially an injector, and which is in communication with the air-pipe. The descent of the water through this injector carries air along with it down the flushing pipe, thereby drawing the air from the air pipe and consequently creating the requisite rarefaction in the confined air space. The simplest construction shown in the reissued patent or its original is that shown in Fig. 6 thereof, wherein the air pipe *e* communicates through a branch pipe, *t*, with the injector I, through which the passage for the flushing water extends from the outlet *i* down the flushing pipe *l*. A flushing chamber or service box is shown which communicates with the open air through a vent pipe, *f*, so that it is not a vacuum chamber but a mere receptacle. Upon the opening of the flushing valve *h* this service box or receptacle is quickly filled from the reservoir E, and the water then runs out from it through the outlet *i* and down the flushing pipe *l* to the bowl, passing through the injector I and drawing air from the passages *t e*, and consequently from the confined air space. In this construction the outflow down the flushing pipe is less rapid than

the outflow from the reservoir E into the service box F, since the area of the opening *h'* is much greater than the area of the outlet *i*. Hence the service box or chamber F constitutes essentially an enlargement or pocket in the flushing pipe, as is the case ordinarily with service boxes as employed in the flushing tanks prior to the invention disclosed in this patent.

In the construction shown in Fig. 1 of this patent, No. 291,139, and the reissue, which construction is more clearly shown in the diagrams, Figs. 2 and 3, there is another element introduced, namely, a means for producing the requisite after wash to refill the bowl by the breaking of the vacuum on much the same principle as
70 in Boyle's earlier patent, No. 255,485. The air pipe *e* extends up within the service box F or more exactly within the upper continuation thereof and is enclosed within an air bell or tube having a closed top and open bottom. Another pipe, *r*, extends up within this air bell, communicating at its open top with the open top of the pipe *e* and communicating at its open bottom with the injector I through the passage *s*. When the flushing valve is lifted, as shown in Fig. 2, and the water level in the service box or chamber F rises high enough to seal the bottom end of the air bell *n*, the passage between the injector I and the top of the air pipe *e*, formed by the tube *r* and passage *s*, is brought into communication with the air pipe, so that in effect there is a single air passage from the confined air space between the two traps below, leading upwardly by the pipe *e* to the top of the air bell and then downwardly by the passage *t* to the injector. The outflow of water through the outlet *i* and injector I draws air through the passage *t e*, and also from the interior of the air bell, thereby causing the water level in the latter to rise higher than in the chamber F. This air-exhausting operation continues until, the flushing valve *h* having been closed, the water has so far run out from the chamber F as to unseal the bottom of the air bell, whereupon the air is admitted into the air bell and consequently into the air pipe and down to the confined air space *d* between the two traps, so that the vacuum in the latter is finally broken and the siphonic operation ceases, after which the water remaining in the chamber F flows out down the flushing pipe into the bowl and refills the latter to the normal level.

There occurs at the same time an operation which is not clearly indicated in the drawings of either the original or reissued patents. I refer to a double outflow from the chamber F down the flushing pipe, which occurs partly directly outward through the outlet opening *i*, as already described, and partly by an upflow of water within the air bell *n* and a downflow of water through the passage
71 *t* to the injector I. The interior of the air bell forms the short leg and the passage *t* the long leg of a siphon by which, in connection with the direct outflow through the outlet *i*, the water in the chamber F is carried down the flushing pipe. This siphonic action might not take place with the exact proportions shown in the drawing, since the fall of water from the level of the upper trap down to the level of the lower trap is less than the height of the

siphon, but with the relative proportions that occur in practice this siphonic action takes place. It will be understood that in this siphonic action the descending column of water through the passage *t* is mixed with air drawn from the pipe *e*. This siphonic outflow, however, is simply incidental to the construction and could not, in my opinion, occur with the precise proportions shown in the drawings as before stated.

I now come to the consideration of the state of the art as it existed prior to the invention disclosed in Boyle's patent, No. 291,139, in other branches than pneumatic closets. It was old and had been known for years to make water-closet flushing tanks with a reservoir, such as E in Fig. 1, supplied by a float-valve with a service box, into which water was admitted from the tank through a valve such as the one lettered *h*, operated by a lever such as that lettered *p* and with the flushing pipe leading from the outlet of the service box down to the bowl of the closet. The service box had also been opened to the outer air in an equivalent manner to the pipe lettered *f*. Tanks of this character had for years been very common for operating various kinds of water-closets. They were known generally in the trade as "service-box tanks," the object of the service box being to hold a supply of water approximately sufficient for a single flushing of the closet, so that on being quickly filled by the opening of the valve communicating with the reservoir it would discharge this contained water down the flushing pipe in a more gradual stream.

72 Tanks had also been made wherein there was no service box, the flushing pipe leading directly from the reservoir tank to the bowl.

Tanks had also been made of two kinds, holding either in the one case only enough water for a single flushing of the closet, being known as "single-charge tanks," and those holding water enough for two or more flushes, which are known as "reservoir tanks." The service-box tanks are of this latter class.

In reservoir tanks it had been a common practice to employ what are known as "water-waste preventing valves," which had been made of various constructions. Sometimes two valves were used in connection with the service box, somewhat as in Fig. 5 of this reissued patent, the one valve—corresponding to that lettered *h* in this figure—serving to fill the service box from the reservoir, and the other valve—corresponding to the one lettered *j* in this figure—serving to discharge the contents of the service box down the flushing pipe, and the two valves being operated through the medium of a lever or through intervening mechanical connections in such manner that the one was necessarily closed before the other commenced to open.

Waste-preventing valves had also been made of the class known as "slow-closing valves," wherein the valve after being lifted was constructed to remain open for a certain time, or until a certain quantity of water had passed out, whereupon it was closed automatically. The valve shown in Fig. 4 of the reissued patent is an example of the slow-closing valves, the valve in this instance being

lifted by the suction of a cupped leather piston or plunger, which in its ascent carries the valve up with it, after which the valve slowly descends by the leakage of water into the cylinder beneath the piston.

I believe that these statements cover about all that had been done in the line of water-closet tanks prior to this invention, so far as has any bearing upon this patent. Going outside of water closet or flushing tank devices, I need only call attention for an instant to what is so well known as to demand only a passing reference,
73 namely, to the fact that suction "injectors" or "ejectors" or "aspirators," as they have been variously called, had been well known long prior to this invention as means for giving motion to one fluid derived from the motion of another. They had been used for propelling a column of water by means of a moving column or jet of steam or other gaseous fluids. They had also been used for giving motion to air or other gaseous fluid by means of a flowing column of water.

Int. 8½. Please examine the claims of the Peters & Donald United States patent in connection with the Boyle reissued patent and state whether or not the water-closet shown and described in the Boyle reissued patent embraces elements set forth in the claims of the Peters & Donald patent, and state whether or not a water-closet constructed substantially in accordance with the Boyle reissued patent would include the elements set forth in the claims or any of the claims of the Peters & Donald United States patent, and whether or not such a water closet would conjointly embrace the features of the two patents.

By Mr. TAYLOR: Counsel for defendant objects to the question as leading and incompetent, in that it calls for a conclusion of law and an interpretation of the claims of the patent.

Ans. I find by examination of the Peters & Donald patent that its first claim defines as elements "a bowl, a fixed trap bend in the passage leading therefrom, whereby a portion of water is retained in the bowl; a second trap in the discharge passage leading from the first, whereby an air space is formed between the two traps, and an orifice communicating with said air space and adapted for the attachment of an air pipe." On examination of the Boyle reissued patent I find that the drawing thereof shows all of these elements, and in my opinion the description contained in said first claim clearly describes the construction shown in this reissue. These elements combined in this manner are, in my judgment,
74 essential to the construction of what I have described as the pneumatic class of siphon closets.

The second claim of the Peters & Donald patent specifies the same elements as the first claim, with the exception of the orifice communicating with the air space, and in addition thereto it specifies "means for rarefying the air in said space upon the flushing of the closet," these means necessarily involving such an orifice, which is hence included inferentially. On examining the Boyle reissue patent I find that it illus*lus*trates means for rarefying the air in the

air space between the two traps upon the flushing of the closet. The particular means differ somewhat in the two patents, that shown in the Peters & Donald patent being a vacuum chamber and that shown in the Boyle reissue being an injector, but the same general result, namely, the drawing of the air from the air pipe, and consequently rarefying the air in the confined air space, is produced by the operation of either of these means. It is consequently my opinion that the second claim of the Peters and Donald patent describes or defines a construction or combination which is employed in the closet illustrated in the Boyle reissue patent.

The third claim of the Peters & Donald patent includes as elements the bowl, the two traps, and the air space between them, with the flushing valve and "means for operating the same to flush the closet and means for drawing air from the space between the two traps, constructed to be set in operation by the act of opening the flushing valve." I find all these elements shown and described in the Boyle reissued patent. The tank therein shown has a flushing valve, means for operating it, consisting of the lever and pull, and means for drawing air from the air space, consisting of the injector, which is necessarily set in operation by the act of opening the flushing valve, since its operation commences when the flushing water commences to run through the injector.

Claims 4, 5, 6, and 7 of the Peters & Donald patent include as elements a flushing chamber and the air pipe leading from the air space between the traps and terminating within the flushing chamber at the top thereof, which construction I understand from the specification of this patent to mean a closed flushing chamber or vacuum chamber. If these claims are to be so construed they do not define combinations shown or described in the Boyle reissued patent; but if the flushing chamber is not to be construed as necessarily a closed or vacuum chamber, then I find that the combination described or defined in claim 4 includes elements which are shown and described in the reissued patent. Claim 5 is limited to an open air pipe communicating with the flushing chamber and containing a check-valve opening outwardly therefrom, elements which in the Boyle reissue I find shown only in Fig. 5 thereof. Claim 6 specifies, among other elements, two valves—the one opening from the reservoir tank to the flushing chamber, the other controlling the escape of water from said chamber to the flushing pipe—which elements I find shown in the Boyle reissue only, in Fig. 5 thereof. Claim 7 specifies an after-flow pipe leading from the float-valve to the flushing pipe, an element which is not to be found in the constructions shown in the drawings of the Boyle reissue.

I am, therefore, clearly of the opinion that a water-closet constructed according to any of the constructions shown in the Boyle reissued patent would necessarily involve the combination of elements specified in claims 1, 2, and 3 of the Peters and Donald patent, but as to claims 4, 5, and 6 of the Peters & Donald patent, this would depend on the construction to be given these claims [and as to the remaining claims of the Peters & Donald patent that would

depend on the construction to be given to those claims]* and upon the principles and combinations which might be embraced in the reissued patent.

76 On examining the claims of the Boyle reissued patent I find that claim 1 specifies a combination consisting of a bowl with a soil passage leading therefrom and two successive traps in said passage, a flushing pipe for conveying water to the bowl, a suction injector arranged in connection with said pipe and to be traversed by the flushing water, and an air pipe leading from the air space between the traps and communicating with said injector. On examining the several figures of the drawings I find all of them show this combination of elements—that is to say, in addition to the bowl and its two traps, all of them show a flushing pipe, an air pipe, and the injector, the latter being so arranged that the flushing water necessarily traverses it and being connected to the air pipe so that it will serve to draw air therefrom.

Claim 2 of the reissued patent specifies a combination consisting of the "reservoir tank, a flushing valve controlling the outlet thereof, a flushing pipe for conveying water therefrom to the closet, a suction injector arranged in connection with said pipe and to be traversed by the descending flushing water, and a suction pipe or air pipe in connection with said injector, whereby the water in flowing from said tank through the flushing pipe traverses the injector and sucks air from the suction or air pipe." I find that the construction of pneumatic tanks shown in each one of the figures of the drawing of the Boyle reissue includes the elements specified in this claim.

Claim 3 of the reissued patent specifies as elements "a reservoir tank, a flushing chamber" (meaning the service box or chamber F, as I have heretofore referred to it in my testimony), "a valve controlling the admission of water from said tank to said chamber, a suction pipe" (or air pipe) "communicating with the interior of said chamber, an injector" and flushing pipe, and "a suction passage affording communication from said injector to said suction pipe." This combination I find in the construction in Figs. 1 to 5, inclusive, of the drawing, but not in Fig. 6, in which latter figure the suction or air pipe does not enter the flushing chamber F.

77 By Mr. TAYLOR: Counsel for defendant objects to all of the testimony of this witness wherein he seeks to make the words "flushing chamber" synonymous with "service box," both in this answer and in the previous part of his testimony, because in the original patent it is nowhere mentioned as such, nor in the new specification until it comes to new matter injected into the specification for a particular purpose.

Claim 4 of the reissued patent specifies as elements a reservoir tank, a flushing valve and flushing pipe, a suction injector, a suction

* Witness says this matter enclosed in brackets should be omitted, as it is a repetition due to correction while giving answer and misunderstanding thereof by stenographer.
A. C. FRASER.

pipe and a trapped air passage communicating with the suction pipe and arranged to be unsealed and thereby to admit air to the suction pipe and break the vacuum therein before the cessation of the flow of flushing water. This I understand to refer to the air-bell device for securing the after-wash, shown in Figs. 1 to 5, inclusive, of the drawing, but not in Fig. 6.

Claim 5 of the reissued patent specifies as elements the tank E, the chamber F having inlet and outlet orifices, the valve *h*, the injector, the flushing pipe, the air pipe, the suction passage *t*, and the air bell *n*, a combination of elements which I find shown in Figs. 1 to 5, inclusive, but not in Fig. 6.

Claim 6 describes or specifies the combination of the reservoir tank, a flushing chamber having an inlet orifice of large area and an outlet orifice of contracted area in the proportion substantially as specified, a valve for closing the inlet orifice, an air pipe opening into said flushing chamber, and a flushing pipe leading from the outlet orifice. I find this combination shown in Figs. 1, 2, 3, and 4, but it is not shown in Fig. 6, and, as I understand the essential meaning of the claim, I do not believe it to be shown in Fig. 5.

In answer to the latter part of the question, as to whether a closet made according to the Boyle reissued patent would jointly embrace the features of the reissue and the Peters & Donald patent, I
78 would say that I find, from my examination of the claims and drawings of both patents, that a water-closet constructed, for example, as shown in Fig. 1 of the reissued patent would include or embrace the features or elements specified in the first, second, and third claims of the Peters & Donald patent and any of the claims of the Boyle reissued patent.

Hearing adjourned to February 23d, 1888, at 10 o'clock.

NEW YORK, *February* 23*d*, 1888.

Met, pursuant to adjournment, 10 a. m.
Present: Counsel as before.

Direct examination of ARTHUR C. FRASER continued:

Int. 9. State what, in your judgment, are the features of advantage, if any, which pneumatic siphon closets possess over other kinds of water-closets.

Ans. There are a great many different kinds or types of water-closets, over some of which the pneumatic siphon closets possess much greater advantage than over others. The closets which most nearly approach in advantage to pneumatic siphon closets are the closets of the class which I have referred to as simple siphon closets, which in their most improved form at the present time are known as "siphon jet closets." As compared with such closets, pneumatic siphon closets have the advantage that all of the flushing water flows through the bowl and serves to cleanse it instead of part of it being diverted and used merely for the purpose of accelerating the outflow. They also have the advantage of producing a stronger, more sustained, and swifter outflow, owing to the employment of the vacuum to draw

the water from the bowl. They also have the advantage, which, in my opinion, is a most important one, of successively drawing in air from the bowl, thereby sucking from it the foul gases and odors
79 generated in the use of the closet. In the ordinary siphon closets or siphon jet closets there is some slight drawing of air from the bowl when the final outflow or rush of water occurs, but with the pneumatic closets there is an almost continuous draught of air from the bowl into the soil passage from the first breaking of the vacuum until the final breaking of the vacuum towards the close of the flushing operation. The amount of this in-draught of air depends, of course, on the duration of the flushing operation, and in closets operated by a pull without any automatic mechanism for giving a measured flush this depends on the length of time that the pull is held. As compared with ordinary siphon closets, pneumatic closets have also the advantage that there is no flooding of the bowl above the normal water level necessary to start the siphon, which flooding is necessary with ordinary siphon closets unless a very large proportion of the flushing water is discharged directly into the siphon in order to start it, which, as before stated, is a disadvantage, since the water so used cannot be utilized to cleanse the bowl. The employment of two traps in the soil passage is also an advantage possessed by the pneumatic closets over other siphon closets, and also as compared with nearly all other types of so-called sanitary closets. This double trapping of the soil passage much more effectually prevents the entrance of sewer gas into the room in which the closet is situated than if only a single trap were used. In the constructions of pneumatic closets shown in the patent of Peters & Donald and the two patents of Boyle, to which I have referred, there is a provision for the escape from the space between the two traps of any foul gases that may pass first from the sewer pipe beyond the lower trap and into the space between the two traps, such gases escaping through the air pipe and finally by a vent pipe to the roof. Pneumatic closets have, as I believe, for a given quantity of flushing water used a stronger and more effective outflow, and afford a more thorough cleansing of the bowl and a more
80 complete elimination of odors and are, in short, more perfect in sanitary respects than any closets with which I am familiar.

Int. 10. Please state whether or not you are familiar with water-closets manufactured by the firm of Henry Huber & Co., of New York city; and, if so, whether or not pneumatic siphon closets are made by them.

Ans. Yes; I am generally familiar with all water-closets made by Henry Huber & Co., and I have examined pneumatic closets of their manufacture.

Int. 11. State what, in your judgment, are the advantages, if any, derived from the employment of the suction injector or ejector set forth in the Boyle reissue as the means for effecting the rarefaction of the air in the confined air space in the outlet passage from the bowl over the vacuum chamber for accomplishing the same end set forth in the Peters & Donald patent.

Ans. The employment of the suction injector enables a vacuum

chamber to be dispensed with, and consequently enables the mechanism to be considerably cheapened and simplified.

A vacuum chamber is open to the objection that unless made very strong and heavy it is liable to collapse under the atmospheric pressure to which it is subjected when the partial vacuum is formed within it by the running out of the water from it. A vacuum chamber is also liable to leakage, which necessarily impairs the vacuum and deranges the operation of the tank to a degree proportionate to the area of the leak.

A vacuum-chamber tank is also subject to the disadvantage that if in setting it be placed at too high a level, the vacuum action will be too sudden and not sufficiently prolonged to accomplish the best result. This is due to the greater suction occasioned by the water flowing through a longer flushing pipe than the normal—that is, a longer pipe than that for which the apparatus is proportioned—whereby the water is drawn out of the vacuum chamber too rapidly, the air being consequently drawn into it and out of the space between the traps too rapidly, so that before the proper flushing action can take place the vacuum will be broken by the admission
81 of air through the vent pipe, and consequently the siphonic action will not continue long enough and the after-wash will continue too long for the production of the best results. With an injector tank, however, the operation cannot be thus deranged or deranged to such an extent by setting the tank too high above the bowl, since the air suction is due, not to the rushing in of air into a space left entirely void by the flowing out of the water from it, but since the air is drawn in by the action of the descending column of water through the injector. Consequently the effect of setting an injector tank higher or lower is to enable the flushing to be accomplished with less water as it is set higher and requiring more water as it is set lower, within, of course, certain not very well defined limits, which must be ascertained in practice, according to the special proportions that are employed.

Furthermore, a vacuum chamber, in order to operate properly, requires a check valve to admit the escape of air from it while it is being filled with water, but which shall close and prevent the entrance of air to it during the flushing operation. Such check valves are liable to become deranged in their operation—to stick fast to their seats—and thereby in some cases to become inoperative and consequently to render the pneumatic tank to a greater or less extent inoperative or imperfect of operation. The introduction of the injector enables such a valve to be dispensed with, thereby, of course, overcoming the disadvantages inherent in the use of such a valve.

With the vacuum chamber an alternate action necessarily takes place, namely, the filling of the chamber with water and the subsequent discharge of the water from the chamber, which, in the case of a tank designed to give a number of successive flushes, or what I should call a "multi-charge" tank, necessitates the employment of a closed service box to form the vacuum chamber separate from the reservoir tank. The introduction of the injector in place of the vacuum chamber enables a service box to be dispensed with, so that

the flushing pipe might lead directly from the reservoir tank
82 instead of necessarily leading from an intervening service box, thereby enabling the construction of the tank to be simplified and cheapened. For a "single-charge" tank or one which is entirely emptied at each flush this advantage would be only partially realized, if at all, since the entire tank is in such case merely a service box.

There is another advantage incident to the substitution of an injector for the vacuum chamber, which is realized in connection with the system of securing the after-wash by breaking the vacuum finally shortly before the termination of the flushing operation, as is done in the two Boyle patents to which I have referred, namely, Nos. 255,485 and the reissued patent 10826. In the construction of vacuum tank shown in the former patent the vacuum chamber is provided with a tube projecting into it from the top and extending nearly to its bottom. Now, at the commencement of the flushing operation it is obvious that this tube is sealed to a much greater depth than at any subsequent time, since the water level descends constantly and finally passes below the bottom of the tube. As the water level descends and the tube is consequently sealed to continually less depth, the degree of vacuum that can be maintained in the vacuum chamber is continually decreasing. Consequently the capacity of the vacuum chamber for producing a high degree of vacuum is greatest at the commencement of the flush and becomes continually less, finally ceasing entirely. This, however, applies to the vacuum chamber only, since by its connection through the long air pipe with the confined air space below, the rarefaction in the vacuum chamber cannot reach its maximum until some little time after the beginning of the outflow, since at first it is relieved by the entrance of air from the air pipe and the confined air space beneath. The precise point in the flushing operation at which the maximum vacuum is produced depends, of course, upon the exact proportions employed, but from observation and trial of the closets
and tanks manufactured by Henry Huber & Co., wherein a
83 vacuum chamber and vent pipe are employed, I believe the maximum to occur in the early part of the flushing operation. Now, with the construction of the injector tank shown in Boyle's reissued patent there is no such diminution of the degree of vacuum produced as the flushing operation proceeds, since it has no vent pipe opening from the outer air for effecting the final breaking of the vacuum. The final breaking of the vacuum is accomplished, as I have before described, by means of the air bell, which itself acts as a siphon if the parts are properly proportioned, so that this air bell continues to draw water from the chamber as long as its lower end, forming the short leg of the siphon, remains in the water. Consequently up to this time the vacuum-producing agency operates with no diminution of energy, until finally when the air bell is unsealed the vacuum is suddenly and finally broken. To make this siphon action more clear I have made a drawing, which I here produce and which answers to Fig. 3 of the reissued patent, except that instead of showing an air bell I have shown an arrangement of pipes which

operates essentially the same, but shows more clearly the siphonic action. The air pipe *e* extends up into the flushing chamber F, and thence downwardly as the passage *t*, which extends down through the bottom of the tank and communicates with the injector I. The branch pipe *n* in this sketch, which is essentially the air bell lettered *n* in the patent drawing, opens at its lower end near the bottom of the chamber F and extends thence upwardly and joins the pipe or passage *t*. During the operation of the tank, if a sufficient vacuum is produced (as will be the case if the tank and the closet bowl with its two traps are properly proportioned to each other), water will be drawn up the pipe *n* and will pass down the passage *t* mixed with the air which is drawn from the air pipe *e*. The pipe *n* thus forms the short leg of a siphon and the passage *t* forms the long leg thereof.

Drawing produced by witness is offered in evidence and marked Complainants' Exhibit No. 8.

(Here follow diagrams marked pp. 84, 85, and 86.)

87 As long as any water remains above the bottom end of the pipe *n* this siphonic action continues, and as long as it continues the full degree of vacuum can be maintained.

In brief, the principal advantages of an injector tank as compared with a vacuum chamber tank are its greater simplicity, its less cost, less liability to get out of order, more sustained action during the flushing operation, and being less affected in its operation by the particular height above the closet bowl to which it may be set.

Int. 12. I here hand you a catalogue purporting to be issued by Henry Huber & Co.; please examine the same and state if you are familiar with the construction of the various closets shown and referred to in said catalogue; and, if so, describe briefly the several pneumatic closets therein shown, and state whether or not such closets embrace any of the features or elements shown and described in the Peters & Donald patents or in the Boyle reissued patent No. 10826.

Ans. Yes; I am familiar with the closets illustrated in this catalogue. The closets known by the trade names of "Tidal Wave No. 1," shown on pages 3, 4, 5, 6, & 7; "Tidal Wave No. 1 A," on page 8; "Geyser," on pages 9, 10; "Tempest," on page 10; "Cabinet," on page 11; "Cascade," on pages 12 and 13; "Trombe," on pages 12 and 18, and "Flume," on pages 14, 15, 16, and 17, are all pneumatic siphon closets and all embody in their construction the several features or elements specified or recited in claims 1, 2, and 3 of the Peters & Donald patent. The tanks of the "Tidal Wave" No. 1 A shown on page 8; "Geyser," on page 9; "Cascade," on page 13; "Flume," on pages 15, 16, and 17, and "Trombe," on page 18, are all of the injector class and embody in their construction the several features or elements recited in the claims of the Boyle reissued patent. Their construction is almost identical with that shown in Fig. 1 of said reissue.

No. 143.
Huber et al.
v.
N.O. Nilson
M'f'g. Co.
} p. 84.

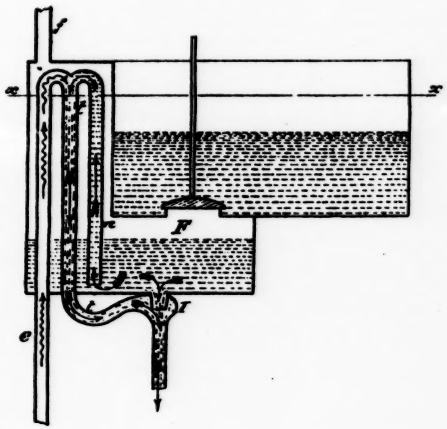

COMPLAINANTS' EXHIBIT No. 8.

Fraser's Drawing illustrating
Syphon Action of Trombe Tank.

COMPLAINANTS' EXHIBIT No. 5.

Fraser's Drawing of Peters & Donald Closet.

No. 143.
Hubbell.
vs.
N.O. Nelson
Mfg. Co.
} p. 85

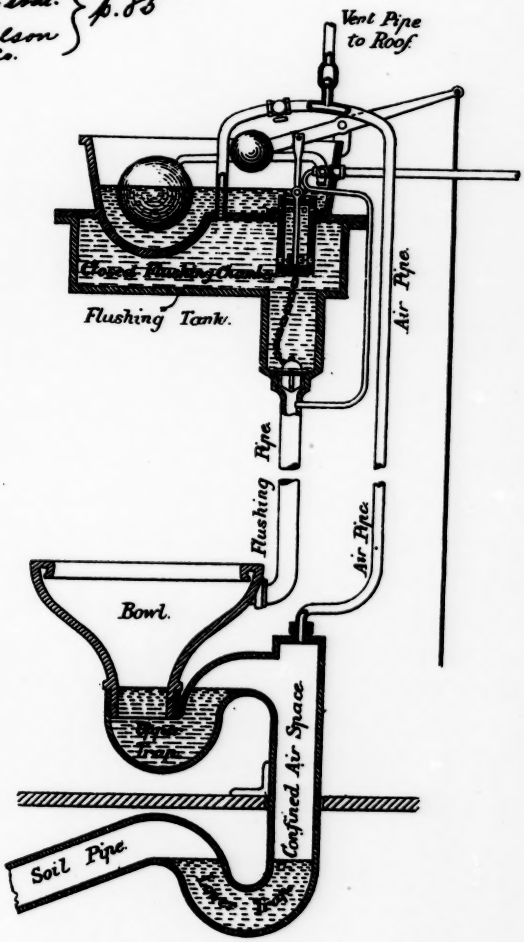

PETERS & DONALD CLOSET.

At Rest.

No. 143
Huberetal
& Nelson
Mfg Co
p. 86.

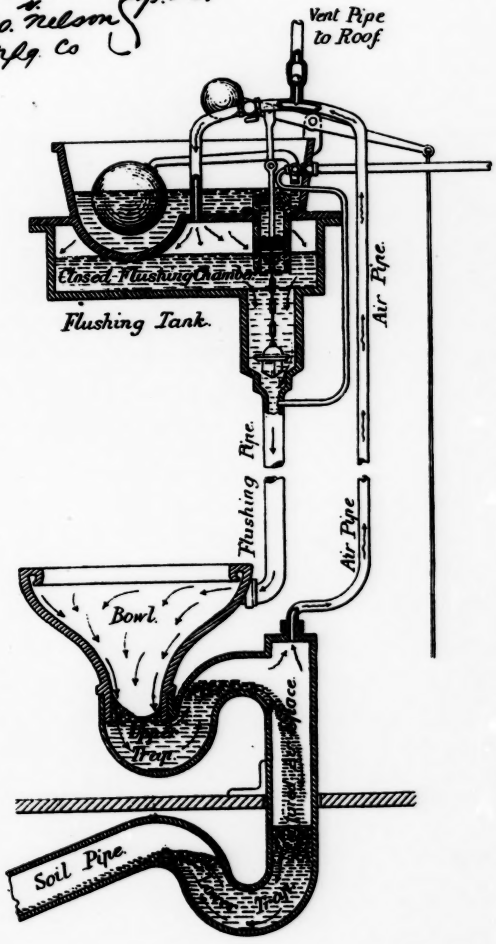

PETERS & DONALD CLOSET.

In Operation.

I may add that the construction of bowl and two traps, both above the floor in one piece of earthenware, in the "Tidal Wave
88 No. 1" and the "Geyser" and "Tempest" closets is according to features or elements expressed in the claims of Boyle's patent No. 255,485 here in evidence, and that the tanks of the "Tidal Wave No. 1" closets, shown on pages 4, 5, and 7, are vacuum chamber tanks and constructed in general according to Boyle's said patent No. 255,485, although in detail their construction differs somewhat from that shown in the drawing of that patent.

By consent of defendant's counsel the first eighteen pages of said catalogue referred to by witness are severed from the remainder of the said catalogue and attached together and offered in evidence by complainants' counsel, marked "Complainants' Exhibit No. 9," and it is admitted by defendant's counsel that these pages form part of the catalogue of Henry Huber & Co. issued in 1887.

Int. 17. Please examine the tank and bowl here shown you, which are marked respectively "Complainants' Exhibit Defendant's Tank" and "Complainants' Exhibit Defendant's Bowl," and state whether or not you understand from your examination the construction of the same; and, if so, describe the construction and state what, in your opinion, is the method of operation of the same.

Ans. I have examined this tank, marked "Complainants' Exhibit Defendant's Tank," and I find that it is constructed with an outlet adapted to be attached to the flushing pipe and having an injector within it with a side branch adapted for the attachment of an air pipe, which upon being so attached would be brought into communication with the injectors. The outlet or flushing valve is of the self-seating or slow-closing type of valve and of the particular species of slow-closing valve which employs a float, which, when lifted, gradually fills with water, thereby losing its buoyancy and enabling the valve to slowly settle to its seat. There is an operating lever adapted for the attachment of a chain or cord for pulling
89 it, counterweighted on the arm opposite to that of which the pull-chain is to be connected, and the coun-weighted arm is connected to the valve, so that when the lever is tilted by pulling the pull-chain the valve is lifted slightly from its seat. Normally, and before the operating lever is pulled, the valve is held to its seat by the pressure of the superincumbent column of water upon the area of the valve seat (less the area of the overflow pipe which passes down through the float). The pressure of this column of water holds the float down and prevents the valve being raised by the buoyancy of the float until the pulling of the lever lifts the valve slightly from its seat, whereupon this pressure is relieved by the flow of water beneath the float, and the float by its buoyancy is enabled to lift the valve. The float and valve then rise suddenly to the limit of their upward movement and permit the water contained in the tank to flow out through the outlet opening and down through the injector to the flushing pipe and then (when the connections are properly made) to the flushing rim of the bowl. While this flow continues water enters the open bottom of the float, being

permitted thus to enter by the leakage or slow escape of air from the float, so that it gradually loses its buoyancy until finally it ceases to uphold the weight of the valve and its attached parts, whereupon the valve closes upon its seat and the outflow of flushing water ceases. The escape of air from the float takes place through a small tube, which extends from the top of the float into which its lower end opens up along the side of the overflow tube to a height somewhat above the water level in the tank, where it curves over and extends thence downwardly along the other side of the overflow tube, and its other end—which normally is sealed or immersed in the water of the tank—is provided with a screw for adjusting the area of its opening. When the tank is at rest water cannot enter the float through this small tube, owing to its being carried above the water level, but during the operation of the tank the air can escape from the float, passing out through this tube and bubbling out therefrom into the water of the tank, the rapidity of its escape, and, consequently, the time during which the float shall uphold the valve, being determined by an adjustment of the screw at the end of this tube. After the operation of the tank it is refilled as usual through a float-valve, or ball cock as it is sometimes called, which operates to all appearance in the ordinary manner of such valves.

90

The injector to which I have referred is constructed in the manner which I will now describe. The outlet passage leading downward from the valve seat of the flushing valve extends downward cylindrically for a short distance, about four inches, and is contracted at its lower end, where it terminates in the usual screw-threaded union or coupling for the attachment of the flushing pipe. A branch passage is found entering this chamber from one side and at a point about half way down extending into it to the centre, and then extending downward within it a short distance. Beneath this downward branch is applied the neck of a flared or trumpet-shaped tube, which is secured in place by a screw projecting upwardly from it and screwed into and through the closed top of the downward branch. In this manner a passage is formed extending from one side of the outlet chamber to its middle and then downwardly and extending laterally and communicating with the contracted portion of the outlet chamber, just above its connection with the flushing pipe. Between the edge of the trumpet-shaped piece and the contracted bottom or neck of the outlet chamber there is an annular space for the passage of water from the outlet chamber above this trumpet-shaped piece down to the flushing pipe, and this annular space may be adjusted to greater or less area by screwing the trumpet-shaped piece up or down. I observe that the upper end of the attaching or adjusting screw is nicked so it can be turned by a screw-driver, and I apprehend that in fitting the tank together the trumpet is thus adjusted up or down until the position is reached which affords the best practical result.

91

In the operation of the tank the flushing water will descend into and probably will fill or nearly so the outlet chamber above the trumpet and will rush out through the annular space

around the trumpet and flow thence down the flushing pipe, and in so doing it will carry air along with it, which will draw from the interior of the trumpet and from the lateral passage extending within the chamber and communicating with the trumpet piece, and consequently will draw air from the air pipe which is attached to this lateral passage.

The flushing valve and its attached float and overflow tube are guided in their upward and downward movement by means of a rod projecting vertically upward from the centre of the valve seat and through the centre of the overflow tube, which is provided with guiding pins near its top and with a guiding hole or socket near its bottom, loosely embracing the rod, and on the top of the rod is screwed a nut which serves as a stop to limit the lift of the valve.

On examining "Complainants' Exhibit Defendant's Bowl" I find that it is constructed with the usual flushing rim and the ordinary construction of flushing attachment adapted for the attachment of the flushing pipe so that water descending the flushing pipe can flow through said attachment into the flushing rim and run out through the usual slots in the side of the flushing rim and down the sides of the bowl. The bowl is formed with a bottom outlet and with an outlet passage extending thence upwardly close along the exterior of the bowl and nearly to the top thereof where it bends over laterally and descends also close along the exterior of the bowl and terminates beneath the bottom of the bowl and apparently in a line with the vertical central axis thereof.

If the bowl were filled with water the water would pass into this outlet passage any fill the same and the bowl up to the level of the bend at the crown of the outlet passage and where the up leg thereof turns over and joins the down leg. At this crown there is formed an opening or orifice constructed with the usual horn or neck or connection adapted for the connection therewith of a pipe,
92 smaller, however, than the pipe for which the flushing connection is adapted. If an air pipe were joined to this connection its interior would have free communication with the space in the down leg of the outlet passage.

In setting up such a closet as one of which these exhibits are parts the bowl must be set in connection with a trap in the soil passage leading from it, in order to form a confined air space between this trap and the trap constituted by the upward bend of the soil passage formed in one piece with the earthenware bowl. If such a trap is not provided in connection with the closet the injector in the tank and the air connection therewith and the connection with the crown of the moulded earthenware trap cannot be utilized. As ordinarily set and as in my opinion this closet, "Exhibit Defendant's Bowl," would be set, such lower trap is arranged beneath the floor and close to the connection at the floor with the outlet from the earthenware bowl and trap at the flanged neck thereof.

The bowl having been set in connection with such a trap and the tank erected overhead at a suitable or the conventional height, a flushing pipe will be connected with its upper end joined by a union in the ordinary manner to the bottom of the outlet or injector cham-

ber of the tank and with its lower end coupled with the flushing rim connection of the bowl. An air pipe, which would ordinarily be of smaller area than the flushing pipe, will be connected at its upper end to the lateral branch leading into the injector chamber and at its lower end in connection with the crown of the earthenware trap communicating with the down leg thereof.

To illustrate these connections as they would be made in the practical setting of the closet I have had a drawing made, which I here produce. * In this drawing Fig. 1 is a front elevation of the closet, the tank being shown in section in order to render the working parts visible and the floor also being sectional. Fig. 2 is a transverse or fore-and-aft vertical section cut vertically through
94 the tank in the plane of the axis of the outlet valve and cut through the bowl and traps as nearly as possible to the axis of the water passage.

Fig. 2 shows the bowl and trap most clearly. A is the bowl; *a* is the flushing rim; *b* is the outlet from it; B, the upper trap in the passage leading from the latter; *c*, the crown of the trap, of which *d* is the up leg and *e* the down leg. C is the lower trap beneath the floor, and D the soil pipe or passage beneath the lower trap. E is the confined air space between the two traps. *f* is the connection at the crown *c*, by which the air pipe F is connected to the air space, and *g* is the flushing rim connection by which the flushing pipe G is connected to the bowl.

In the tank above, I designates the outlet or flushing valve; J its float; K the overflow pipe; L the operating lever; *l* the chain or other device by which it is pulled; *h* a small bent tube through which air escapes from the float J. *i* is the valve seat for the outlet valve I, and H the outlet chamber or injector chamber leading thence downwardly, and to which the upper end of the flushing pipe G is coupled by the union *j*. The letter M designates the injector as a whole, which is constituted by the chamber H with its contracted base, the trumpet-mouthed tube *k*, the lateral and downward passage *m*, and the fastening for the trumpet, consisting of the screw *n* screwing through the roof of the passage *m*. The upper end of the air pipe F is joined by a union, *p*, to the lateral branch of the passage *m*. Q is the float-valve by which the tank is refilled from the service pipe. Fig. 3 of this drawing is a view showing the construction of the injector and valve more in detail, being a vertical, fragmentary section on a larger scale.

The drawing produced by witness is offered in evidence, marked "Complainants' Exhibit No. 10."

(Here follows diagram marked p. 93.)

The closet having been set up as I have explained and as this drawing shows, its operation is as I will now describe. On pulling

* See Complainants' Exhibit No. 10.

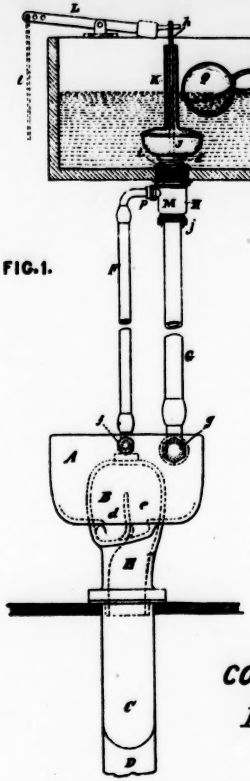

FIG. 1.

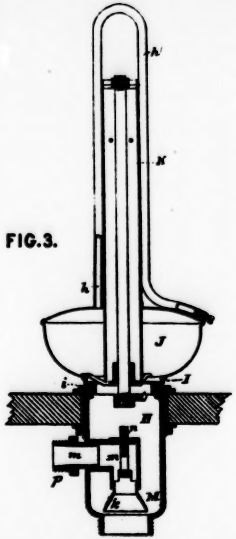

FIG. 3.

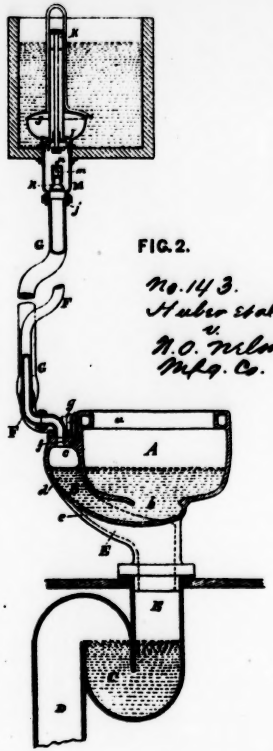

FIG. 2.

No. 143.
Huber et al.
v.
N.O. Nelson
Mfg. Co.
} p. 93

COMPLAINANTS' EXHIBIT Nº 10.

Fraser's Drawing of Defendant's "Syphonia" Closet.

the lever to lift the flushing valve from its seat the valve will
95 rise and open fully, whereupon the water will run out from the tank through the injector and down the flushing pipe to the bowl. In falling through the injector it will draw air along with it, and thereby create a partial vacuum in the air pipe F and in the air space E, between the traps B and C. This partial vacuum will start the siphonic outflow from the bowl, so that the water will be drawn out therefrom and air drawn through the outlet passage and into the air space to break the vacuum; and meanwhile the entrance of the flushing water to the bowl will maintain a wash therein and outflow therethrough and through the outlet passage and traps to the sewer pipe. The valve I will gradually reseat itself by the filling of the float J with water, and consequently the latter portion of the flush will be of less volume than the first portion, owing to the contraction of the outlet opening upon the approach of the valve to its seat. This diminution of the fall of flushing water will result in weakening correspondingly the suction of the injector, and finally, toward the close of the flushing operation, the action of the injector will become so weak that the consequent suction will cease practically to draw or siphon the water from the bowl, so that the last operation of flushing water descending the flushing pipe will serve to refill the bowl, thus constituting what is termed an after-wash. This is the portion of defendant's closet as I understand it and as I believe it will be in practice, although I should add that I have not seen it in actual operation.

It is admitted by counsel for defendant that the "Complainants' Exhibit Defendant's Tank" and "Complainants' Exhibit Defendant's Bowl," shown to witness and referred to in his last answer, are the identical ones referred to in the stipulation dated at St. Louis on or about the 17th day of February, 1888, and said exhibits are here introduced in evidence by complainants' counsel, marked as already indicated.

96 Int. 14. Please examine pages 6 and 7 taken from a catalogue purporting to show water-closets manufactured by the N. O. Nelson Manufacturing Company of St. Louis and state from your examination of the same what you understand to be the operation of the closet there shown and referred to, comparing the same with Complainants' Exhibits Defendant's Tank and Bowl, which you have already testified in reference to.

Defendant's counsel admit that said pages 6 and 7 referred to in the above question and hereto annexed, marked "Complainants' Exhibit 11," are taken from a pamphlet purporting to be a catalogue of the N. O. Nelson Manufacturing Company, as appears by the title-page, which is also attached with said pages as part of this exhibit.

Ans. I find on these pages an engraving and a description which to all appearances and in my opinion correctly illustrate and describe a water-closet identical in all substantial respects with Complainants' Exhibits Defendant's Tank aad Bowl. The illustration

on page 6 shows a closet which is obviously a pneumatic closet, since two pipes are shown connecting the tank with the bowl, the larger one being the flushing pipe and the smaller one being the air pipe. In the description on the opposite page, 7, I find it stated that a ¾-inch pipe is to be used as the air or siphon pipe and a 1¼-inch pipe for the main supply pipe, by which I understand the flushing pipe; and I also find the directions "Always use a trap below the floor and be sure the joint between the trap and closet is air-tight." The operation of the closet here illustrated and described would be, in my opinion, the same as that described in my last answer.*

97 Int. 15. Please compare said Exhibits Defendant's Bowl and Tank with the Peters & Donald patent No. 260,232 and the Boyle reissue No. 10826, referring particularly to the constructions, features, and elements specified in the several claims thereof, and state whether or not, in your opinion, the said tank and bowl include or involve in their construction and method of operation the features and elements specified in said claims or any of them and give your reasons in support of your opinion.

Ans. I find from a comparison of the said Exhibits Defendant's Tank and Bowl with the Peters & Donald patent that with the exception of the second or lower trap (the one lettered C in my drawing, Exhibit No. 10), which does not appear in said exhibits, but which must be united with them to render them operative as a pneumatic closet, they are described or defined by claims 1, 2, and 3 of the Peters & Donald patent.

Claim 1 thereof specifies "a bowl" and "fixed trap bend in the passage leading therefrom whereby a portion of water is retained in the bowl," which features I find in Exhibit Defendant's Bowl; "a second trap in the discharge passage leading from the first," which feature, as I have just stated, must be added to defendant's bowl to make it operative as a pneumatic closet, "whereby an air space is formed between the two traps," and "an orifice communicating with said air space and adapted for the attachment of an air pipe." This orifice I find in Exhibit Defendant's Bowl, it being the one communicating with the crown of the trap and designated by the letter *f* in my drawing Exhibit 10.

Claim 2 specifies a "water-closet consisting of a bowl, a fixed trap bend in the soil passage leading therefrom whereby a portion of water is retained in the bowl," which feature I find in Exhibit Defendant's Bowl; "a second trap in said soil passage below the first," which trap, as already stated, must be added to defendant's bowl to render it operative as a pneumatic closet, so that in

98 the language of the claim "an air space is formed between the two traps," and the claim further specifies "means for

---

*ST. LOUIS, *June* 7, 1888.

Defendant's examination interrupted for the purpose of making the following admission:

Defendant admits "Complainants' Exhibit 11," containing the cover and pages 5, 6, 7, and 8 of a catalogue, is in fact the cover and the said pages of a catalogue published and circulated by defendant prior to the filing of the bill in this suit.

rarefying the air in said space upon the flushing of the closet," which means I find in the injector forming part of Exhibit Defendant's Tank. To render this means for rarefying the air operative it must of course be connected by a pipe with the air space between the traps in a manner substantially as shown in my drawing, Exhibit 10.

Claim 3 specifies "a water-closet, consisting of a bowl and trap leading therefrom," both of which elements I find in defendant's bowl; "a second trap in the discharge passage leading from the first," which trap, as before stated, must be added to make the closet operative as a pneumatic closet in order to form "an air space between the two traps," as specified by the claim; and it further specifies "a flushing valve and means for operating the same to flush the closet," both of which elements I find in Exhibit Defendant's Tank, the flushing valve being the valve I and the means for operating it being the lever L in my said drawing; and it further specifies "means for drawing air from the space between the two traps constructed to be set in operation by the act of opening said flushing valve." This element I find in Exhibit Defendant's Tank, the injector therein being (when connected by an air pipe, as shown in my said drawing and as it must be connected to render the closet operative as a pneumatic closet) a means for drawing air from the space between the two traps, and also being constructed to be set in operation by the opening of the flushing valve, since the opening of the flushing valve admits the stream of water to flow through the injector, which stream of water starts the action of the injector.

Turning now to the Boyle reissued patent No. 10826, I find, on comparing with it defendant's tank and bowl, that a pneumatic closet of the construction embodied in these exhibits is accurately described in and includes the features or elements specified in claims 1 and 2 thereof.

Claim 1 specifies "a water-closet, consisting of a bowl, with the soil passage leading therefrom and two successive traps in said
99 passage," which features, with the exception of two successive traps, I find in Exhibit Defendant's Bowl, and which, if a second trap were added, as shown in my drawing, Exhibit 10, and as must be done to render the closet an operative pneumatic closet, would have two successive traps in the soil passage and come literally within the language just quoted. The claim further specifies that these features are "in combination with a flushing pipe for conveying water to the bowl, a suction injector arranged in connection with said pipe and to be traversed by the flushing water, and an air pipe leading from the air space between said traps and communicating with said injector, substantially as set forth, whereby the flow of water through said injector serves to draw air from said air space." I find in Exhibit Defendant's Tank a suction injector so arranged that in the operation of the tank it is necessarily traversed by the flushing water and provided with connections or unions by which it is adapted to be joined to the flushing pipe and to the air pipe in the manner shown in the drawing, Exhibit 10, so that when thus connected, as it must be to constitute an operative

pneumatic closet, the flow of flushing water through the injector serves to draw air from the air space between the two traps in essentially the same manner specified in this claim.

Claim 2 of this reissued patent does not specify as elements the bowl or outlet passage or its traps or confined air space. It specifies "a flushing apparatus for water-closets, consisting of a combination of a reservoir tank and flushing valve controlling the outlet thereof," which elements I find in Exhibit Defendant's Tank; also "a flushing pipe for conveying water therefrom (that is, from the flushing valve) to the bowl of the closet, a suction injector arranged in connection with said pipe, and to be traversed by the descending flushing water," which suction injector I find in Exhibit Defendant's Tank, provided with means for connecting a flushing pipe to it, in the manner shown in my drawing, Exhibit 10; and said claim also specifies "a suction pipe in connection with said injector," provision for applying which pipe I find in
100 connection with the injector in Exhibit Defendant's Tank, so that when an air pipe is thus connected in the manner shown in my drawing, Exhibit 10, the operation of the injector will be (to use the language of the claim) that "the water, in falling from said tank downward through the flushing pipe, traverses said injector and sucks the air from said suction pipe."

I should observe that in my testimony thus far I have referred to the flushing pipe as though it was merely the pipe which in defendant's closet is adapted to be attached beneath the outlet chamber H, whereas essentially this chamber, H, forms a part of the flushing pipe, since in essential respects the flushing pipe consists of the entire passage leading from the outlet valve of the tank down to and communicating with the flushing rim of the bowl. Indeed, the flushing rim forms also in this sense a part of the flushing pipe, since it is a continuation of this passage, although ordinarily it would not be so considered, since in its common acceptation, as used by plumbers, the term "flushing pipe" is applied only to the lead or other pipe by which the tank and the bowl are connected together.

Int. 16. Please state what, in your opinion, are the relative efficiency, merits, and practicability of water-closets made in accordance with the Exhibits Defendant's Tank and Bowl as compared with the pneumatic siphon closets made by Henry Huber & Co., concerning which you have already testified.

By Mr. TAYLOR: Question objected to as irrelevant, incompetent, and immaterial. The witness confesses he never saw a water-closet such as shown in Defendant's Exhibit Tank and Closet in Operation. Moreover, it is unimportant in this case whether it works better or worse than the closets with which it is brought in comparison.

Ans. In making a comparison between the Huber closets and the defendant's closet I can, of course, only testify as to what should be the relative merits and demerits attributable to their con-
101 struction as mechanisms based upon my general knowledge

of such devices, but I cannot testify as to their relative merits and demerits from any personal knowledge derived from actual trials of the respective closets, since, as already stated, I have not made a practical test of the defendant's closet.

In comparing defendant's closet with those made by Henry Huber & Co. it seems to me proper to select from among the various styles made by the latter firm the one which most nearly resembles defendant's closet, and I therefore select for this comparison what is known as the "Cascade" closet, made by Henry Huber & Co., and which is shown on pages 12 and 13 of the catalogue, Complainants' Exhibit 9. The bowl and principal trap of this closet are moulded in one piece of earthenware, the arrangement of the up-and-down legs of the trap being both against the bowl, very much as in Exhibit Defendant's Bowl. The tank of this closet is constructed essentially as shown in Fig. 1 of the Boyle reissued patent. In the setting of the closet it is set in connection with a second trap beneath the floor in substantially the same way as defendant's closet is necessarily set, as shown in my drawing, Exhibit 10. Thus the bowl and traps of the two closets are very nearly alike, the only difference that I find between them being in the details of the style of earthenware connections for joining the flushing and air pipes to the earthenware bowl and trap and in the shape and proportions of the outlet passage, which differ in some minute and non-essential respects in the two structures. Both closets are, as I believe, designed to be operated by a pull—that is, by a manual manipulation—that is, manipulation of the hand—in contradistinction to an automatic manipulation through the medium of the water-closet seat. The general operation of the two tanks is essentially the same, since both produce the pneumatic action or suction by means of an injector in connection with the flushing pipe. In the Cascade closet, however, the air pipe connects with the injector in a different manner from defendant's closet, since in the former it extends
102 up into the tank to above the water level therein and then communicates with the injector by a passage extending downwardly to the bottom of the tank, whereas in defendant's closet the air pipe does not extend into the tank, but communicates directly with the injector. This upward extension of the air pipe above the water level in the Cascade closet affords, in my opinion, two advantages which are not found in defendant's closet. First, it prevents the suction in the air pipe from drawing some of the flushing water into the air pipe during the flushing operation, thereby not only wasting the water, but also deranging the vacuum action. I am not prepared to state positively that any such back draught of water into the air pipe would practically occur in the operation of defendant's closet, but owing to the high point to which the pipe is carried in the Cascade closet it would be far less likely to occur in that than in defendant's closet. Second, this construction in the Cascade tank enables the vacuum to be finally and positively broken before all of the flushing water has run out of the flushing chamber, so that the remaining flushing water will serve to certainly refill the bowl without liability of its being siphoned out as it enters and

thereby leaving the bowl empty or only partially filled and the upper trap insufficiently sealed. In my opinion the provisions in defendant's tank for securing an after-wash are greatly inferior to those provisions in the Cascade tank. The after-wash in defendant's tank, being due to the diminution of the stream of flushing water passing through the injector, is unaccompanied by any absolute breaking of the vacuum in the air pipe—that is to say, by any opening or communication between the air pipe and the external atmosphere—and consequently as long as any flushing water continues to flow through the injector so long will there be some degree of rarefaction in the air pipe caused by the action of the injector. This rarefaction will decrease as the fall of flushing water decreases, but will not altogether cease until the flow of flushing water ceases.

Hence, in order to fully refill the bowl in defendant's
103 closet, it is necessary for the latter portion of the stream of flushing water to be reduced to a mere drizzle, so that it shall produce no rarefaction sufficient to siphon the water from the bowl into the confined air space and down to the lower trap. In defendant's closet the restoring of atmospheric pressure in the air space between the two traps must be accomplished, if at all, by air drawn in from the bowl during the flushing, and if the final inflow of air is insufficient to fully restore this pressure it cannot be fully restored until after the flushing operation ceases, and consequently the bowl cannot be filled entirely full, since after the atmospheric pressure is restored, which occurs by the admission of air from the flushing rim and up the flushing pipe into the air pipe, the water, which up to that time has been held at a higher level in the ascending limb of the trap than in the bowl, will drop back to a uniform level with the water in the bowl, the difference in levels depending, of course, on the extent of rarefaction within the air space. In my judgment, in order to refill the bowl of defendant's closet fully or approximately so it is necessary to so adjust the self-closing flushing valve that towards the close of the flushing operation it shall deliver a very much reduced stream of flushing water, so that the bowl consequently is refilled slowly, and a considerable time must elapse before it is so fully refilled as to put the closet in condition for being flushed a second time. In my judgment, from a comparison of the mechanism of defendant's closet and the Cascade closet, the bowl of the latter would be refilled in much quicker time than the bowl of defendant's closet. In my judgment a very nice adjustment of the self-closing valve in defendant's closet must be made in order to insure a proper after-wash for refilling the bowl, and if in use this nice adjustment should become deranged the operation of the closet would be materially affected, since, if the flow were in too great volume towards the end of the flush, the suction created by the injector would be maintained and consequently the water would be siphoned out of the bowl as fast (or nearly so) as it entered, thereby leav-
104 ing the bowl only partly filled. Such a derangement of the valve might occur through a closing or stopping up of the minute passage at the end of the small lipped air tube through which the air escapes from the float. It might also occur through some

imperfection of the vertical rod which guides the valve in its lifting or by some obstruction getting beneath the valve. In short, the after wash provided by the construction of the Cascade tank is, in my opinion, a certain, effective, and trustworthy one, which is not liable to derangement in use, and which quickly refills the bowl, while in the construction found in defendant's closet the after wash would be uncertain in its operation, liable to derangement in use, and tardy in the refilling of the bowl.

I find also a difference between the Cascade closet and defendant's closet in respect to the venting of the air space between the traps by means of which any effluvia or foul gases which may exist in this space may escape. In the Cascade closet this confined space is vented through the air pipe and through the air bell *n* (see the drawing of the reissued patent) and through the upper extension F′ to the vent pipe *f*, which in the connecting of the closet is led to the roof or to a flue. Since in the use of closets of this class it sometimes occurs that excreta will be left in the second or lower trap, and since also at times sewer gas may penetrate through the lower trap into the confined air space, it is highly desirable from a sanitary point of view that any unwholesome effluvia or foul gases which may be contained in the confined air space shall have free escape outside of the building or apartment in which the closet is set, and this is provided for in the Cascade tank through the vent passages just referred to. In Exhibit Defendant's Tank I find no means for conducting such foul gases away from the apartment, but, on the contrary, I find that the air space is vented through the air pipe and through the overflow pipe, lettered K in my drawing, Exhibit 10, which overflow pipe opens at its upper end to the external atmosphere over the tank, and consequently within the apartment where the closet is set, so that whatever foul gases are in the air space are free to find their way out into the apartment. In the Cascade tank any such escape of the gases into the apartment through the overflow pipe is prevented by the trapping or sealing of the overflow pipe in the manner shown in Fig. 1 of the reissued patent, where the lower end of this pipe is immersed in water held in the cup M′.

I find another difference between the Cascade tank and defendant's tank, namely, in the way of operating it. In operating the Cascade tank it is necessary to hold the pull for a certain time in order to admit enough water from the reservoir into the service or flushing chamber to fill the latter, or nearly so, which operation requires some slight degree of experience in the use of the closet, although it seems to me that in practice it would rarely occur that a person should hold the pull too short a time, since the most natural thing is to hold it until one hears the water entering the bowl. Defendant's tank, on the contrary, is so constructed that an instantaneous pull or jerk will suffice to open the valve, and the closing of the valve is entirely automatic and beyond control of the operator, so that so long as the closet remains in operative condition its correct operation, even by inexperienced persons, is assured. This difference, however, is attended by the compensating advantage on the

part of the Cascade tank that one who is experienced in its use (as most people who are apt to use it are) can secure a longer or shorter flush as circumstances may require. For example, for using the closet as a urinal he can give a very brief pull to the lever, which will be sufficient to flush the closet, and in the ordinary use of the closet, when solid excreta are required to be carried out, and consequently a more forcible flush is required, he can hold the pull for a longer time, thereby prolonging the flush to any extent that his judgment may dictate.

By Mr. TAYLOR: Counsel for defendant here gives notice that he will move to have all the testimony given under the last
106 question expunged from the record as irrelevant and immaterial to the issue or issues as to whether the patents are valid, or either of them, and whether the defendant infringes said patents, they being the only issues properly presented now on the hearing for an injunction before the court.

Hearing adjourned to February 24th, 1888, at 10.30 a. m.

BEN. L. FAIRCHILD,
Special Examiner.

FRIDAY, *February* 24, 1888.

Appearances: Same as before.

Deposition of ARTHUR C. FRASER continued:

Ans. (continued). Witness asked to have his last answer read and then said: I should add to that answer, in order to make it complete, that I also find a difference between the Cascade closet and defendant's closet in respect of the venting of the bowl through its flushing rim. In the Cascade closet when the vent pipe *f*, in the reissued patent, is properly connected to flue or to the roof of the building, there will be normally an updraft through it, and in the construction shown in the reissued patent the flushing pipe is in free communication with this vent pipe, so that a current of air will be drawn from the bowl into the flushing rim and thus up through the flushing pipe, through the outlet passage *i*, into the chamber or service box F, and up around the air bell *n*, and within the upward extension F′ to the vent pipe *f*. This action is advantageous in drawing foul odors out of the apartment in which the closet is placed, and also, during the use of the closet and before the flushing operation commences, in drawing out of the bowl any foul odors that may there exist, thereby rendering the closet as slightly odor-
ous in use as can be and contributing to its sanitary advan-
107 tage. In defendant,s closet, there being no such vent pipe, there is no means for carrying such draft of air from the bowl, and consequently the odors will not be thus drawn out from the bowl, or, if they should find their way up the flushing pipe and through the overflow pipe, they would emerge into the apartment above the tank.

Another difference that I find is in the capacities of the tanks of these two closets for yielding several successive flushes. The tank

of the Cascade closet has a reservoir in addition to the flushing chamber or service box, which holds water enough to fill the service box and consequently to flush the closet several times in succession, so that, in case the tank refills slowly, the closet may be used several times in quick succession without thereby rendering it inoperative and without leaving the bowl insufficiently flushed during the later flushing operations. Such a construction of tank is especially advantageous where the supply of water is slow or under low pressure, or where water is being drawn in other parts of the building, or where the water supply is temporarily cut off, as, for example, during alterations or repairs in the plumbing work. The tank of defendant's closet approximates much more closely to what are known as "single-charge" tanks, in that there is no separate reservoir for holding the reserve of water, distinguished from a flushing chamber or service box, but the same receptacle serves to some extent the purposes of both, in that the water for the flushing is drawn directly from the tank. In a true "single-charge" tank the tank is practically emptied of water at each flushing, and I do not mean to be understood as stating that this is the case with defendant's tank, but in my opinion the tank will be so far emptied that unless it is refilled, or partially so, before the next flush, there will not be sufficient water remaining to give a full flush a second time. This fact is not due merely to the proportions or cubic capacity of the tank, but is inherent in the valve construction employed,
since with the defendant's valve it is impossible to draw all
108 of the water out of the tank except by holding the lever tilted
by the person operating the closet continuing to pull down on the chain. This is apparent, since the valve is operated by the buoyancy of the float, and when the water level descends sufficiently to expose a portion of the float above it, the float necessarily loses its buoyancy to the extent of the weight and displacement of the portion thus exposed and will consequently fall to its seat before the water level can descend entirely beneath it, as would be necessary to enable the automatic operation of the valve to drain all the water from the tank—that is, to drain the water out down to the level of the valve seat. With the Cascade tank the normal operation of flushing will drain nearly every drop of water from the reservoir tank, and so long as sufficient water remains therein to give a full flush the last flushing operation will be as perfect and as effective as the first

By Mr. TAYLOR: Counsel for defendant object to all that part of the answer given this morning as irrelevant, incompetent, and immaterial to the issues in this case and amounting simply to a puffing of complainants' wares, and now give notice that they will move to have the same stricken out and expunged from the record.

Int. 17. I here show you a flushing tank and water-closet bowl. Please state if you know what they are; if so, state what they are.

Ans. The tank and bowl shown me I recognize as a tank and bowl of Henry Huber & Co.'s Cascade closet referred to in my last answer. This tank is what is known and called by them a Trombe tank, and is the same as is used with all their pneumatic closets

which have the second trap beneath the floor. The construction of this tank is the same in all essential respects as that illustrated in Fig. 1 of the Boyle reissued patent, the only difference of any consequence being in the construction of the overflow tube, which in that figure is shown as a tube passing down through the flushing valve, and consequently rising and falling with the valve,
109 being in fact a hollow valve stem, whereas in the actual construction of this tank the overflow pipe or passage is arranged at one end of the pipe close to the float-valve and is fixed in position. The service box beneath is also made longer than is shown in the reissued patent, so that it extends from end to end of the tank.

The bowl and tank referred to are introduced in evidence and marked respectively "Complainants' Exhibit Cascade Bowl" and "Complainants' Exhibit Trombe Tank."

Int. 18. At the time you prepared the application for Boyle's patent No. 291,139, what constructions of water-closet tanks were described to you operating upon the injector principle for rarefying the air in the confined air space in the outlet passage from the bowl?

By Mr. TAYLOR: Question objected to as irrelevant, incompetent, and immaterial.

Ans. Capt. Boyle described to me the constructions shown in Figs. 1, 4, and 5 of that patent. He showed me a complete tank constructed like the tank shown in Fig. 1 and showed me a drawing of the construction shown in Fig. 5 and described to me the construction shown in Fig. 4.

Int. 19. Please state whether or not Mr. Boyle showed or described to you any other construction of tanks acting upon this principle.

By Mr. TAYLOR: The last question is objected to as leading, irrelevant, incompetent, and immaterial.

Ans. The three constructions referred to in my last answer are the only ones he showed or described or suggested to me.

Int. 20. Please state whether or not at that time you were acquainted with any tanks for pneumatic siphon closets in which no service box separate from the water reservoir was employed.

By Mr. TAYLOR: Question is objected to as leading, irrelevant, incompetent, and immaterial.

110 Ans. The only construction of tanks for pneumatic siphon closets of which I was at that time aware were those disclosed in the Peters & Donald patent and in the Boyle patent No. 255,485, in both of which a closed service box or vacuum chamber is employed. I had at that time no knowledge of any construction of pneumatic tanks employing no service box. I was not at that time (which was about five years ago) nearly as well informed in regard to water-closet flushing tanks in general as I have since become, and,

in fact, my knowledge of them was chiefly confined to the pneumatic tanks shown in the patents just referred to, although, of course, I was aware of the construction of simple flushing tanks such as had been employed for flushing-pan closets and I knew of tanks having slow-closing valves such as the one shown in Boyle's patent No. 249,577, dated November 15th, 1881.

Int. 21. What effect, if any, did the instructions given you and your knowledge at that time of the state of the art have upon your preparation of the application for this patent?

By Mr. TAYLOR: Counsel for defendant objects to the question as calling for testimony which is irrelevant, incompetent, and immaterial; also statements and suggestions which the question calls for can have no bearing upon the case or upon the issues therein and opens too wide a door for broadening patents by reissues after once obtained.

Ans. Previously to preparing the application for this patent No. 291,139 the only prior pneumatic tanks of which I knew, being those referred to in my last answer, having been constructed with a reservoir chamber, and with a service box holding a single charge of flushing water and filled from the reservoir chamber and the three constructions of his new invention which Mr. Boyle described to me being also made with the reservoir and a service box holding one charge of water and filled therefrom, and Mr. Boyle's description of the invention to me having laid special stress upon the fact that the service box or flushing chamber in his new invention differs from that in the previous pneu-
111 matic tanks in that it was an open chamber instead of a closed vacuum chamber, I was naturally led to infer and believe——

By Mr. TAYLOR: Counsel for defendant objects to what the witness was naturally led to infer and believe.

Ans. (continued). And did believe at the time that it was practically necessary to the operativeness of a tank constructed according to Mr. Boyle's new invention that it should have a service box or chamber separate from the reservoir for holding a reserve of water. I clearly understood that the invention differed in principle from those which had preceded it in that the use of a vacuum chamber as the means for exhausting the air from the air pipe was dispensed with and a new means substituted for it, namely, the employment of an injector operated by the flushing water in its descent; but it did not occur to me at the time, and Mr. Boyle never called my attention to it, so far as I can now remember, that a pneumatic tank embodying this principle could be made which was not a reservoir or multicharge tank, and which consequently would not need to have the service box and the reservoir made separately, but in which the two could be combined in one receptacle to be emptied in each flushing of the closet. Mr. Boyle called my attention in his descriptions several times to the fact that he employed essentially the same means for producing an after-wash, namely, for finally breaking the vacuum

in the tank by the admission of air therefrom to the air pipe that he had employed in the previous patent, No. 255,485, and he explained to me that the service box or flushing chamber F served the purpose of insuring the sealing of the lower end of the air bell *n* at the commencement of the flushing operation, and its unsealing to finally break the vacuum towards the close of the flushing operation. He also stated to me that while he greatly preferred this method of producing the after-wash and did not consider any other method practicable, yet, so far as his new invention was concerned, some other method might be used, and he
112 referred to the method employed in the Peters & Donald patent of refilling the bowl by means of a small stream or drizzle of water diverted from the float-valve. In order to illustrate that his method of securing the flush by breaking the vacuum need not essentially be used in his new invention I sketched out a diagram, which appears as Fig. 6 in the patent No. 291,129 and which omits entirely this means of producing the after-wash. He examined my sketch and suggested the addition to it of the ball valve *g*, shown in Fig. 6, in order, as he said, to prevent the possibility of any flushing water backing over and being drawn by the suction down the air pipe *e*. In the construction shown in that sketch the chamber F has no function in connection with the securing of the flush and amounts essentially to nothing more than an enlargement or pocket in the flush pipe. In the light of my present knowledge on the subject it is evident to me now that I misunderstood to some extent what was essential to the invention, and this misunderstanding due, as I remember and believe, to the way in which the matter was presented to my mind in connection with and as an improvement upon the Peters & Donald patent and Boyle's first patent No. 255,485.

By Mr. TAYLOR: Counsel for defendant objects to this evidence touching the misconception and misunderstanding of witness as to what was essential to the original Boyle patent, since the whole language of the reissue seems to have been an after-thought so far as enlargement of the specification and claims of the reissue over that of the original patent.

Ans. (continued). Counsel has interrupted my sentence. I was going on to say that this misunderstanding as to just what was essential to the operativeness of the invention resulted in my introducing into the claims, when I drew them, a limitation which was not an essential limitation, namely, a limitation to the reservoir tank and flushing chamber, as separate elements, with a
113 valve for controlling the admission of water from the reservoir to the chamber.

By Mr. TAYLOR: Counsel for defendant objects to the last answer because the original specifications show specifically that the limitations in the claim were necessary, and it was only after broadening the specification that the chamber F or subchamber was omitted from the claims 1 and 2.

Ans. (continued). To make it clear how, while understanding clearly as I did that the invention essentially introduced a new principle, namely, the injector principle for operating pneumatic tanks, I came to introduce into the claims such an unessential limitation, I must state that it is a common practice among solicitors of patents, and a practice that is insisted upon by the Patent Office, to so frame the claims as to render them "operative," as it is said—that is, to introduce into each claim enough elements or parts to render the combination intended to be covered or protected by the claim a combination of sufficient parts to make it practically operative, so that if a machine or structure were made with the parts or elements specified in the claim, and no others, such a structure would be capable of operating. It is customary with the examiners in the Patent Office when a claim is presented containing less parts than are sufficient to make an operative combination to reject the claim and require that enough parts be added to constitute a claim for or definition of an operative combination or structure. If it had been true, as I believed at the time of drawing these claims, that a reservoir tank and flushing chamber were both essential to the operativeness of the closet tank embodying the principle of this invention, and I had drawn a claim omitting these parts or either of them, it would have been the duty of the examiner, under the well-established practice of the Patent Office, to reject such claim. Familiarity with this rule of practice causes it to become almost second nature with patent solicitors to so frame claims of a patent as
114 to introduce as many elements as are essential to make them operative, and it was so with me. I therefore introduced into the claims for this patent as many elements as I at that time believed to be essential to the operativeness of the tank, and in the broader claims, especially, I introduced as few elements as I then believed to be admissible in the tank embodying the invention which should be an operative tank. The defect in the claims by which they were thus unduly limited was thus due to my miscomprehension at that time of the exact essentials of the invention.

By Mr. TAYLOR: Counsel for defendant objects to the last answer as given by the witness as utterly incompetent. The claims as framed in the original patent were the only ones that might have been framed according to the specifications of the patent, since the entire tenor and effect of the specification made the reservoir and chamber F absolutely essential elements of the invention, and the part that is added to the amended specification in the description of Fig. 6 of the Boyle reissue is simply an attempt at an enlargement of what was conceived to be the invention originally and what was the original invention.

Ans. (continued). In brief, I drew the broader claims as claims to multi-charge or reservoir tanks, whereas essentially the invention introduced by Mr. Boyle is not in its application limited to such tanks, but is equally applicable to "single-charge" tanks, or those which give only one flush.

That I had accurately understood wherein the essential feature

of which Mr. Boyle's invention consisted is shown by the language which I used in the specification found in paragraph commencing on line 44 of page 3, namely: "It will be seen that my present invention introduces a new principle for operating double-trapped or siphon water-closets, namely, that of producing the requisite
115 vacuum by causing the falling flushing water to act as an injector and draw air along with it. I have combined with this means for securing the requisite after-wash to refill the bowl at the termination of the flushing, which is practically the same as that set forth in my said patent No. 255,485; but it is not essential that this means of securing the after-wash be used."

Int. 22. Please state when you first learned that a "single-charge" tank could be operated upon the suction injector principle.

Ans. About the last week of November, 1884.

By Mr. TAYLOR: Counsel for defendant objects to the question and answer as irrelevant and incompetent.

Int. 23. Please state the circumstances which led to your discovery of this fact.

Ans. Mr. Boyle called at my office and directed my attention to the report in the Official Gazette of November 25, 1884, of a grant of a patent to Frank B. Hanson, of New York, No. 308,358. This patent showed a "single-charge" pneumatic flushing tank, operating by an injector.

Int. 24. What conversation, if any, did you have with Mr. Boyle at that time in reference to your discovery of the Hanson patent?

By Mr. TAYLOR: Counsel for defendant objects to the question as calling for testimony irrelevant, incompetent, and hearsay, and testimony which could easily have been manufactured by Mr. Boyle, in order to lay a basis for widening the specifications and claim after Hanson had actually obtained the letters patent, the conversation having occurred at a time and place when the defendant was not present, and defendant cannot be affected by any conversation passing between Boyle and his hired counsel or solicitor.

Ans. The conversation, as I recall it, was in substance this: Mr. Boyle called my attention to the Hanson patent in the Official Gazette and expressed great surprise——

116 By Mr. TAYLOR: Counsel for defendant objects to "expressing great surprise" because it involves a conclusion and is not giving the language, though even the language itself would be incompetent. Such emotions at least ought to be kept out of this character of evidence.

Ans. (continued). As I remember his words, he said he was greatly surprised that such a patent could be issued to Hanson, and that he could not understand it because he said it was for exactly the same thing that he had done himself and abandoned, and in the course of conversation he went on and told me about his early experiments with his invention of the injector tank. I examined

the claims of the Hanson patent and told Mr. Boyle that they appeared on their face to be broad enough to cover his injector tank, and he requested me to investigate the matter and ascertain how the patent came to be issued to Hanson. Mr. Boyle and I had a long conversation about the matter, but what I have stated was the substance of what was said between us.

Int. 25. What, if anything, was done subsequent to this conversation?

By Mr. TAYLOR: Counsel for defendant objects to the question as irrelevant and incompetent.

Ans. I proceeded to investigate the issue of the patent to Hanson, ascertained what proceedings were had at the Patent Office on his application, and advised Mr. Boyle that the Hanson patent on its face clearly covered his invention, in my opinion, and that it was important for him to ascertain whether he or Hanson was the first inventor. I asked Mr. Boyle to look up the subject of his early experiments that he had told me about and ascertain their dates, and when he had done so I advised him to apply for a reissue of his patent and making substantially the same claim that Hanson had made and to demand an interference with the Hanson patent. He acted upon my advice and directed me to proceed with the
117 preparation of the application for a reissue, which I did, and which application was subsequently filed and was the application for the reissued patent No. 10826, here in suit.

A Patent Office copy of the Hanson patent No. 308,358 is here introduced in evidence and marked "Complainants' Exhibit 12."

Int. 26. Please examine the paper I now hand you and state if you know what it is.

Ans. I recognize this paper as being an assignment executed by James E. Boyle in my presence on November 26, 1881, and witnessed by me.

Int. 27. Is that your signature at the bottom of the assignment?

Ans. It is.

The said assignment is here introduced in evidence by complainants' counsel, marked "Complainants' Exhibit No. 13."

Counsel for complainants also introduces in evidence a certified copy of the assignment from Peters & Donald to James E. Boyle, dated October 27th, 1881, which is marked "Complainants' Exhibit 14."

Direct examination closed.

Cross-examination by counsel for defendant.

Mr. TAYLOR:

Cross-interrogatories:

X Int. 28. Mr. Fraser, what is your age?

Ans. About 29 years.

X Int. 29. How many years have you been a solicitor of patents?

Ans. Ever since my boyhood—about 13 or 14 years.

X Q. 30. Since which you have been constantly a solicitor of patents?

Ans. Yes. I have been engaged in no other business and devote almost all my time to that profession.

X Q. 31. Since that time have you ceased soliciting patents
118 long enough to study in a law school anywhere and graduate at that school and thereafter become admitted to the bar?

Ans. No; I have not.

X Q. 32. Have you been admitted to the bar?

Ans. No, sir.

X Q. 33. Have you studied law?

Ans. I have studied a little law incidentally. It is necessary for a patent solicitor to know some law.

X Q. 34. Where did you study law?

Ans. In my office and at my residence.

X Q. 35. Were you ever enrolled as a law student in any law school?

Ans. No, sir.

X Q. 36. Did you not attend lectures at the law school at Washington city?

Ans. Never.

X Q. 37. How long have you been the patent solicitor of James E. Boyle?

Ans. As nearly as I now can remember, I think since about 1878, or perhaps 1879.

X Q. 38. Are you acquainted with Stewart Peters or William Donald?

Ans. No, sir.

X Q. 39. Did you ever see either of them?

Ans. No, sir.

X Q. 40. Are you acquainted with Henry Huber?

Ans. Yes, sir.

X Q. 41. Do you know the firm of Henry Huber & Co.?

Ans. Yes, sir.

X Q. 42. Can you state of whom it is composed?

Ans. Only from hearsay. I understand its members to be Henry Huber and Adolph C. Tiedemann.

X Q. 43. By whom were you employed to solicit the patent granted to Henry Huber, No. 260,232, which is sued upon in this case—by Henry Huber or Henry Huber & Co.?

Ans. To the best of my present recollection by neither.

X Q. 44. Who paid you for soliciting in this matter?

Ans. That I cannot remember. I don't remember to whom the bill for that work was rendered.

119 X Q. 45. Was it rendered to James E. Boyle?

Ans. That I cannot say. It might have been, or to Henry Huber or Henry Huber & Co. I cannot remember which.

X Q. 46. Have you no present recollection at all, Mr. Fraser, in regard to that?

Ans. Well, I think the probability is that the account for that matter was rendered to Henry Huber personally, but I cannot be sure of this, because it is a mere detail of book-keeping to which I pay little attention, occurring several years ago, and the books of my firm, in which entries were made at that time, have been since consumed by fire.

X Q. 47. Can you state who employed you to solicit patent No. 260,232—whether it was Henry Huber or Henry Huber & Co. or James E. Boyle?

Ans. I remember that the papers in the matter were brought to me by Mr. Boyle, and that I had some conference about it with Henry Huber. I think Mr. Boyle was the one who actually instructed me to proceed with the case.

X Q. 48. When was your attention first called to the fact that Peters & Donald failed to pay the stamp duty required by the British laws of 100 pounds that was due on or before April 7th, 1881, in order to continue their British patent in force, which the complainants have put in evidence?

Ans. I cannot distinctly remember. I know that I have had a general impression regarding the non-payment of the tax on their English patent in my mind for some years, but cannot tell when it originated. The first distinct, definite recollection I have about it dates from, I think, last summer or fall.

X Q. 49. Were you not informed of that fact by Boyle on his return from Europe?

Ans. I don't distinctly remember. It may be my impression originated from information from him, but I cannot be sure.

X Q. 50. Did you not know or have notice of the fact that said Peters & Donald's British patent, which complainants have
120 put in evidence, had been marked in the register in the British patent office "expired April 7th, 1881," and did you not have that knowledge at the time you were soliciting the American issue 260,252, put in evidence in this case?

Ans. No, sir; I had no knowledge of it at that time.

X Q. 51. When did you first acquire the knowledge indicated in the last question?

Ans. I cannot say that I have ever acquired that knowledge except in so far as I may have been informed of the fact from reading defendant's answer in this case.

X Q. 52. Did not Mr. James E. Boyle, on his return from Europe, inform you that he had learned from Stewart Peters and William Donald that they had failed to pay the stamp duty of 100 pounds on the 7th of April, 1881, or at any time before that, which their patent and the grant thereof require?

By Mr. BROWNE: Question objected to as calling for hearsay evidence.

Ans. No, sir.

X Q. 53. Did you at any time while soliciting this patent No. 260,232 inform the Patent Office department of the fact that the Stewart Peters and William Donald British patent offered in evi-

dence had lapsed and become null and void and of no effect by reason of the failure on the part of said Peters & Donald to pay the stamp duty of 100 pounds required to be paid April 7th, 1881?

Ans. I don't remember giving the Patent Office any such information, but if I did the record at the Patent Office will show it.

X Q. 54. Whatever connection, then, you had with the soliciting this patent No. 260,232 appears in the files of the Patent Office. Is that so?

Ans. The files at the Patent Office will show all the proceedings had in connection with the soliciting of this patent in so far as they were reduced to writing, and to that extent will show my entire connection with it.

X Q. 55. You made no representations other than those in writing, then; is that so?

121 Ans. No, sir.

X Q. 56. It is not so? Then what representations did you make, other than appear in the Patent Office, in writing touching the granting of letters patent 260,232 here in evidence?

Ans. I had personal arguments with the examiner to the effect that some of the patents he referred to as anticipating Peters & Donald invention, as he believed, did not in fact anticipate it.

X Q. 57. Did you, in any personal interview with the examiner of patents or any one connected with the Patent Office, disclose the fact that the British letters patent that the complainants offered in evidence had ceased and become null and void April 7th, 1881, for failure to pay the stamp duty of 100 pounds?

Ans. No, sir.

X Q. 58. Did you not know that fact at the time you were soliciting this patent?

Ans. My recollection is that I believed at that time that the English patent had lapsed by reason of failure to pay the stamp tax.

X Q. 59. How did you get that information?

Ans. That I cannot remember; perhaps from Mr. Boyle, as I have stated.

X Q. 60. Did you communicate that fact to Henry Huber?

Ans. At that time?

X Q. 61. No; during the time you were soliciting letters patent 260,232.

Ans. I cannot distinctly remember, but I think I did.

X Q. 62. Did you communicate the fact to Henry Huber that said British letters patent had lapsed and ceased and become null and void and ceased as early as April 7th, 1881, during the time that you were soliciting this patent 260,232 and before this last-named patent was issued?

Ans. I thought I had already answered that as well as I can, but will say, however, that I have an indistinct recollection that several years ago Mr. Huber or Mr. Boyle, I cannot recollect which, asked

122 my opinion as to the status of the American patent for Peters & Donald's invention. I gave them an opinion on that subject, but whether it was oral or written and whether it was before

or during or after the pendency of the Peters & Donald application for their United States patent I cannot now recollect.

X Q. 63. You have not answered the question. I am not asking you when you gave an opinion, but I am asking you if you communicated the fact to Henry Huber while you were soliciting this patent No. 260,232 that the patent in England had ceased and become null and void by failure to pay the stamp duty of 100 pounds, which was due by the terms of the patent April 7th, 1881?

Ans. No; I do not think I ever communicated to him all that.

X Q. 64. Did you communicate to him any part of that while you were soliciting this patent and before issue?

Ans. That, as already stated, I cannot recollect, not being able to remember the date of the opinion, which, according to my recollection, I gave to him or to Mr. Boyle.

X Q. 65. Did you converse with Mr. Boyle over this matter of the failure to pay the stamp duty at any time before this patent 260,232 was issued?

Ans. I believe I did.

X Q. 66. Don't you know you did?

Ans. I know I conversed with somebody about it——

X Q. 67. While you were soliciting the patent?

Ans. —and feel confident it was either Mr. Boyle or Mr. Huber.

X Q. 68. That is, you conversed with some one about it while you were soliciting this patent and before it was granted?

Ans. Yes.

X Q. 69. If you conversed with Boyle about it, it was before he made the assignment to Henry Huber, was it not?

Ans. Not necessarily.

X Q. 70. After Boyle made an assignment to Henry Huber, who did you consult with regard to this matter—Boyle or Huber?

123 Ans. I think at different times I consulted with both of them. I think I spoke of the matter more frequently with Mr. Boyle than with Mr. Huber.

X Q. 71. Was Boyle at that time in Mr. Huber's employ?

Ans. That I do not know.

X Q. 72. Were you in the employ of both Boyle and Huber?

Ans. In my professional capacity I was employed sometimes by one and sometimes by the other on different matters.

X Q. 73. Were you, in 1881, acting as solicitor for both these parties, James E. Boyle and Mr. Huber?

Ans. I know that I was acting for Mr. Boyle during that year, but as to Mr. Huber, I cannot distinctly remember.

X Q. 74. For whom did you draw the assignment put in evidence, Exhibit No. 13, of James E. Boyle to Henry Huber; was it at the request of Henry Huber or James E. Boyle, and who paid you for that service?

Ans. These are minute routine details, matters of such small importance that I never, in the course of my professional experience, gave them sufficient attention to be able to testify as to them positively after a lapse of several years. I can only state that my im-

pression is that Captain Boyle asked to have that assignment prepared.

X Q. 75. Was it delivered to Mr. Huber after it was prepared, or was it sent direct to Washington for record?

Ans. I have no recollection on that subject. I am not sure that I attended to that matter at all myself; such things are usually taken in hand by our clerks.

X Q. 76. Were you ever paid a fee by Stewart Peters and William Donald?

Ans. No, I think not; certainly not directly.

X Q. 77. In your direct examination, Mr. Fraser, you testified that Fig. 6, shown in the Boyle original and reissued patents, were sketched by yourself, did you not?

Ans. My recollection is that I so testified.

X Q. 78. When and where did you sketch it?

124 Ans. At my desk in my office and at the time when I was preparing the application.

X Q. 79. State whether Figs. 1, 2, 3, 4, and 5 were sketched by Mr. James E. Boyle; not in their perfected form as they appear here, but substantially as they appear in the original and reissued patent.

Ans. Fig. 5 was so sketched by him—that is, he showed me a rough pencil drawing of it. As to Fig. 4, my only recollection is that he described it or spoke of it, referring to his previous patent, No. 249,577, with which I was familiar and which at once gave me the idea. Fig. 2 and 3 I sketched myself, in order to use them as diagrams to illustrate the operations more clearly than is shown in the rather involved construction shown in Fig. 1.

X Q. 80. Did Mr. Boyle inform you that the outlet of tank E should be larger than the outlet of the flushing chamber F?

Ans. Yes.

X Q. 81. Did he state to you that there was a necessity for that or a reason for it?

Ans. He stated——

X Q. 82. I ask yes or no; I am entitled to that.

Ans. He did not state that there was a necessity for it. He did state there was a reason for it.

X Q. 83. What reason did he state there was for it?

Ans. The reason he stated was that when the valve was opened the water should enter the service box faster than it could escape therefrom, so that it should quickly fill the service box in order that it might run out therefrom after the valve is closed, thereby enabling the flush to be of greater duration than the time when the pull was held.

X Q. 84. In his original sketch that he presented to you was there shown a tank, as appears in Fig. 5 of the original and reissued patent, with a chamber underneath it, which in the original patent is marked F, substantially as shown in this Fig. 5?

Ans. Yes; to the best of my recollection, his drawing was essentially the same in construction as Fig. 5.

125 X Q. 85. Did he describe the lower chamber as a chamber? Did he call it that in talking to you about it?

Ans. He always called it the service box.

X Q. 86. Why did you call it, then, a chamber in the original patent all the way through?

Ans. Because it had been so called in the Boyle patent No. 255,485 and the Peters & Donald patent, both of which I was familiar with, and to the former of which I found it necessary or advisable to make reference in the specification. I used this term for the sake of consistency.

X Q. 87. Did you solicit patent 255,485 for Mr. Boyle?

Ans. Yes, sir.

X Q. —. In that patent, then, this under chamber is designated as chamber F, is it not?

Ans. I believe it is referred to as flushing chamber F.

X Q. 89. Mr. Boyle read that patent over after you had prepared the specification, did he not?

Ans. I think so, as it was his general custom to read the specifications.

X Q. 90. Did he suggest then and there that service box would be a better term than chamber F?

Ans. I don't remember that he did.

X Q. 91. Mr. Frazer, is it not true, that the first time the idea of "service box," in lieu of "chamber F," dawned on your mind was when you tried to make the reissue cover what Hanson's patent did? Is that not about the time it first struck your mind?

Ans. No; I was familiar with service boxes to some extent before that time.

X Q. 92. Yet in two patents which you had solicited for Mr. Boyle you used the word "tank" for the upper receptacle for water and "flushing chamber" for the lower one, did you not; all the way through the patents, did you not?

Ans. My recollection is, without looking at the patents, that the water reservoir cistern was referred to as the reservoir tank, and that the chamber which I have called in my testimony the
126 vacuum chamber is generally referred to in those patents as a closed flushing chamber. In Boyle's patent No. 255,485, as I remember the specification, the words "service box" were used with reference to a chamber between this vacuum chamber and the flushing pipe, which I think was lettered G. I am testifying now entirely from memory.

X Q. 93. Was it on the first occasion that Mr. James E. Boyle called upon you to solicit 291,139 that you sketched Fig. 6?

Ans. No, sir.

X Q. 94. How frequently had you had interviews with him before you made that sketch, Fig. 6—that is, touching the solicitation of this patent?

Ans. My recollection as to the number and especially as to the frequency of the interviews is very vague, but I remember that he first described the idea to me several months before the application was filed, probably five or six months, and, to the best of my recol-

lection, he had probably four or five interviews with me about the matter during the interval.

X Q. 94½. Is it not a fact that in this sketch 6, which you said you made and which is shown on the original Boyle patent No. 291,139, that there is a tank E and also a flushing chamber shown under it?

Ans. Yes.

X Q. 95. Does not Fig. 6 also show a pipe leading out from the subchamber F into the open air or somewhere else to ventilate it?

Ans. Yes; this chamber is vented to the outer air just as the chamber called a service box in patent No. 255,485 is vented to the outer air.

X Q. 96. Did you not state in your direct examination that Boyle showed you no sketch which did not require two tanks to operate his invention mentioned in letters patent No. 291,139?

Ans. No.

X Q. 97. Did Mr. Boyle say to you that one tank was sufficient to operate the invention covered by his letters patent 291,139 at any time before said patent was granted?

127 Ans. I have no recollection that he did, but am unable to testify positively that he did not.

X Q. 98. Did you not testify in your examination-in-chief that your best impression was that he did not?

Ans. I cannot remember the exact substance of what I testified in my examination-in-chief, but my best recollection is that he did not tell me that a single tank without a service box could be used until after his patent had been granted.

X Q. 99. He never told you that until Hanson's patent had been granted, did he, according to your best recollection?

Ans. It was then that he first told me of it that I remember.

X Q. 100. When you had prepared specifications 291,139 and the claims thereto, as filed with the original specification, did Mr. Boyle read them?

Ans. I cannot remember distinctly that he read those specifications, but I believe he did, because it was his almost universal custom to read over the specifications I prepared for him before he signed them.

X Q. 101. Did he not always read over the specifications which you prepared for original patents before he signed them?

Ans. I cannot say that he did always.

X Q. 102. Name the instances when he did not.

Ans. I do not remember any occasion where I could say he did not. I think he always, so far as my knowledge went, took the specifications and looked them over.

X Q. 103. Critically and carefully?

Ans. That I cannot say, as I have no means of knowing, but I know that he very rarely made any criticisms or suggestions.

X Q. 104. You generally got pretty full information from him of what you wanted before you drew the specifications, did you not?

Ans. Yes; I always made it a rule with him, as with other clients, to ask about everything connected with the invention that I could think of as having any bearing upon it.

128 X Q. 105. You always do that, do you not, Mr. Fraser, in soliciting patents?

Ans. That is my practice, but sometimes it may occur that I do not happen to think of all the questions about which I might profitably ask an inventor.

X Q. 106. You had discussed the matter of this invention 291,139 made by James E. Boyle, for six months, you have said, before you finally prepared the specifications. Is that not so?

Ans. That is not the idea that I intended to convey. He first spoke to me about it and explained to me some months—probably about five or six months—before the application was filed, but from that time until, I think, about six weeks before it was filed I do not remember that the subject was spoken of, except incidentally, and for a moment only, upon one occasion in the interval.

X Q. 107. But during six weeks before application was filed for letters patent 291,139 you had frequent interviews with him, did you not?

Ans. I had one interview with him when he directed me to frame the application and another interview when he looked over the specifications. Those are all that I can distinctly remember, although it is quite probable that he called on me once, perhaps even twice between.

X Q. 108. Then you do recollect now that he looked over the specification, do you, of patent 291,139?

Ans. I do not recollect his looking them over, but I know that he must have called at my office to sign the application, as was his invariable custom, and it is that occasion that I refer to.

X Q. 109. Well, did he look these specifications over at that time? You said he did a moment ago.

Ans. I suppose he did; but, as I have already several times stated, I do not distinctly remember of his looking over, in my presence and to my knowledge, the particular specification of the application for this particular patent.

X Q. 110. If he did not read them himself you read the specifications over to him before he signed them, did you not?

129 Ans. As to this particular case I cannot remember. Sometimes I read the specification to him, sometimes my partner read them to him, sometimes he took them away with him, and sometimes he looked them over by himself in my office.

X Q. 111. Do you mean that he took them away with him before he signed them preparatory to sending them to the Patent Office and after they were prepared for signature?

Ans. My recollection is that in one or two instances he took the prepared papers home with him to look them over, as he said.

X Q. 112. Is he an intelligent man?

Ans. I consider him very intelligent, and especially so in reference to plumbing inventions.

X Q. 113. Is he the inventor of many patents relating to plumbing goods—plumbing apparatus?

Ans. Yes.

X Q. 114. How many to your knowledge?

Ans. I think I have taken about twelve or fifteen patents for him, and I know he has patented considerably more than that.

X Q. 115. How many did you solicit for him on plumbing apparatus prior to soliciting patent 291,139 for him—about?

Ans. Making a rough estimate, I think that the firm in which I was a partner at that time had solicited some eight or ten patents for him, with which I had more or less to do, and that I had taken personal and exclusive charge of probably four or five of his applications.

X Q. 116. When patent 291,139 to James E. Boyle issued from the Patent Office was it received by the firm of which you was a member?

Ans. Yes.

X Q. 117. When it was received by your firm from the Patent Office what did you do with it?

Ans. That I cannot remember positively with respect to this particular patent, but in the ordinary course of business we would have sent it directly to Mr. Boyle, and I suppose he did. Such purely formal matters were usually attended to by our clerks.

130 X Q. 118. Did you ever explain to Mr. Boyle or did he know without explanation what force and effect claims have in regard to the scope of the patent?

Ans. I have several times explained to him the scope of the claims in his patents and in applications that I have drawn for him, but I don't think that he has a very clear conception of the meaning of a claim or the principles upon which claims are construed.

X Q. 119. How do you know he has not?

Ans. My belief on the subject is derived from my conversation or intercourse with him during several years past when such matters have been discussed.

X Q. 120. Is he a man of good English education?

Ans. I don't think that I ever received a letter from Mr. Boyle or anything written by him beyond his signature, so that I am unable to judge of his abilities in that direction, but from conversation with him I consider him to be a fairly well educated man, but a man without literary or legal training.

X Q. 121. Is he intelligent enough to know what the word "bowl" means as applied to plumbers' goods?

Ans. Yes, I should think he was.

X Q. 122. Or "soil passage"?

Ans. Yes; I think he is familiar with all the terms used by plumbers; he is a practical plumber.

X Q. 123. He knows the meaning of words applied to plumbers' goods and apparatus as well as you do, does he not, or any one here present?

Ans. Well, I think that he knows a great many technical terms and facts in that trade with which I am unfamiliar, and it is probable that I know some technical terms that he might not exactly understand, he being rather a practical man than a scientific man.

X Q. 124. I call your attention to claim No. 1 of Boyle's patent 291,139 and will ask you whether there is any word in that claim

that in your judgment Mr. Boyle would not understand the meaning of. If so, tell what that word is—that is, and understand it at once when he read it.

Ans. I cannot testify to the operations of Mr. Boyle's mind,
131 but I think all the technical terms used in this claim would be understood by him except, perhaps, the meaning of the words "combined and arranged substantially as set forth," which are rather legal than technical.

X Q. 125. Do you think Mr. Boyle is so ignorant that he would not know the meaning of the word "combined" when he has been the inventor of a dozen patents or more?

Ans. I think he knows some meanings of the word "combined," but not the exact legal meaning applied to it in the patent law.

X Q. 126. Did you become his schoolmaster in regard to that—to the technical meaning of the word "combined," and after the Hanson patent was granted?

Ans. I explained to him during our discussion of the Hanson patent the legal interpretation of a combination claim, and showed him how it was that Hanson's claim covered his structure, when his claim did not cover Hanson's. Whether he clearly apprehended the subject or the legal status of the respective claims I am unable to state, not knowing the workings of his mind.

X Q. 127. Is it not true that every claim in the original letters patent No. 291,139 are combination claims?

By Mr. BROWNE: Counsel for complainants objects to the last question as calling for a question of law on the part of the witness, the answer to this question depending upon the legal construction of the claims and the claims speaking for themselves.

Ans. They are what in my profession are known as combination claims, as are nearly all the claims granted in mechanical patents of late years.

X Q. 128. When Boyle applied to you to solicit patent 291,139 did he claim that he was the original inventor of what you have called injectors as applied to anything and everything?

Ans. No; as applied to one particular thing.

X Q. 129. Did he not claim simply and only that he had invented certain combinations of old things?

132 Ans. I don't think he used the word "combination" at all in his description to me, nor did he undertake to define or state the scope of the claims he wished to make in his patents; but he laid great stress, in his description to me, on the fact that in his new tank he exhausted the air or produced a partial vacuum by what he called a "trombe" and which I called an "injector," and also upon the fact that this trombe superseded the vacuum chamber in his earlier patent.

X Q. 130. And as a matter of fact, in showing you how he applied the injector, he illustrated it simply by figure No. 5, as shown in patent 291,139, did he not—I mean at the time when and before you solicited said patent?

Ans. He did the first time he ever showed me any sketch or draw-

ings of his ideas, but subsequently and before I prepared the application he sent a complete operative tank to me, like Fig. 1 of the patent drawing.

X Q. 131. In that construction was the outlet from tank E larger than the outlet from the supply chamber F?

Ans. The proportions were the same as shown in the drawings, as I remember them,

X Q. 132. And did he tell you that that water-closet sent to your office fully embodied his invention?

Ans. Well, not in those words; he said that was his new tank or something to that effect and then explained it to me.

X Q. 133. Well, in his explanation to you he told you what function tank E performed and what function chamber F performed to the various parts, did he not?

Ans. No, I think he took it for granted that I understood the combination of those parts and confined his description to me almost entirely to the action of the "trombe" in exhausting the air and to the construction of the air-bell device for breaking the vacuum in order to secure the after-wash, and he impressed upon me that this latter feature was in principle the same as that in his
133 first patent, whereas the "trombe," as he called it, was essentially different. He also described the difference in proportions between the inlet and outlet openings.

X Q. 134. What did he say the object was in having the proportions as they are described in said patent 291,139—that is, the outlet from chamber E and the outlet flushing chamber F?

Ans. The principal object, as he stated it to me, was to enable him to dispense with the valve at the outlet *i*, as he had at first proposed to use the construction shown in his sketch and represented in Fig. 5 of the patent. The principal object, of course, was to enable him, as he said, to utilize the principle of "breaking the vacuum" to secure the after-wash, which he did by causing the water to rise in the chamber F, and thereby seal the air bell.

Hearing adjourned to Saturday, February 25th, 1888, at 10 a. m.

SATURDAY, *February 25th*, 1888.

Appearances: Same as before.

Cross-examination of Mr. FRASER continued.

By Mr. REX:

X Q. 135. Mr. Fraser, you are a theoretical mechanic or mechanical expert rather than a practical one, I believe?

Ans. Yes.

X Q. 136. Have you ever engaged in the manufacture of water-closets?

Ans. No, sir.

X Q. 137. You do not know anything from your personal knowledge about the cost of constructing a water-closet, do you—from your own personal experience?

Ans. My own experience, no.

X Q. 138. Have you ever dealt in water-closets?

Ans. Never.

134 X Q. 139. Have you any means of knowing from your own experience and observation how long the different parts of a water-closet will last?

Ans. Not from my own personal experience. My opinion on that subject is derived entirely from my general knowledge of mechanics and general familiarity with mechanical elements and from my knowledge of the principles governing their action.

X Q. 140. What you know about water-closets, then, has been derived from your experience in soliciting patents and in examining books and writings or patents in reference to water-closets, I believe?

Ans. To a large extent it has. I have also examined numerous water-closets, tested their operation, and observed their behavior under different conditions and their relative advantages and disadvantages.

X Q. 141. You have stated that the water-closet tank made an exhibit in this case and marked "Defendant's Tank" would, when combined with other parts necessary, in your opinion, to make it an operative closet, be covered by claim 1 of the reissued patent to James E. Boyle, No. 10826, sued on in this case. What would be the elements forming defendant's closet when so constructed?

Ans. They would be the bowl and upper trap marked "Exhibit Defendant's Bowl," and the lower trap, which is the usual plumber's lead trap, commonly set beneath the floor and forming thereby a confined air space between the two traps in the soil passage, the air pipe leading from that confined air space, the flushing pipe through which water passes to flush the bowl, and the injector arranged in connection with the flushing pipe, so that the flushing water falls through it, and also connected with the air pipe, so that the fall of flushing water through it serves to suck air from the air pipe. The tank or reservoir is not specified as an element of this first claim, but obviously the tank or some other source of water to the flushing pipe is essential to the operativeness of such combination, and is included by implication in the claim, as I understand it.

135 X Q. 142. In the drawings annexed to reissued patent 10826 just referred to there is a part lettered I, situated beneath the flushing chamber F, which is called in that patent an injector. Is there anything connected with the exhibit marked "Defendant's Tank" formed in the same way as that part marked I in those drawings?

Ans. No; the injector in the defendant's tank is somewhat differently constructed in matters of detail.

X Q. 143. Please state of what the differences consist.

Ans. In the injector shown in Boyle's reissue the water passes down in the centre and the air is drawn in through an annular space around it, while in the injector in Exhibit Defendant's Tank the water passes through an outside annular space and the air is drawn down in the centre. This is the principal difference, aside from

mere structural details. In respect to such details the injector shown in Boyle's reissue is made in a single casting, while the injector in Exhibit Defendant's Tank is made in two castings, one of them the outer shell and the other the part I have referred to as the trumpet tube, or which may be called a flared nozzle, and which is made adjustable in the shell by reason of the screw attachment thereto.

X Q. 144. In the injector shown in the reissued drawings referred to the tube or nozzle through which the flushing water passes is surrounded by an annular space, which in practice, and when the injector is in operation, forms a small vacuum chamber, does it not?

Ans. In operation there is certainly a rarefaction in that annular space, and in that sense it forms a small vacuum chamber.

X Q. 145. In the defendant's device which you have termed an injector is there any such chamber surrounding that portion of the device through which the water passes?

Ans. In the defendant's injector the parts are transposed or reversed so that the small vacuum chamber, as you have designated it, is the chamber or space inside of the trumpet-shaped tube
136 or nozzle. This space communicates with the air pipe substantially the same as the outer or annular space or chamber does in the injector shown in Boyle's reissue.

X Q. 146. How does the complainants' device operate and what does it perform when combined with the other parts of their closet?

Ans. The complainants' injector operates by the downflow of flushing water through it to create a suction in the manner common to injectors generally and to communicate this suction through a more or less circuitous air passage or pipe so that eventually it creates a rarefaction or partial vacuum in the air space between the two traps in the soil passage beneath. This is as detailed a description of the operation as will apply to all of the constructions shown in the drawing of Boyle's reissue, if that is the intention of the question.

X Q. 147. What effect is produced by this rarefaction of the air in the space between the two traps referred to?

Ans. Its effect is to relieve the surface of water on the lower or further side of the upper trap and the upper or nearest side of the lower trap from atmospheric pressure, so that the atmospheric pressure acting on the large surface of water in the bowl will force the water out from the bowl through the upper trap in the confined air space between the two traps and down through the lower trap to an extent dependent upon the rapidity and degree of rarefaction.

X Q. 148. Upon what principle does the injector shown in the drawings of the Boyle reissued patent act, and how and why does the water which passes through the central passage of the injector draw air from the chamber surrounding it to the pipe *e*?

Ans. It is well known as a philosophical principle that a current of one fluid always tends in flowing to carry along with it to some extent a current of another fluid to which it is in close proximity. This is especially the case where the flow of the inducing current

is contracted or confined by a passage or pipe and the current
137 of induced fluid is confined also in a contracted passage or pipe so that the force of the inducing current is not spent or dissipated but is concentrated upon the induced current. This principle is practically applied in the various forms of injectors that are known in the arts, such as those wherein a current of steam is employed to give motion to a current of water; where a current of air is employed to give motion to a current of liquid; where a current of steam is employed to draw along with it a current of air, and where a current of water is employed to move a current of air.

The injector shown in the Boyle reissue is of the latter class, a current of water coming into contact with air and by its motion drawing the air along with it. This result of drawing the air is due chiefly to suction or the formation of a partial vacuum, resulting from the rapid fall of the stream of water which partly drives the air before it as it descends the flushing pipe, this driving action increasing with the increasing velocity of the water as it falls The action is also partly due to friction between the two fluids so that the air is carried to some extent by some frictional adhesion to the water. This action, however, I believe to be very slight compared with the suction action, where each drop or particle of water acts, as it were, as a piston to force the air along ahead of it.

X Q. 149. In the defendant's device the water surrounds the air tube, does it not?

Ans. In the injector, yes.

X Q. 150. In passing down through the annular space surrounding the mouth of the air tube it naturally forms beneath the mouth of the air tube in the shape of a funnel, does it not?

Ans. In defendant's injector the water passes beneath the trumpet-shaped nozzle in a converging direction towards the center or axis of the injector, and the shape of the annular opening is such as to tend to throw the water directly to the center, while the weight of the water curves it at the same time downward, hence the shape of the fall of the water at that time would be somewhat of an approximation to a funnel.

138 X Q. 151. The effect of this would be to suck the air from the air tube down into the center of the column of falling water, would it not?

Ans. That would be the tendency, I should think.

X Q. 152. Then the injector 10826 is so constructed that the particles or drops of water passing through the nozzle—the contracted portion thereof—push the air before them, and in the device which you term the defendant's injector the falling water pulls the air after it, according to your views?

Ans. No; I see no such distinction. In both devices, if the proportions are substantially alike, there will be the same pushing and the same pulling action.

X Q. 153. Why do you term the defendant's device an injector, inasmuch as it is not formed in the manner in which the instrument shown in the reissued drawings is formed and which is referred to in the reissue 10826?

Ans. There are numerous types and constructions of injectors, all of which act on the same general principle and produce the same general effect. The particular constr-ction shown in the Boyle reissue is according to one of these types. The particular construction embodied in Exhibit Defendant's Tank is constructed according to another of these types. In matters of detail they differ; in general operation and in the principle on which they act they are identical.

X Q. 154. Do you mean to assert that when Mr. Boyle made the invention or alleged invention described in his reissued patent 10826 it was known to the art, mechanics, and those conversant with mechanics and hydraulics that a device like that used by defendant and to which you have referred would do the work which the injector shown in the drawings of the Boyle reissued patent 10826 performs?

Ans. I do not mean precisely that, as I understand your question; but it was known that injectors could be made either with the inducing current passing from the central nozzle and the induced current entering from an annular space, as in the particular type shown in the Boyle reissue, or with the inducing current passing through an annular space and the induced current entering at the center. An example of the latter is found in the patent of Shapley, No. 54615, dated May 8, 1866. The action of this injector is substantially the same as that in Exhibit Defendant's Tank.

139

X Q. 154. The effect of the passage of water through the complainants' injector, or through an injector constructed in the manner shown in the drawings attached to the reissued patent referred to down through a pipe like that shown in those drawings is to draw or suck air through the air pipe connected with the injector and from the space between the two traps connected with the bowl, and cause the siphon action to start in the closet shown and described in the Boyle patents, is it not?

Ans. Yes.

X Q. 155. Was it known at the time Mr. Boyle made his invention, described in the patent I have referred to, that water passing down through the defendant's device, if such device were arranged in combination with a flushing tube and with two traps like those shown in the Boyle patents, would cause a rarefaction of the air in the space between those traps?

Ans. No; the construction found in defendant's device was not known at that time, so far as I am aware.

X Q. 156. What portions of it were known and what portions of it were unknown?

Ans. The bowl with two traps in the outlet or soil passage and the confined air space between the two traps, and an air pipe extending thence upward, and a flushing pipe for flushing the bowl, and a tank for supplying the flushing pipe with water, and means generally in connection with the tank for rarefying the air in the air pipe upon the flushing operation were known in combination with one another. Injectors generally were known. More specifically injectors of the character where the inducing current

passes through an annular space and the induced current is drawn into the center of the inducing current through a nozzle, around which nozzle the inducing current flows, were also known. The precise combination of such an injector with such a pneu-
140 matic closet as is constituted by the combination first referred to in my present answer had not then been made to my knowledge.

X Q. 157. The question is not whether or not the combination you have described was known at the date of Mr. Boyle's production of his supposed improvement. The question is simply as to whether or not it was known at that time that the passage of water through such a device as the defendants use could create a vacuum in the chamber, sealed chamber, communicating by means of a pipe with that device?

Ans. Does the question include a sealed chamber or space generally, or a sealed chamber or space in a water-closet?

X Q. 158. Outside of a water-closet. I wish you would answer from memory.

Ans. I do not remember specifically any such combination, although I think that an injector or device operating analagously thereto had been employed for exhausting air. The Sprengle mercury pump operated somewhat in this manner and the space from which it exhausts the air may be considered a sealed chamber, I suppose.

X Q. 159. You have stated in your direct examination that the use of injectors for sucking air or water by means of a passage of a current of water through them was old and well known to the art at the time Mr. Boyle made his invention, have you not?

Ans. I believe that that is about what I testified; certainly that is my understanding as to the facts.

X Q. 160. They had been used as air pumps and as water pumps, had they not?

Ans. Yes.

X Q. 162. They were then one class of suction pumps, were they not?

Ans. Yes; they might be so considered.

X Q. 163. It was known that they could be used as such for pumping water or pumping air, was it not?

Ans. Yes.

X Q. 164. Therefore when Mr. Boyle made his invention he did not add to the knowledge of the world anything concerning
141 injectors and what they would perform simply as pumps. I do not mean he did not make a new combination, but that he did not add to the knowledge of the world anything so far as injectors themselves were concerned?

Ans. No; he did not add anything further than to discover and invent and disclose to the world a new use or applicability for injectors.

X Q. 165. What he made was then, if anything, simply a new combination?

Ans. Yes.

X Q. 166. You have stated that the reservoir tank shown in Fig. 6 of the Boyle reissue and the flushing chamber F combined as shown in Fig. 6 and having an opening from the tank into the flushing chamber larger than the opening from the flushing chamber into the flushing pipe were old at the time Mr. Boyle made his invention, have you not?

Ans. As applied to water-closet tanks generally they were, and as applied to pneumatic water-closets such a tank had been disclosed in Mr. Boyle's previous patent No. 255,485.

X Q. 167. The flushing tank in the combination of reservoir tank and flushing chamber previously used and having the peculiarities I have just mentioned also had an air pipe connected with it as shown in Fig. 6 of the Boyle reissued patent, had it not?

Ans. No.

X Q. 168. I believe you have stated that such a tank and flushing chamber are shown in the Boyle patent 255,485—that of March 28th, 1882. There is an air pipe opening from the outer air into that flushing chamber?

Ans. If by air pipe you mean a vent pipe to the outer air, there is; but I understood your previous question to refer to an air pipe or vacuum pipe connected with the confined air space between the two traps.

X Q. 169. No, that is not my meaning at all. I will repeat the question and try to make myself a little more clear. Was not everything shown in Fig. 6, above injector I, including the opening of the flushing tank at the bottom thereof, old at the time Mr. Boyle made his supposed improvements?

142 Ans. Yes; if the injector and air pipe *e* and passage *t* are omitted from Fig. 6, what remains was known prior to his invention.

X Q. 170. What are the functions of the chamber F of the closet shown in Fig. 1, reissue 10826, and in Figs. 2, 3, 4, and 5 of that patent?

Ans. The chamber F has two functions in those constructions: 1st, that it constitutes a pocket like any service box for holding a quantity of water suddenly admitted to it and discharging it more slowly to the flushing pipe; and, 2nd, it has the function, in connection with the air bell *n* and the pipes *e t*, communicating therewith, of providing for an after-wash by effecting the final breaking of the vacuum in the air pipe before the last of the flushing water has run out down the flushing pipe, thereby rendering the injector inoperative toward the close of the flushing operation.

X Q. 171. Then this chamber has for its object the breakage of the vacuum, so as to permit an after-wash, as well as that of making unnecessary to hold the valve controlling the flushing water, off its seat for a long period of time?

Ans. Yes; it has this double function, as shown in Figs. 1, 2, and 5 of the drawings, but not in Fig. 6.

X Q. 172. In the different figures shown in the drawings the special arrangements for breaking the vacuum are slightly varied, are they not?

Ans. Structurally, yes; essentially, no; except with reference to Fig. 6, which shows no method for breaking the vacuum.

X Q. 173. These forms of mechanism might be varied in connection with the flushing chamber F and perform the same functions, might they not?

Ans. Yes; one example is shown in my sketch, Complainants' Exhibit 8.

X Q. 174. Another function shown in those figures referred to—1, 2, 3, 4, and 5—is to permit the foul gases which may escape up the air pipe, in the space between the two traps below the bowl, through a vent pipe connected with this flushing chamber, and thus to the outer air, instead of allowing it to pass into the room, is it not?

143 Ans. Yes.

X Q. 175. That is an important or is it an important function?

Ans. Its importance is largely a matter of opinion. I think myself that it conduces materially to the sanitary advantage of the closet.

X Q. 176. It is important, is it not, in your opinion, to have the air pipe used in creating the vacuum between the two traps in this style of closet connected with the outer air, so as to permit gases which, as you have already stated, are apt to accumulate between those two traps to escape to the outer air?

Ans. I consider it quite desirable that the space between the two traps should be thus vented to the outer air outside of the apartment.

X Q. 177. You would consider it undesirable, and it is so considered, is it not, from a sanitary standpoint, to have that air pipe open into the air of the room instead of to the outer air?

Ans. Yes; without any vent pipe communicating to the air outside of the room, I should.

X Q. 178. You consider the construction shown in drawing, Exhibit 10, defective, do you not, because, as you have stated, the foul air between the two traps can pass, in your opinion, freely into the room through the air pipe opening into that space?

Ans. It can so pass when the closet is not in operation, and to the extent that such foul air will so pass I consider the closet shown in drawing, Exhibit No. 10, defective as compared with the closet shown in the Boyle reissue.

X Q. 179. In which of the drawings shown in the Boyle reissue?

Ans. As shown in Figs. 1 to 5 of the Boyle reissue.

X Q. 180. In Fig. 6 the vent pipe *f*, shown in the other drawings, is also shown, is it not?

Ans. Yes.

X Q. 181. And any gases passing up into the flushing chamber F will freely pass out through the vent pipe *f* into the outer air?

Ans. Yes; any gases that would be under sufficient press-

144 ure to lift the ball valve lettered *g'*, which valve would be very light in practice.

X Q. 182. Any gases which got into the chamber F would have

the same chance to escape, then, through the pipe *f*, or as good a chance, in the construction shown in Fig. 6 as they would in the constructions illustrated in the other figures shown in the Boyle reissued patents, would they not?

Ans. Yes; assuming that the vent pipe *f* is properly conducted to the roof or a flue in both cases.

X Q. 183. Is the valve *g'* or is it not a necessary feature to the construction shown in Fig. 6 in order to make the construction there shown an operative mechanism which could be used in practice as a water-closet?

Ans. No; I don't consider that valve essential. It is merely introduced to provide for a contingency which seems to me unlikely to occur in practice, and which if it did occur would not seriously derange the action.

X Q. 184. Do you know, as a matter of fact, whether if an injector formed as the one shown in Fig. 6 is, arranged and having pipes shown in that figure connected therewith, would operate to draw the air out of the pipe *e*, and that the water would not in practice and in the absence of the check-valve *g'* back up through the pipe *i*, flow thus down pipe *e*, and prevent the injector exhausting the air from between the two traps to the extent necessary in practice?

Ans. Not having made a practical test of the construction illustrated in Fig. 6, I cannt state positively what would be the effect, but in my judgment the water would not so back up. I am confirmed in this opinion from the fact that this construction, so far as the flushing pipe, air pipe, and injector are concerned and omitting the check-valve *g'*, is substantially like that in Exhibit Defendant's Tank, which I understand and believe to be operative. I am not to be understood as stating that the exact proportions constituting the injector, as shown in Fig. 6, would be actually operative in producing the requisite degree of partial vacuum, since Fig. 6 is
145 in the nature of a diagram, and no attempt was made in drawing it to give the exact proportions.

X Q. 185. The idea, then, in drawing the injector shown in the different figures of the reissue 10826 was simply to indicate that an injector should be there placed upon the principle that any mechanic called upon to manufacture the closet would understand how to proportion it so as to make it do the required work?

Ans. That was the idea with reference to the diagrams, Figs. 2, 3, and 6. Figs. 1, 4, and 5 are practical constructions—proportioned for practical use—the construction shown in Figs. 1 and 5 having been actually in use.

X Q. 186. Turning to Fig. 6, it would seem, then, from what you have said that the flushing chamber F there shown has or would have if constructed and combined with the other parts as shown in that figure necessarily two functions which it could perform as there shown: 1st, it would act as a pocket or receptacle for water passing from the reservoir tank and making it unnecessary that the valve, proportioned to the outlet there shown, to hold the valve from the seat as long as it would be otherwise necessary to hold it; 2d, its construction shown in the figure would permit the foul gases

arising from between the two traps to pass out of the pipe connecting with it, through it and the pipe *f* into the outer air, thus ventilating the space between the two traps?

Ans. Yes; except that in the case of the latter function only such gases could escape as had pressure sufficient to lift the valve *g'*.

X Q. 187. If the valve *g'* were omitted, as you say it might be in your opinion, its action in ventilating the space between the two traps would be undisturbed, would it not?

Ans. Yes.

X Q. 188. If any gases or foul air were drawn up from the blow through pipe *e*, those gases would also escape through that chamber to the pipe *f* into the outer air, would they not?

146 Ans. Yes.

X Q. 189. Then this flushing tank F would perform in part those two functions at least as shown in Fig. 6?

Ans. Yes.

X Q. 190. And it is useful also because it may be combined with other parts, as it has been combined, for instance, in fact by Mr. Boyle in the construction shown in Fig. 1, patent 10826, to break the vacuum before the cessation of the flush, and in that way fill the bowl after the siphon action has ceased. Is that not so?

Ans. It is.

X Q. 191. Then this chamber F is s-mething more in this case in its possibilities than a mere enlargement of the pipe, is it not?

Ans. Yes; if all its possibilities are utilized it is.

X Q. 192. If the diagram, Fig. 6, as it is said in the patent, is to illustrate the essential principles of the invention the other diagrams, I should infer from that, have been considered to illustrate some features which were not strictly essential. The diagram, Fig. 6, shows as elements the flushing tank, a flushing chamber beneath it, having a vent pipe, an injector arranged beneath the flushing chamber connected with the flushing pipe, in which a valve is placed. Is that not so?

Ans. The specification does not state that all the elements shown in Fig. 6 are essential, but the figure includes the elements stated in the question.

By Mr. REX: Counsel for the defendant objects to so much of the answer as is not responsive to the question, to wit, what the witness says the specification names. The question directed simply and only to the figure which appears alike in the original and the reissued letters patent. The new matter injected in the amended specification to broaden its claims and omitting some of the elements shown in figure 6 is what the defendant complains of in this case and what the witness seeks to evade by his answer, he being the solicitor who drew the reissue.

147 Ans. (continued). My answer applies to the specification of the original patent as well as the reissue.

X Q. 193. In Boyle's reissued closet, in Fig. 5, there is shown the ball valve *g* at top of the bell F. How does that work?

Ans. It is a check-valve to permit air to escape from the top of

the air bell and up into the vent pipe *f*, which closes as soon as a suction is created in the air bell during the flushing operations. In this construction the airbell *n* and upper extension of flushing chamber F′ are combined in one, a construction which necessitates such a check-valve.

X Q. 194. Is that construction a practical one—one which will work in practical operation?

Ans. It is certainly an operative one, and, in my judgment, will work well.

X Q. 195. You have described the method of breaking the vacuum in defendant's tank in connection with the parts which you say should go with it. Is that method of breaking the vacuum shown or suggested in the reissued patent granted to Mr. Boyle, No. 10826?

Ans. I do not think I have used the expression "breaking the vacuum" in connection with the after-wash operation of defendant's tank. The after-wash in defendant's task is secured in a broad sense in the same manner and in a restricted sense in a different manner from that in complainant's tank. In both, in a broad sense, the injector is rendered operative during the first part of the flushing operation and acts to produce a partial vacuum and towards the close of the flushing it is rendered inoperative, so that the partial vacuum is not maintained, thereby enabling the bowl to be refilled. In a more restricted sense the two devices differ in the means of rendering the injector inoperative toward the close of the flushing, namely, in the complainant's construction the vacuum is broken by unsealing the air pipe and admitting air into it at atmospheric pressure. In defendant's construction the flow of flushing water is so far reduced by the slow closing of the flushing valve
that the stream of flushing water has not force enough to
148 maintain the suction action of the injector, and consequently
the latter becomes impotent to maintain the vacuum.

X Q. 193. This gradual closing of the valve, to which you have referred as a means of refilling the bowl, is nowhere disclosed or described in the Boyle patent 10826?

Ans. It is not therein described specifically for the purpose of effecting the refilling of the bowl, other means being provided for that purpose, but a slow-closing valve is shown in Fig. 4 and described.

X Q. 194. That slow-closing valve in Fig. 4 is used for another purpose with tanks holding several charges of water, is it not?

Ans. For the purpose——

X Q. 195. Answer yes or no to the question.

Ans. I cannot answer that with yes or no, if you insist upon that form of an answer.

X Q. 196. Is not the slow-closing valve you refer to used in the construction shown in Fig. 4 simply in connection with the filling of the chamber F?

Ans. It certainly is used for filling the chamber F.

X Q. 197. Please answer the question yes or no. I said simply used.

Ans. If by the word "simply" it has no other function, I should answer no.

X Q. 198. What is its other use?

Ans. It has in addition the function of shutting off the inflow of water gradually, so that if no other means of securing an after-wash for refilling the bowl were employed, this alone would be sufficient for that purpose, provided only that the proportions of the injector and the adjustment of the valve were such relatively to one another that the restricted flow when the valve was nearly closed would be insufficient to enable an injector to maintain the regular partial vacuum.

X Q. 199. Are they shown to be so constructed in this figure 4?

Ans. It is impossible to state. The proportions are not shown.

X Q. 200. Are they described as being useful for that purpose in the specifications?

149 By Mr. BROWN: Objected to as calling for hearsay evidence, the specification speaking for itself in that respect, and the opinion of the witness as to what the specification states being immaterial.

Ans. No; I do not find it so stated.

X Q. 201. You knew that when you gave your answer, did you not?

Ans. That was my impression, but since then I have read over that part of the specification and refreshed my memory. Your former question, as I understand it, did not call for a statement of what the specification described, but as to the capability of the operation of the parts referred to.

X Q. 202. In describing the state of the art prior to Mr. Boyle's patent reissue 10826 and prior to his invention and the improvements therein described—that is, the alleged improvements—you stated that the Peters & Donald invention described in United States letters patent 260,232 was the pioneer of pneumatic water-closets, to the best of your knowledge and belief. Am I correct?

Ans. That is the substance of what I testified, as I recollect it.

X Q. 203. Did you ever see the Peters & Donald closet?

Ans. One constructed as shown in the patent; no.

X Q. 204. Would a closet constructed like the one shown in Peters & Donald's patent referred to, described in the specification of that patent, be an operative construction?

Ans. With one trifling exception, it would, in my opinion.

X Q. 205. What is that exception?

Ans. I believe their specification states, as I remember it, that it is proposed to have a slight compression of the air in the confined air space between the two traps in order to hold the water in the upper trap at a higher level on the side of the bowl than in the other leg of the trap. I am inclined to doubt whether that result could be realized in practice. Certainly, to realize it would
150 require that the check-valve in the vent pipe leading from the air pipe to the roof should be a weighted valve, its weight being in proportion to the compression of the air.

X Q. 206. The check-valve referred to might be dispensed with entirely and yet leave the mechanism operative, might it not?

Ans. No, sir.

X Q. 207. Might not the vent pipe, 16, shown in the drawing attached to the Peters & Donald patent, be dispensed with entirely and yet leave the mechanism operative, might it not?

Ans. No; not unless some equivalent means were provided to enable the air to escape from the flushing chamber or vacuum chamber during the refilling thereof.

X Q. 208. Are you positive about that?

Ans. Yes.

X Q. 209. Are you as certain about that as you are to the other points about which you have testified?

Ans. I am more certain of it than I am about some things to which I have testified.

X Q. 210. Would not it be the fact that when the water is admitted into the reservoir tank in such a construction as I have described the air would be driven thence through the pipe 5, back into the space between the two traps, and then escape through the sealed traps into the outer air?

Ans. The air in such case would be expelled from the vacuum chamber, then into the pipe 5 and air space 4, and be compressed in the latter to a degree dependent upon the proportions of the part, and if the capacity of the chamber 6 were sufficient to give sufficient compression to this air to expel the water from the traps 2 and 3, some of the air would escape through one or the other of those traps to the outer air; but, nevertheless, the air in the space 4 would still be considerably compressed, and so much so as, in my opinion, to render the closet practically inoperative when the flush commenced.

151 X Q. 211. The pressure under those circumstances would, in your opinion, be greater in the space between the traps than it would above the trap 2 in the bowl, would it not?

Ans. Yes—that is, it would be greater than the atmospheric pressure.

X Q. 212. Under those circumstances the air could escape through the water, could it not, and bubble up into the bowl through trap 2 and bubble up into the soil pipe through trap 3?

Ans. Before the air could escape from the air space 4 it would be necessary for the pressure to be sufficient to depress the water level in the legs of the respective traps with which this air space communicates until that level was depressed to the level of the dips of the respective traps or of one or the other of them, after which the air could escape beneath the dip of the trap and bubble up through the water in the other leg thereof.

X Q. 213. But you do not know that to be a fact from observation, do you?

Ans. No; I know it from my knowledge of the science of hydraulics.

X Q. 214. If any foul air or gases accumulate between the two traps in the closet constructed after the specification referred to and

in the manner shown in the drawings of the Peters & Donald patent, that air would have no access to the room in which the closet was situated, would it?

Ans. No; it would not, if constructed as shown in the drawings of said patent.

X Q. 215. In a closet constructed identically as shown in the figure to Peters & Donald patent sued on, where does the air driven from the vacuum chamber by the inflow of water from the reservoir tank go when the vacuum chamber is being filled from the reservoir tank?

Ans. That air, after backing up slightly in the pipe 5 and air space 4 until its pressure is sufficient to lift the valve 16, will escape through that valve and then through the vent pipe to wherever that pipe leads—presumably to the roof.

152 X Q. 216. This closet, then, is, from a sanitary standpoint, a perfect, or at least a very good, closet, is it not?

Ans. In most respects, yes.

X Q. 217. Would the flushing apparatus exhaust the air between the two traps sufficiently to start the siphon action of the closet in the desired manner—that is, in the manner described in the patent?

Ans. With the proper proportions it would. I suppose your question refers to the construction shown in the drawing of Peters & Donald. All the essential proportions are not given in that drawing, namely, the drawing does not show the cubical contents of the vacuum chamber 6.

X Q. 218. A mechanic constructing such a closet as this would be able to so construct it from that specification as to proportion it in a proper manner, would he not?

Ans. I should judge so; certainly.

X Q. 219. Will you please state how this closet operates in exhausting the air and causing the siphon action to start?

By Mr. BROWNE: Objected to by counsel for complainants as already fully answered in the direct examination.

Ans. Referring to the drawings of the Peters & Donald patent, when the operating lever 10 is pulled it lifts the valve, thereby closing the opening lettered *c*, and also, subsequently, lifting the valve 8. Thereupon the water in the vacuum chamber 6 runs down the flushing pipe 14 into the bowl 1; the running out of this water from the chamber 6 leaves a void above it which is filled by the sucking in of the air through the air pipe 5 from the confined air space 4, between the two traps 2 and 3. The partial vacuum thereby caused in this air space siphons over some water from the trap 2 and causes it to flow over and fall down through the trap 3, thereby starting the siphonic outflow from the bowl.

X Q. 220. How is the bowl refilled after the siphon action ceases?

153 Ans. The siphon action ceases when all of the water has run out from the chamber 6, after which, upon the release of the lever 10, the valves 8 and 11 drop back, so that the valve 12

uncovers the opening *c* and water runs from the reservoir tank 7 down the tube and out through the opening *c* into the chamber 6, thereby lowering the water level in the reservoir 7, and consequently dropping the float 12, and thereby opening the valve 13, whereupon water enters from the service pipe through this valve into the reservoir 7 and also into the small pipe 15. The water thus admitted to this pipe 15 flows through it to the flushing pipe 14, and then down that pipe to the bowl, which it refills, this action continuing until the level of water in the reservoir 7 has been restored to the normal, whereupon, by the lifting of the float 12, the valve 13 is closed and the flow ceases.

X Q. 221. The means for refilling the bowl thus specified are the same as those referred to in the Boyle reissued patent 10826 as being desirable where the flushing apparatus is constructed according to Fig. 6 of that patent, is it not?

Ans. They are the identical means referred to in the specification for refilling the bowl with the construction of tank shown in that figure.

X Q. 222. What are the essential features of the Peters & Donald patent, leaving out of view the means for refilling the bowl?

Ans. The indispensable features are the bowl, its outlet or soil passage, formed with two traps, the upper one of which serves to hold a quantity of water in the bowl and the lower one of which serves to form a confined air space between the two traps and some means for producing a partial vacuum in this confined air space for starting the siphonic action from the bowl; also, of course, a source of water for flushing the bowl.

X Q. 223. Which of the features shown in the drawings attached to the Peters & Donald patent are the ones which you consider essential and indispensable to the operation of that closet?

154 Ans. The bowl lettered 1, the two traps lettered 2 and 3, the intervening confined air space 4, the air pipe 5, the flushing or vacuum chamber 6, the flushing pipe 14, the source of water and suitable valves for controlling its flow.

X Q. 224. How many valves and how placed?

Ans. In my judgment no more valves are essential than will suffice to admit water to the vacuum chamber and control the outflow of water therefrom, which can be done with two valves, one an inlet valve and the other an outlet valve.

X Q. 225. Can it be done with less than two valves?

Ans. I cannot at present think of any method of doing it with less than two valves.

X Q. 226. In your judgment does defendant's tank and bowl marked "Complainants' Exhibit Defendant's Tank and Bowl" infringe either of the claims of the Peters & Donald's patents marked 260,232?

By Mr. BROWNE: Objected by counsel for complainants for calling for an opinion by the witness on a question of law.

Ans. As I should construe those claims, I judge that the defend-

ant's closet infringes the first three claims of the Peters & Donald patent.

X Q. 227. Will you please state how and in what manner it infringes those claims?

By Mr. BROWNE: I make the same objection as to the previous question.

Ans. I believe that defendant's closet infringes claim 1, because in use it necessarily involves all of the elements of the combination recited in that claim, viz., a bowl and fixed trap bend retaining water in the bowl, a second trap forming an air space, and an orifice communicating with said air space. I believe it to infringe claim 2, because when set up for operation it necessarily includes all the elements thereof, viz., a bowl and fixed trap bend containing water therein, a second trap forming an air space, and means for rarefying the air in said space. I believe that it infringes claim 3, because
155 when set up for use it necessarily includes all the elements recited therein, viz., a bowl, a trap leading therefrom, a second trap with an air space between the two, a flushing valve and means for operating that valve to flush the closet, and means for drawing air from the space between the traps, which is set in operation by the opening of the flushing valve. Of course, my opinion in this regard is dependent upon my correctly construing those claims. I do not claim to be a lawyer.

X Q. 228. Are any of the other claims of that patent infringed, in your opinion?

Same objection.

Ans. No; in my opinion they are not.

X Q. 229. The first claim specifies, among other elements, the second trap in the discharge passage leading from the first. Suppose the defendant used, in lieu of the second trap, a check-valve closing inward towards the upper trap and opening outward and which in its normal condition would be closed and in other respects when used also with the other elements referred to and mentioned in this claim 1 of the Peters & Donald patent, would such a construction, in your opinion, infringe that claim?

By Mr. BROWNE: Question objected to by counsel for the complainants as hypothetical and as calling for an opinion of the witness on a question of law.

Ans. That would depend entirely on the construction to be given the claim. If the check-valve referred to in the question can, in view of the previous state of the art, be considered a known equivalent for the lower trap, I should think that the construction described by counsel would infringe this claim, otherwise not.

X Q. 230. In the present state of the art do you, as a mechanical expert, consider that check-valve, such as I have described, to be a mechanical equivalent of the lower trap to such an extent as to cause a construction embracing it in lieu of the other trap, and in

combination with the other elements specified in claim 1, to infringe that claim?

By Mr. BROWNE: Objected to by counsel for complainants as calling for an opinion of witness on a question of law.

156 Ans. For some uses check-valves are equivalents for water seals or traps, and in the particular instance referred to such a valve would be partially an equivalent and partially not, in my judgment. It would be an equivalent in that it enabled, if closed tightly enough, a partial vacuum to be created just beyond the upper trap and thereby to siphon water therefrom. It would not be an equivalent in the sense of affording a free passage or outflow for the water after it ran over from the upper trap, as water in such case would have to force open the valve which would be held closed by the suction of the partial vaccum, and its action in escaping would consequently not be quite the same as if a water trap were employed.

(By Mr. TAYLOR:)

X Q. 231. Do you know what a mechanical equivalent is?

Ans. Yes; I believe I do.

X Q. 232. Well, what is it?

Ans. I understand a mechanical equivalent to be a part or element or combination which performs substantially the same function as the part or element or combination of which it is an equivalent and in substantially or approximately the same way so that the one can be substituted for the other without materially changing the result accomplished.

(By Mr. REX:)

X Q. 233. Could or could not a valve properly constructed be substituted for the lower trap of pneumatic closets and still leave the closet an operative construction?

Ans. I think it could.

X Q. 234. If it could would you consider in a pneumatic closet having a bowl with one trap and such a valve placed beneath that trap an infringement of claim 1?

By Mr. BROWNE: Objected to by counsel for complainants as calling for an opinion of the witness on a question of law.

Ans. That, in my judgment, would depend upon the construction that can be given to that claim in view of the state of the art at the time of the Peters & Donald invention. If the result or
157 effect produced in common by the two devices—the one shown in the patent and the one suggested by counsel—was new at that time I should think the claim would be broadly enough construed to include as an equivalent the combination described by the counsel. I assume that counsel meant to include also the orifice communicating with the confined air space.

X Q. 235. In these claims 2 and 3 to which we have referred the

words "substantially as set forth and for the purposes described" are used at the end of the second claim, and after describing the elements of the third claim it closes "substantially as set forth." Do you understand that to mean the elements specified or their equivalents?

(Same objection.)

Ans. I understand those words to refer back to the specification for a more detailed understanding or explanation of the claim.

X Q. 236. Referring back to the specification for the elements of the second claim, will you please state what they are, in your opinion?

Ans. That relates to claim 2, does it not?

X Q. 237. Claim 2.

Ans. The specification describes a bowl lettered 1 and trap 2 and air space lettered 4 and second trap lettered 3, and as a means for rarefying the air in said air space upon the flushing of the closet it describes a tank constructed with a closed apartment or flushing chamber lettered 6 and communicating at its top with the air space by a pipe lettered 5 and having an inlet valve, 11, to supply it with water and an outlet valve, 8, to discharge the water from it down a flushing pipe, 14, to the bowl.

X Q. 238. Referring to claim 3, please state what combination of elements is there described and claimed.

Ans. The specification describes a bowl or basin lettered 1 and trap, 2, leading therefrom and trap, 3, in the discharge passage, an air space, 4, between them, a flushing valve, 8, and means for operating that valve, consisting of the lever 10 and a rod
158 and chain, 9, connecting from the lever to the valve, and a means for drawing air from the space between the two traps, consisting of a flushing chamber, 6, with a pipe, 5, communicating from the top of said chamber to the air space 4, so that upon the opening of the valve 8 the outflow of water from the chamber (the descent of water from this chamber) creates a suction in the upper part of the chamber and is drawn from pipe 5 and space 4.

X Q. 239. You have stated that exhibits marked "Defendant's Tank" and "Defendant's Bowl," which you have examined, would, when set up as you think they should be in order to be operated as a water-closet, infringe claim 3 of the Peters & Donald patent. Will you please state what elements in the defendant's devices correspond to the elements which you have just mentioned as specified in claim 3 of the Peters & Donald patent.

Ans. Referring to my drawing, Exhibit 10, and to the drawing of the Peters & Donald patent, in my opinion the bowl of defendant's closet, lettered A in my drawing, answers to the bowl marked 1 in the Peters & Donald patent; the trap lettered B answers to the trap marked 2; the trap lettered C answers to the trap marked 3; the intervening air space E answers to the air space 4; the flushing valve I answers to the valve 8; the means for operating it to flush the closet consists in defendant's tank of the lever L, and in the Peters & Donald patent of the lever 10, both being connected to their re-

spective valves at their weighted arms. The means for drawing air through the air space consists in defendant's tank of the injector N and air pipe F, and in the Peters & Donald patent it consists of the vacuum chamber 6 and air pipe 5. In both the construction is such that they are set in operation by the act of opening the flushing valve.

X Q. 240. You mean that the elements shown in the drawing, Exhibit 10, and which you have mentioned as corresponding to the elements described in the specification of Peters & Donald and claimed in claim 3 thereof are the equivalents of the elements described in that claim?

159 Ans. Yes; in the sense of the claim.

X Q. 241. Were they all known to be such at the time Peters & Donald's original patent was obtained?

Ans. They were not known as such in that combination prior to the Peters & Donald invention, but the separate elements, each performing its own function, were, I believe, known to be equivalents to the extent of performing their separate functions.

X Q. 242. When—at the date of the patent?

Ans. My answer referred to the date of their invention.

X Q. 243. Suppose in lieu of the vacuum chamber claimed in claim 3 of the Peters & Donald patent sued on an ordinary air-pump piston was used to start the flushing action, would that be the equivalent in the combination of the vacuum chamber shown in the Peters & Donald patent?

By Mr. BROWNE: Objected to by counsel for complainants as calling for an opinion of the witness on a question of law.

Ans. An air pump properly connected would constitute a means for drawing air from the space between the two traps, and if it were constructed to be set in operation by the act of opening the flushing valve or simultaneously therewith it would, in my opinion, be the equivalent of either the vacuum chamber or the injector.

X Q. 244. You say constructed to be set in operation by the act of opening the flushing valve. Suppose it was constructed so that it could only be worked by hand and have no connection with the flushing valve, would that be an equivalent in that combination?

By Mr. BROWNE: Objected to as unfounded and hypothetical and as calling for an opinion of the witness upon a question of law.

Ans. My understanding of the essentials of this claim is that it is necessary that the means for exhausting the air shall operate practically simultaneously with the admission of flushing water, and if a pump were so connected with the flushing valve as to ac-

160 complish that result I should consider such a construction the equivalent of the construction shown in the Peters & Donald patent.

X Q. 245. Does what you have said concerning a device connected with defendant's tank, which you have called an injector, apply to the device shown in the reissued patent sued on, so far as its being

an equivalent of the vacuum chamber and connecting mechanism shown in the patent of Peters & Donald sued on?

Ans. Well, I have said a good many things about that injector in defendant's closet, and I hardly know what counsel refers to.

X Q. 246. There is an injector shown in the reissued patent sued on; is that an equivalent to the vacuum chamber shown in the Peters & Donald patent sued on?

Ans. That depends upon circumstances. If you mean in the sense of the claims of the Peters & Donald patent I believe it is.

X Q. 247. Are those injectors ever called "aspirators" when intended to be used to pump air or water by means of a passage of water through them?

Ans. They have variously been called aspirators, inspirators, ejectors, injectors, etc.

X Q. 248. Is the device which has been called a vacuum chamber, which is shown in the Peters & Donald patent sued on, an aspirator?

Ans. I think it might properly be so called.

X Q. 249. Both the aspirator shown in the Peters & Donald patents and the injector shown in the reissued patent sued on are air pumps, are they not?

Ans. They are air pumps in the sense that they are used to pump air, and if properly connected they might be employed or similar constructions might be employed to pump water. In both these water-closets they do, to a certain extent, act to pump water in that they draw some water over from the bowl into the confined air space.

X Q. 250. Then, as I understand you, Messrs. Peters &
161 Donald use a reservoir tank and air pump beneath it, intended to be operated by the falling of flushing water and to exhaust the air from the air space between two water traps, and that the defendants have simply substituted for the air pump which is shown in the Peters & Donald patent another form of air pump which was known at the time that the Peters & Donald patent was granted in the United States to be an equivalent thereof?

Ans. Yes; that is about as I understand it.

X Q. 251. In the Boyle patent sued on the air space between the two traps is in free communication with the air of the room in which the closet is placed, is it not?

Ans. To the extent of maintaining atmospheric pressure in this air space it is.

X Q. 252. What do you mean by the extent of maintaining atmospheric pressure in the air space?

Ans. I mean that the communication is such that while the closet is at rest, if a vacuum were to exist in the confined air space, it would be relieved by air entering that space from the room.

X Q. 253. Why would it enter that space from the room rather than any other part or any place else—why not from the pipe venting the air below?

Ans. No, sir; I did not say that it would—it would enter by the easiest course.

X Q. 254. You think the easiest course, then, would be through the pipe leading from the bowl up into the air bell?

Ans. Well, in any event there would be so little difference between the degree of ease with which it could enter by that path and that with which it could enter from the vent pipe that it would be impossible to state which way it would enter.

X Q. 255. It might enter at both places, might it not?

Ans. Yes.

X Q. 256. And air being forced out of the space between the tank it might find its exit out through the vent pipe and might find its exit out through the flushing pipe; is not that so? And probably would find its exit through both to some extent?

162 Ans. Other things being equal, I should think it would, but, in practice, if the vent pipe *f* is carried to the flue or to the roof there will usually be an up draught through it and from the bowl through the flushing pipe, so that it is improbable that any air or gases passing from the air space D would be able to flow down the flushing pipe against the up draught, and therefore I conclude that such gases would be drawn up the vent pipe *f*.

X Q. 257. Do you know that from practical experience and observation with reference to these closets?

Ans. No; I have never made any tests that would demonstrate this to be a positive fact. I am testifying from my general knowledge of the laws covering the movements of fluids.

X Q. 258. Is it not a fact that the foul gases which are generated in sewer pipes and water-closets and the foul odors which are generated therein have a tendency to flow in all directions when there is no pipe having a strong draught connected with the space containing them, and that some of these gases are heavier than ordinary air and have a tendency to settle down rather than flow upwards?

Ans. Such gases certainly have, like other gases, a tendency to disseminate themselves, but as to their specific gravity as compared with air I am unable to testify.

X Q. 259. As a matter of fact, however, in the sale of these closets, the closet shown and described in patent 255,485, granted to Mr. Boyle, is the one which is considered the most satisfactory from a sanitary point of view and which is supplied where the most expensive closets are sold as a general rule, is it not?

Ans. The "Tidal Wave No. 1" closet of Henry Huber & Co., which is a typical embodiment of the construction shown in patent 255,485, is a more expensive closet in its construction — those manufactured by them according to reissued patent No. 10826, and in my opinion is a little more perfect from a sanitary point of view than the latter class of closets, and I believe it is so consid-

163 ered generally by those persons competent to judge who have compared the two types of closets.

X Q. 260. Do you know how much the Peters & Donald closet costs to build?

Ans. No, sir.

X Q. 261. Do you know how much it will cost to build one of the

Boyle closets as is described in the Boyle patent 10826 sued on and shown in Fig. 1 of that patent?

Ans. No, sir.

X Q. 262. Do you know what the relative cost is?

Ans. No, sir.

X Q. 263. Do you know what the relative cost of the Peters & Donald closet as compared with any of the mechanisms described in the Boyle patents sued on is?

Ans. No, sir; I do not.

X Q. 264. You don't know which of them is the cheapest?

Ans. I know from my general knowledge of mechanical constructions which I think should be and which I think is the cheapest to manufacture.

X Q. 265. Do you know from purchasing them which would be the cheapest to you or from seeing them sold?

Ans. No; my only knowledge of their relative prices is derived from an examination of the priced catalogues of Henry Huber & Co. One of them is here in evidence, Exhibit No. 9.

Hearing adjourned to Monday, February 27th, 1888, at 9 a. m.

MONDAY, *February 27th*, 1888.

Appearances same as before.

Deposition of ARTHUR C. FRASER continued.

Cross-examination continued by Mr. REX:

X Q. 266. Does that catalogue show a water-closet constructed in exact accordance with the specifications and drawings of the Peters & Donald patent sued on?

164 Ans. No; not in every detail.

X Q. 267. Do you know from experiment and observation at what height above the bowl the flushing apparatus constructed in exact accordance with the specifications and drawings of the Peters & Donald patent sued on could operate best?

Ans. That would depend entirely——

X Q. 268. Please give me a yes or no answer.

Ans. I cannot give a yes or no answer to a double-barrelled question.

X Q. 269. Please read the question again and see if you cannot.

Question read to witness.

X Q. 270. Do you know from using or seeing used a closet constructed in exact accordance with the drawings and specifications of the Peters & Donald patent sued on at what height above the bowl the flushing apparatus could operate best? Please give me an answer yes or no to that.

Ans. No.

X Q. 271. In testifying in reference to the state of the art at the time Mr. Boyle conceived and produced the alleged improvements shown in his original patent No. 291,139, and of which a reissue is

sued on in this case, did you place the date of the invention before or after the application for the original patent?

Ans. Before, necessarily.

X Q. 272. Does not the vacuum chamber shown in the drawings of the Peters & Donald patent sued on operate as a measuring device by means of which the water used may be measured and the amount desired, and only that amount used?

Ans. Yes.

X Q. 237. I now hand you a blue sketch, which you will please examine and state if you know how a pump constructed according to that print could operate.

Ans. I think I understand the operation. The water running out from the reservoir R down through an injector, the nozzle of which appears to be roughly drawn with ink on this blue print,
165 would create a suction in the pipe A, and if this suction is sufficient it would draw water up from the lower level into the injector, and this water would be carried down through the pipe W with a stream of water descending from the reservoir R.

X Q. 274. Would it draw air out of the pipe marked A before it would draw water up to the pipe?

Ans. Yes; necessarily.

X Q. 275. Do you know what such pumps are called?

Ans. I think that such pumps have been called injector or ejector pumps.

X Q. 276. Were they known at the time that the Peters & Donald patent—the English patent—to which you have referred to in your testimony was obtained?

Ans. Of that I cannot be positive, but I believe they were.

X Q. 277. Do you know how old they are?

Ans. Not exactly.

X Q. 278. How far back can you place the knowledge of them, or how far back do you think they were used in this country?

Ans. I don't know of such a pump having ever been used in this country. My only knowledge of such pumps is seeing them described in philosophical works, and my recollection of reading such descriptions dates back several years, but I cannot tell from memory just how long.

X Q. 279. Were such pumps known in the art as long as five years ago—known in the art of manufacturing pumps?

Ans. I think they were known in descriptions in philosophical works longer than that.

X Q. 280. How long do you think before that?

Ans. I cannot state any time definitely from memory.

X Q. 281. Were they known as long as twenty years ago?

Ans. Very likely. I think I have seen descriptions of such pumps in books published even earlier than that.

166 The drawing referred to by the witness here offered in evidence by counsel for defendant and marked "Defendant's Exhibit 1."

X Q. 282. I now hand you another blue print, which you will

please examine and state how, in your opinion, an apparatus constructed in accordance with it would operate.

Ans. Water falling from the reservoir R into the sinuous tube W would create a suction in the air pipe A and draw air from the chamber or box apparently from which that air pipe leads.

X Q. 283. Would it create a vacuum?

A. If the box were air-tight it would—a partial vacuum.

X Q. 284. How long have such pumps as shown in this blue print been known, to the best of your knowledge, in the art of pump-making?

Ans. I am not aware that they have ever been known.

X Q. 285. If such a pump as is shown in this drawing were substituted for the injector shown in the drawing of the reissued patent sued on, would it operate as an injector as the one in that drawing operates?

Ans. No.

X Q. 286. In what respect would it differ in its operation from it?

Ans. There is no connection between the injector shown in this drawing and the air pipe or confined air space between the two traps shown in the reissued patent.

X Q. 287. Suppose the air pipe A shown in this drawing were connected with the same space between the two traps instead of the box, and the tube marked W was connected with the bowl of the water-closet, would it operate then as an injector as in the drawings of the reissued patent referred to operates?

Ans. It would then operate substantially as the injector shown in Fig. 6 of the reissued patent operates?

The drawing shown witness is here offered in evidence by counsel for defendant and marked "Defendant's Exhibit 2."

167 X Q. 288. How long have injectors constructed as in the drawing last referred to been known in this country?

Ans. I do not know.

X Q. 289. Have they been known as long as twenty years?

Ans. I do not know.

X Q. 290. Have they been known as long as ten years?

Ans. I do not know.

X Q. 291. Do you know anything about how long they have been known?

A. I do not.

X Q. 292. Do you know of any publication in which such a construction is shown and described?

Ans. Not directly; no; I have never examined any such publication.

X Q. 293. Do you know of any such publication indirectly?

Ans. I understand that a publication showing such construction as this was referred to in defendant's answer in this case, but I have not examined it.

X Q. 294. I now show you another blue print, which please ex-

amine and state how, in your opinion, it would operate, provided water were introduced through the tube W.

Ans. The water flowing down through this tube would escape at the tube leading from the bottom of the globe (bulb) or chamber, and if that chamber were filled with air it would draw some of the air out with it and create rarefaction in the chamber and in the pipe A connected to this chamber.

X Q. 295. Is not that injector precisely the same as the one shown in the drawing attached to the reissue sued on in this case and marked Fig. 6?

Ans. Except in matters of proportion; yes.

X Q. 296. How long have injectors such as the one known in that drawing been known in the art?

Ans. I do not know.

X Q. 297. Were they known as early as 1874?

Ans. I do not know.

168 X Q. 298. Were they known as early as 1880?

Ans. I do not know.

X Q. 299. Were they known when Mr. Boyle applied for his original patent on which the reissue is sued on in this case—known as early as March 12th, 1883?

Ans. As to this particular construction of injector I do not know, but will say that I believe such injectors had been known, as the injector principle was well understood, and numerous kinds and constructions of injectors had been suggested.

X Q. 300. Was the kind of injector shown in the drawing marked Fig. 6 and attached to the Boyle reissued patent sued on known at the time Mr. Boyle made his application, March 12, 1883?

Ans. I believe that substantially that construction of injector had been known.

X Q. 301. Had they been used for pumping by means of passing water through the nozzle of the injector?

Ans. I believe they had.

X Q. 302. The knowledge of such injectors was then old at the time Mr. Boyle made his alleged invention, shown and described in his original patent, of which the reissue is sued on, and were well known in the art of pump-making at the time he made his alleged invention, were they not?

Ans. Substantially similar injectors had been known.

The blue print last referred to is here offered in evidence by defendant's counsel and marked "Defendant's Exhibit 3."

X Q. 303. I now show you another blue print, which you will please examine. If the water shown in the reservoir tank in that drawing were admitted through the opening shown into the chamber beneath it and allowed to flow freely through it down into the pipe leading from the subchamber, would it not draw air from the pipe opening into the top of that chamber?

Ans. I think it would to some extent.

X Q. 304. Would you consider a closet constructed in accordance

with the principal shown in the Peters & Donald patent sued
169 on, except that this construction of the flushing apparatus were adopted instead of that shown in that drawing, substantially the same as the Peters & Donald closet shown in the drawing?

Ans. If the flushing apparatus shown in this blue print were substituted for the flushing apparatus shown in the Peters & Donold patent, the operation of exhausting the air would take place in the same general way and would be according to the same general principle introduced by the Peters & Donald invention, but in a more limited sense the operation would be different.

X Q. 305. Would the vacuum chamber, lettered V in the blue print just referred to, be the equivalent of the vacuum chamber shown in the drawing of the Peters & Donald patent?

Ans. It would in part and in part it would not. Shall I go on and explain?

X Q. 306. In what respect would it not?

Ans. In the sense that the Peters & Donald vacuum chamber is a measure for the water to prevent waste, and in the sense that it is first filled full of water and then acts to create the vacuum by the running out of water from the chamber and without any injector action, the construction shown in this blue print would not be its equivalent.

The blue print last referred to is here offered in evidence by defendant's counsel and marked "Defendant's Exhibit 4."

X Q. 307. Would what you have said concerning Defendant's Exhibit No. 4 apply equally to a construction such as is shown in a blue print which I now hand you?

Ans. The difference is only in degree, the construction shown in this last blue print bearing a little less resemblance to the Peters & Donald tank than that in the blue print, "Exhibit No. 4."

X Q. 308. Would a construction substantially as there shown operate in the same manner as one constructed in accordance with Exhibit No. 4?

Ans. Yes; the only difference would be one of degree.

170 X Q. 309. Would a closet in which the air is exhausted from between the two traps by means of an ordinary air pump worked by hand be a pneumatic closet?

Ans. It certainly would.

X Q. 310. If a check-valve were substituted for the lower trap and a hand pump were used to exhaust the air from between that check-valve and the upper trap it would remain a pneumatic closet, would it not?

Ans. Yes; to the extent that the lower check-valve made a space constituting the longer leg of the upper siphon a confined air space.

X Q. 311. You are familiar with the patent granted William Bunting November 19th, 1878, numbered 210,003, are you not?

Ans. I have examined it; yes.

X Q. 312. How long have you known of it?

Ans. A little over six years.

Defendant's counsel here offers in evidence the blue print referred to, which is marked "Defendant's Exhibit No. 5."

X Q. 313. You have stated that you are familiar with the patent granted William Bunting by the United States for improvements in water-closets, dated November 19th, 1878, and numbered 210,003. Would you consider a closet constructed in accordance with the specification and drawing of that patent an infringement upon either of the claims of the Peters & Donald patent sued on?

By Mr. BROWNE: Objected to by complainants' counsel as calling for the opinion of witness on a question of law.

Ans. I should consider it was if the check-valve lettered E in the drawing of that patent were to be considered in all respects an equivalent, in the sense of the Peters & Donald patent, for the lower trap or water seal, but, in my opinion, that check-valve is not properly an equivalent thereof, since while it performs one function of the water seal it does not perform all the functions thereof, or in other words it does not act in quite the same way. If
171 that valve could be made air-tight, which in practice would be very difficult to maintain (it would, in my opinion, be impossible to maintain it air-tight), it would be the equivalent of the lower trap in so far as the formation of the confined air space beneath the upper trap is concerned, so that the vacuum could be created to start the siphon of the upper trap, but in the Peters & Donald closet the lower trap has a different operation from the valve in addition to the mere creation of a confined air space, in that when a partial vacuum is formed the water in the upper limb of the lower trap will rise in proportion to the degree of rarefaction, and as the water from the upper trap pours over and falls into this leg a downfall occurs through the lower trap without admitting the passage of air through the soil pipe beneath, but, on the contrary, carrying air out from the air space and down to the soil pipe, so that the latter trap forms not only a compensating or balance water column yielding to the varying degree of vacuum, but also maintains the vacuum and increases it without obstructing the outflow. With the check-valve in Bunting's construction, however, assuming theoretically that the valve is air-tight, there will be no yielding or rise of water below upon the formation of the vacuum beyond the mere confinement of a little water which may run over from the upper trap and collect against the valve before the latter opens, and there is no seal or separation maintained between the confined air space and the sewer pipe after the siphon operation begins, since, as soon as the water flows over through the upper trap with sufficient volume or with sufficient force to break the partial vacuum which tends to hold the valve closed, this valve will be forced open and the water will immediately escape through it, and in throwing it open will admit at the same time the passage of air from the soil pipe up past the valve into the confined air space, thereby breaking the vacuum therein and stopping the pneumatic operation further than what is found in any of the old and non-pneumatic type of siphon closets. This operation

would not occur if the soil passage were of small diameter com-
172 pared with the volumn of outflow through it, but with the proportions shown in the drawings of Bunting's patent and imagining the parts enlarged to a practical scale—or, in other words, that the proportions practically answer to a full-sized closet of this construction—the operation would, I believe, be as I have stated. Bunting's air-exhausting device is a single-acting and single-stroke pump, so constructed that it cannot be effective beyond the duration of a single upward pull on the handle, so that whatever vacuum is to be created has to be created by that single pull, and cannot be maintained during the flushing of the closet, since the flushing does not commence until the pump reaches its extreme up stroke, at which time the flushing valve is opened. Thus there can be no strong outflow induced by the combined pulling action of a partial vacuum beneath the upper trap and the pushing action of the flushing water descending within the bowl, as with the Peters & Donald closet. In view of these distinctions I am of opinion that although Bunting's closet is a pneumatic closet, and in a broad sense operates on the same principle as Peters & Donald's, yet, as I should construe the claims in the Peters & Donald patent, I should not regard the Bunting construction as being an infringement thereof.

X Q. 314. You testify in this case as a professional expert, do you not?

Ans. Yes; if I understand your meaning correctly.

Cross-examination closed.

Redirect by Mr. BROWNE:

Redirect interrogatory 315. In your answer to cross-question number 250 what did you understand in that question to be meant by the word "equivalent" in connection given in the said question?

Ans. I understood the question to refer to what would be the equivalent of the element in question, namely, the "air pump," in the sense in which that element is specified in the Peters & Donald
173 patent as one of the elements of their invention. I understand that the word equivalent is used with a much broader meaning with reference to pioneer inventions than with reference to later or subsidiary improvements.

Examination of Arthur C. Fraser closed.

The witness states that on page 28 the matter in lines 12, 13, and 14 inclosed in pen mark should be left out, as it is simply part of an unfinished remark he commenced to make.

"Globe," in answer to Q. 294, should be "bulb."

ARTHUR C. FRASER.

Attest: BEN. L. FAIRCHILD,
Special Examiner.

Deposition of James E. Boyle.

Direct examination by ARTHUR S. BROWNE, of counsel for complainants:

JRMES E. BOYLE, being duly sworn, testified as follows:

Int. 316. What is your name, age, residence, and occupation?

Ans. James E. Boyle; occupation, plumber; am 54 years of age and reside in the city of Brooklyn.

Int. 317. What interest have you, if any, in reissued patent No. 10826 sued on in this suit?

Ans. It was issued to me; I own it.

Int. 318. At the time when you made your application for patent No. 291,139, of which the patent sued on herein is a reissue, what attorney did you employ?

Ans. Mr. Fraser.

Int. 319. Please state whether or not when you wished to apply for a patent you employed an attorney in all cases.

By Mr. TAYLOR: Objected to by counsel for defendant as leading and irrelevant.

Ans. Yes, sir; always.

Int. 320. What reliance, if any, do you place upon your attorney in the preparation of those papers?

174 By Mr. TAYLOR: Objected to by counsel for defendant as irrelevant and immaterial.

Ans. I leave it entirely to him—everything.

Int. 321. At the time you made your application for your orignal patent No. 291,139, what was the invention which you desired to have protected by the patent to be procured?

By Mr. TAYLOR: Objected to by counsel for defendant as irrelevant, incompetent, and immaterial.

His patent referred to and what he specified and claimed in his claims is the only competent evidence of the facts sought by the question.

Ans. The trombe or injector for rarefying the air between two water seals in a water-closet.

Int. 322. Please examine Fig 1 of patent No. 291,139 and state whether or not at the time you made your application for said patent a water-closet constructed in accordance with said figure had been made.

Ans. No; not to my knowledge.

Int. 323. Has a water-closet constructed in that manner ever been made?

By Mr. TAYLOR: Objected to as assuming a fact not known by the witness and cannot be known and as leading, irrelevant, and incompetent.

Ans. Yes; by me.

Int. 324. Are you familiar with the construction of water-closets, and particularly with the construction of water-closets made in accordance with Fig. 1 of this patent?

Ans. Yes, sir.

Int. 325. Please state whether or not, prior to making your application for patent No. 291,139, you had drawn or experimented with any water-closet or water-closet tanks operating upon the injector principle—that is, having a "trombe" or injector other than those shown in the drawings of your patent 291,139.

By Mr. TAYLOR: Objected to as leading, irrelevant, incompetent, and immaterial to any of the issues of this case.

175 Ans. Yes, sir.

Int. 326. Do you recollect the construction of the first experimental tank which you made having a "trombe" or injector?

(Same objection.)

Ans. Yes, sir.

Int. 327. Can you describe the same?

(Same objection.)

Ans. Yes, sir.

Int. 328. Please do so.

(Same objection.)

Ans. It has an air pipe or vacuum tube leading from the air space between the two water seals up and connecting with the flush pipe below the tank or cistern or service-box.

Int. 329. What was the construction of the tank, cistern, or service box that you have referred to?

(Same objection.)

Ans. A single cistern without a service box, an ordinary cistern valve in the bottom of it.

Int. 330. Please state whether or not, if you know, that identical tank and its connections are now in existence.

(Same objection.)

Ans. Yes, sir.

Int. 331. Where is this tank and its connections at the present time?

Ans. My impression is it is in Mr. Fraser's possession. It was sent to him. The tank and connections referred to have been introduced as exhibits in a case now pending between James E. Boyle, complainant, and Frank B. Hanson, defendant, in the circuit court of the United States for the southern district of New York, said case being a suit in equity brought under section 4918 of the Revised Statutes.

Int. 332. Please examine the tank and its connections shown in Fig. 1 of the drawing now shown you, and please state if you understand the same; and, if so, please state what said drawing shows.

Ans. It shows one of the first experimental tanks I made
177 By Mr. TAYLOR: Question and answer objected to as irrelevant and immaterial.

Int. 333. Why do you call it an experimental tank?

(Same objection.)

Ans. I used it for that purpose, experimenting with it.

Int. 334. Please state whether or not such a tank, with the connections shown, would be successful in practice for flushing a water-closet.

Objected — by defendant's counsel as leading, irrelevant, incompetent, and immaterial.

Ans. No; not of this character.

Int. 335. Why not?

(Same objection.)

Ans. There is no provision made for an after-wash—that is, a proper after-wash.

Fig 1 of the drawing referred to by the witness is hereby introduced in evidence and marked "Complainant's Exhibit No. 15, Boyle's Experimental Tank."

(Here follows diagram marked p. 176.)

By Mr. TAYLOR: The exhibit is objected to as irrelevant and immaterial.

Int. 336. Please state whether or not when you made your application for patent No. 291,139—that is, the original patent—you showed this experimental tank to Mr. Fraser.

By Mr. TAYLOR: Objected to as irrelevant, incompetent, and immaterial.

Ans. I do not remember. I do not think I did. I might have sketched it out on paper for him, however.

Int. 337. Please state what reasons you have, if any, for not having a similar construction shown in your drawings of the application for your original patent, No. 291,139, of which the patent sued on is a reissue.

By Mr. TAYLOR: Objected to as irrelevant, incompetent, and immaterial, as motives and reasons and inducements and other emotional operations of the witness' mind cannot affect the issues in this case.

178 Ans. I gave all that was called for; all that was asked; in fact, I left it entirely to Mr. Frazer. I thought at the time I had better show the tank complete, ready for New York market.

By Mr. TAYLOR: Answer objected to as irrelevant, incompetent, and immaterial.

FIG. 1.

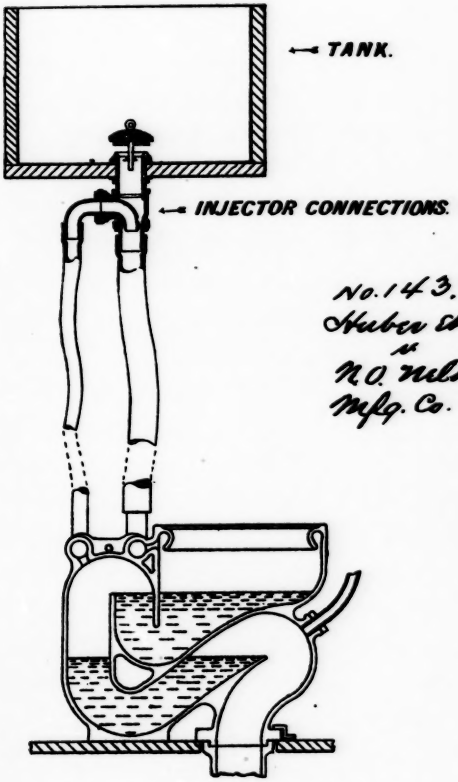

No. 143.
Huber et al.
v.
N.O. Nelson
Mfg. Co.
p. 176.

COMPLAINANTS' EXHIBIT. No. 15.

BOYLE'S EXPERIMENTAL TANK.

Int. 338. After your patent 291,139 was issued, please state the circumstances, if any, which led you to understand that said patent failed to cover what you supposed to be your invention.

By Mr. TAYLOR: Objected to as leading, suggestive, incompetent, and immaterial.

Ans. A patent issued to Frank B. Hanson, which I saw in the Patent Office Official Gazette, was the first that led me to suppose that I was not protected.

Int. 339. What did you do, if anything, after seeing the Hanson patent in the Official Gazette?

(Same objection.)

Ans. I came up to Mr. Frazer and called his attention to it and was advised at that time, I think, to have it reissued.

Int. 340. What connection, if any, has Mr. Huber with your reissued patent, No. 10826, now sued on?

By Mr. TAYLOR:

Int. 341. Is whatever agreement you have with Henry Huber touching this reissued patent sued upon in writing?

Ans. Yes, sir.

Int. 342. Has Henry Huber a copy of that writing?

Ans. I presume he has. He had at one time.

Int. 343. Have you a copy of that writing?

Ans. Yes, sir.

Counsel for defendant now objects to any oral evidence being adduced of the witness showing or tending to show the nature of that agreement between himself and Henry Huber, touching the license or other interests in the reissued letters patent sued upon, since the writing itself is the only competent evidence of the nature, character, extent, and scope of said agreement.

Direct examination closed.

179 Cross-examination by Mr. TAYLOR:

X Q. 345. Mr. Boyle, where were you born, in this or the old country?

By Mr. BROWNE: Objected to as incompetent, irrelevant, and immaterial.

Ans. I was born in South Boston, Massachusetts, in 1834, the 7th of February.

X Q. 346. Where were you educated?

(Same objection.)

Ans. Fall River, Massachusetts, and the State of New York.

X Q. 347. What schools?

(Same objection.)

Ans. Public schools.

X Q. 348. Can you read and write?

(Same objection.)

Ans. Yes, sir.

X Q. 349. I believe you pass as an intelligent man in this community, do you not?

(Same objection.)

Ans. In the water-closet line; yes, sir.

X Q. 350. You are thoroughly conversant with water-closets, are you not?

(Same objection.)

Ans. I think likely.

X Q. 351. And with all the terms used in connection with water-closets, are you not?

Ans. Yes, sir.

X Q. 352. Have you ever been the inventor or alleged inventor of anything for which letters patent were granted by the Patent Office of the United States?

Ans. Yes, sir.

X Q. 353. How many letters patent of the United States have been issued to you?

By Mr. BROWNE: Objected to as incompetent, irrelevant, and immaterial.

Ans. I cannot say exactly; it must be in the neighborhood of between thirty and forty.

X Q. 354. How many related to water-closets or water-closet apparatus?

180 (Same objection.)

Ans. I could not tell exactly; quite a number.

X Q. 355. Did nearly all of them relate to water-closets or water-closet apparatus?

(Same objection.)

Ans. I could not say without running over them.

X Q. 356. How many patents have been issued to you for alleged improvements on water-closets or water-closet tanks or attachments?

(Same objection.)

Ans. I could not tell without looking into it.

X Q. 357. As many as 20?

(Same objection.)

Ans. I could not say without going over the list.

X Q. 358. Prior to March 12, 1883, had you been the inventor of any improvements in water-closets or water-closet flushing apparatus?

Ans. Yes, sir.

X Q. 359. How many letters patent have you obtained or applied for prior to March 12, 1883, for improvements on water-closets?

(Same objection.)

Ans. Two or three, I think.

X Q. 360. Were you at a time prior to the last-named date a plumber?

Ans. Do you mean working at the trade?

X Q. 361. I mean a practical plumber.

Ans. Well, I claim to be a practical plumber.

X Q. 362. Were you such during the whole of the year 1883?

Ans. I was connected with the plumber's supply business.

X Q. 363. Did you learn the plumber's trade in your boyhood?

Ans. Yes, sir.

X Q. 364. How many years did you follow it as a mechanical plumber?

Ans. Up till April 3, '57, working at the bench; carrying on business up until the war broke out.

X Q. 365. You are now running a plumbing store, are you?

181 Ans. No, sir.

X Q. 366. What are you doing?

Ans. Well, I am not doing anything much except collecting royalties.

X Q. 367. Your chief business now is collecting royalties on patents, is it?

By Mr. BROWNE: Objected to as incompetent, irrelevant, and immaterial.

Ans. Yes, sir.

X Q. 368. How many patents do you own? As many as twenty-five or thirty?

(Same objection.)

Ans. My agreement with Mr. Huber will show the number being manufactured.

X Q. 369. Does the Huber agreement cover all the patents relating to plumbing, including those in suit?

(Same objection.)

Ans. No, sir.

X Q. 370. How, then, will the Huber agreement show all the patents that you have?

(Same objection.)

Ans. Some have expired, others were in use before I became acquainted with Mr. Huber—that is, water-closet attachments, water-closet valves, etc.

X Q. 371. Then I understand you that for more than seventeen years you have been the patentee of patents relating to water-closets and attachments?

(Same objection.)

Ans. Yes, sir.

X Q. 372. How many years since you first became the inventor of water-closets and attachments?

(Same objection.)

Ans. April, 1857, the first patent was issued to me.

X Q. 373. When was the next—about?

(Same objection.)

Ans. June 23, 1857.

X Q. 374. When next?

(Same objection.)

Ans. I cannot give you the date, but those two I never can forget.

X Q. 375. Well, you then have had a good deal of experience as an inventor, have you?

182 (Same objection.)

Ans. In connection with water-closets and the plumbing business, yes.

X Q. 376. Did you have much experience before the year 1883 in regard to inventions in plumbing and water-closets?

Ans. Yes, sir; I was a member of the New York Valve and Faucet Company in 1876, '77, and '78, I think.

X Q. 377. Did you have occasion to consult patents in regard to valves and plumbing works during the time you was a member of that firm?

Ans. I always made my models and submitted to my attorney, and, if patentable, had the papers drawn.

X Q. 378. Who was your attorney during those years?

By Mr. BROWNE: Objected to as incompetent, irrelevant, and immaterial.

Ans. George Stevenson, now dead.

X Q. 379. During those years did you have occasion to examine letters patent issued to others which had reference to plumbing work or attachments in order to learn the state of the art?

(Same objection.)

Ans. I always left that to my attorneys.

X Q. 380. Did you not study that at all yourself?

Ans. No, sir.

(Same objection.)

X Q. 381. Were you in Europe in 1881?

(Same objection.)

Ans. Yes, sir.

X Q. 382. Did you, while there, meet Stewart Peters and William Donald?

(Same objection.)

Ans. Yes, sir.

X Q. 383. Where?

(Same objection.)

Ans. City of Glasgow, Scotland.

X Q. 384. What was the object of your visit to Europe on that occasion?

(Same objection.)

183 Ans. To purchase or control a patent that had been issued to them and was on record here at the Astor library.

X Q. 385. Was the patent on record here at the Astor library—here in the city of New York?

(Same objection.)

Ans. Yes, sir; as I understood from Mr. Fraser.

X Q. 386. Who bore your expenses on that occasion?

(Same objection.)

Ans. Henry Huber.

X Q. 387. Were you in his employ when you went to Europe on that occasion?

(Same objection.)

Ans. No, sir; not exactly.

X Q. 388. Had you been in his employ before you went?

(Same objection.)

Ans. No, sir.

X Q. 389. Did you enter his employ when you returned?

(Same objection.)

Ans. Now, I do not know about answering this question. No, sir; I was in the employ of W. S. Carr & Co.

X Q. 390. Had Henry Huber a connection with that firm?

Ans. Yes, sir.

X Q. 391. What?

Ans. He was one of the company.

X Q. 392. Well, Henry Huber personally supplied you with means to go to Europe to purchase an interest in the Peters & Donald English patents?

By Mr. BROWNE: Objected to as incompetent, irrelevant, and immaterial, and for the further reason that it is not proper cross-examination, not being germane to the direct examination.

Ans. Yes, sir.

X Q. 393. The Peters & Donald patent about which I have interrogated you and about which you have answered you understand to mean patent No. 1207, dated April 7th, 1884, do you not?

184 (Same objection.)

Ans. I do not remember the date. Stewart Peters and William Donald are the men. I think the date is as you stated and the number.

X Q. 394. Was anything paid to Stewart Peters and William Donald by you for such an assignment as they made to you?

(Same objection.)

Ans. Yes, sir.

X Q. 395. How much?

By Mr. BROWNE: Witness is advised by counsel for complainants not to answer the question.

X Q. 396. How much?

Ans. I cannot answer it.

By Mr. BROWNE: The question is objected to as irrelevant, incompetent, and immaterial.

X Q. 397. Will you testify that anything was paid?

(Same objection.)

Ans. Yes, sir.

X Q. 398. State if it is not true that whatever was paid to Stewart Peters and William Donald was advanced by Henry Huber or Henry Huber & Co.

(Same objection.)

Ans. It was advanced by Henry Huber personally.

X Q. 399. Will you swear that it was not advanced by Henry Huber & Co.?

(Same objection.)

Ans. I swear I only knew Henry Huber in the matter. He furnished the money.

X Q. 400. Who wrote the specification for the American letters patent to which you obtained the signature of Stewart Peters and William Donald? Please state if you know.

(Same objection.)

Ans. Yes, sir; I got James C. Mewburn.

X Q. 401. Was he with you at Glasgow?

(Same objection.)

Ans. No, sir; he was in London.

X Q. 402. Did Peters & Donald go down to London?

185 (Same objection.)

Ans. No, sir.

X Q. 403. Did you have that specification prepared by James Mewburn before you went to Glasgow?

(Same objection.)

Ans. Yes, sir.

X Q. 404. Did you see that specification signed by Stewart Peters and William Donald?

(Same objection.)

Ans. Yes, sir; before the American consul or his deputy, on Queen street.

X Q. 405. What did you do with that specification after you got it; did you bring it back to this country with you?

(Same objection.)

Ans. I forget whether I mailed it or brought it back with me.

X Q. 406. Well, did you cause it to be filed in the Patent Office of the United States?

Ans. Yes, sir.

X Q. 407. State whether you got a written assignment to you from Peters & Donald or not on that occasion when you were in Scotland.

Ans. Those papers were drawn by Mr. Mewburn from instructions, I presume, from Mr. Fraser. They signed it before the American consul.

Counsel for defendant says that the assignment which he is asking the witness about is one which was introduced in evidence by the complainant, purporting to have been executed from Peters & Donald to James E. Boyle (Complainants' Exhibit 14).

Counsel for complainants says he so understands it.

X Q. 408. Now, on your return to America did you consult any patent solicitor about getting letters patent in America for the alleged invention described and covered by the specifications which you say you got Peters & Donald to execute before the American consul at Glasgow?

186 Ans. Before going away I did. I must have talked it considerable before going away.

X Q. 409. Who with?

Ans. With Mr. Fraser.

X Q. 410. Mr. Arthur C. Fraser, the expert, who testified in this case?

Ans. Yes, sir, and Mr. Huber.

X Q. 411. When you returned from Europe did you still continue to consult Mr. Fraser about obtaining letters patent with reference to what is called the Peters & Donald patent?

Ans. No; I assigned it to Mr. Huber before I got it, you know.

X Q. 412. Did you assign your right, title, and interest in the Peters & Donald invention that you acquired to Henry Huber?

Ans. Yes, sir.

X Q. 413. Did you do that as soon as you returned from Europe?

Ans. Yes, sir.

X Q. 414. After you made an assignment to Henry Huber did you consult Mr. Arthur C. Fraser concerning getting the letters patent in America, known as the Peters & Donald patent now sued on in this case?

Ans. No, sir; I do not think I did.

Objected to as incompetent, irrelevant, and immaterial.

X Q. 415. Did you pay Mr. Fraser anything for soliciting said patent—I mean, of course, the Peters & Donald patent sued on?

(Same objection.)

Ans. Mr. Huber could answer that question.

X Q. 416. The question is, did you?

(Same objection.)

Ans. I don't know, sir.

X Q. 417. Whatever, then, was paid to Mr. Fraser as solicitor touching the Peters & Donald patent was paid by Henry Huber and not by you?

(Same objection.)

Ans. Yes, sir.

187 X Q. 418. Will you swear it was not paid by the firm of Henry Huber & Co. and not Henry Huber personally?

(Same objection.)

Ans. Yes, sir.

X Q. 419. You will swear that?

(Same objection.)

Ans. There was no such firm at that time.

X Q. 420. Have you any interest in the Peters & Donald patent sued on in this case?

Ans. I assigned all my interest to Henry Huber.

X Q. 421. Then you have no interest at all?

Ans. No; I have no interest whatever.

X Q. 422. Are you interested in the result of this suit in any way?

Ans. Yes, sir.

X Q. 423. Are you bearing part of the expenses of this suit?

By Mr. BROWNE: Objected to as incompetent, irrelevant, and immaterial.

Ans. Yes, sir.

X Q. 424. Are you to reap any of the profits growing out of this suit if you should win?

(Same objection.)

Ans. Yes, sir.

X Q. 425. Did you employ Mr. Fraser to testify as an expert in this case?

(Same objection.)

Ans. I don't remember of employing anybody.

X Q. 426. Who asked Mr. Fraser to testify as an expert in this case?

(Same objection.)

Ans. Mr. Huber, probably.

X Q. 427. Didn't you?

(Same objection.)

Ans. No, sir.

X Q. 428. Don't you bear any of his expenses?

(Same objection.)

Ans. Yes, sir.

X Q. 429. What part do you bear?

(Same objection.)

Ans. One-half.

188 X Q. 429½. What did you do with the papers which you got executed by Stewart Peters and William Donald while in Glasgow, Scotland, in 1881?

Objected to as incompetent, irrelevant, immaterial, and not proper cross-examination.

Did you file them or cause them to be filed in the Patent Office of the United States of America?

Ans. My impression is that I brought them home with me and delivered them to Henry Huber.

X Q. 430. And after that you ceased to have any connection or anything to do with the soliciting of the American patent known as the Peters & Donald patent sued on in this case. Is that so?

Ans. Yes, sir.

X Q. 431. And you have had nothing to do with it since to this day, have you?

Ans. No, sir.

X Q. 432. How long after letters patent 291,139 were issued was it before you received them in your possession?

Ans. I suppose I got it on the day they received it at the store of Henry Huber & Co.

X Q. 433. So you must have received letters patent 291,139, the original of the reissue which is sued on, as early as the 4th or 5th of January, 1884?

Ans. About as early as I would receive a letter addressed to me; addressed to their store from Washington.

X Q. 434. Well, that would be about the 4th or 5th of January, 1884, wouldn't it, if it was issued on the 1st?

Ans. Yes; about the 4th; I couldn't tell exactly.

X Q. 435. Well, about that?

Ans. Yes, sir.

X Q. 436. Now, what did you do with the original letters patent 291,139 after you received it?

Ans. I left them in the safe of Henry Huber & Co.

X Q. 437. You put it in the safe of Henry Huber & Co.?

Ans. I left it there and they put it in the safe, I presume.

189 X Q. 438. Why did you put it in their safe?

Ans. I don't know. I left it there.

X Q. 439. Why did you leave it with Henry Huber & Co.?

Ans. I thought they had a better place to keep it than I had.

X Q. 440. You are there at the store every day?

Ans. Nearly every day.

X Q. 441. Have you free access to the patents that have been issued to you?

Ans. No, sir.

X Q. 442. Can't you see them when you want to?

Ans. By asking for them.

X Q. 443. Where was this patent, 291,139, delivered to you—at your home, in Brooklyn, or in New York city?

Ans. It was delivered at 85 Beekman street, New York.

X Q. 444. Is it there where you get your mail?

Ans. Yes, sir; then.

X Q. 445. Had you any connection with the business in which Henry Huber was engaged?

Ans. No, sir.

X Q. 446. Simply collecting your royalty?

Ans. Yes, sir.

X Q. 447. But otherwise a gentleman of leisure in those days, were you?

Ans. Well, yes.

X Q. 448. You spend a great deal of your time in study and investigation, do you not?

Ans. No, sir.

X Q. 449. Do you open your own mail?

(Objected to as incompetent, irrelevant, and immaterial.)

Ans. Yes, sir.

X Q. 450. Were you in 1884 in the habit of opening your own mail?

(Same objection.)

Ans. I opened it myself.

X Q. 451. Did it yourself?

(Same objection.)

190 Ans. Yes, sir.

X Q. 452. You generally know what you get in your mail, do you?

(Same objection.)

Ans. I do.

X Q. 453. Your education entirely qualifies you to read a letters patent, whether written or not?

Ans. I can read the specification.

X Q. 454. You haven't any trouble in doing so, do you?

Ans. If connected with my trade I do not.

X Q. 455. Well, you could do so in 1884, couldn't you, and have done so?

Ans. Yes, sir.

X Q. 456. You were regarded as a very intelligent man in regard to water-closets and their connections as early as 1880, weren't you?

Ans. I used to be considered a pretty good workman.

X Q. 457. Weren't you so regarded, so far as knowledge is concerned about water-closets and their connections, flushing apparatus, valves, etc., for the last ten or twelve years?

Ans. I am pretty well posted in water-closets and in the plumbing business generally; been at it since 1848.

X Q. 458. There is no part or connection of a water-closet or a tank or a flushing apparatus or a valve but what you pretty well understand, is there?

Ans. Yes; after looking it over carefully.

X Q. 459. Mr. Boyle, I now call your attention to Fig. 1, identified by you in your direct examination and made an exhibit, designated as Complainants' Exhibit Boyle Experimental Tank, and will ask you whether you will swear positively that you presented a sketch of such a tank to Mr. Fraser, your patent solicitor, prior to March 12th, 1883.

Ans. I couldn't say positively.

X Q. 460. Is it not true that the only sketch you presented to Mr. Fraser at all was one similar to that shown in Fig. 5 of letters patent 291,139, the original of the reissue sued on in this case?

191 Ans. No; I exhibited to him Figs. 1, 4, and 5, as shown by said patent 291,139.

X Q. 461. Now, it is true, then, is it, that the only figures that you exhibited to Mr. Fraser, your patent solicitor, at and before you made your application for letters patent 291,139, are such as are shown in Fig. 1, Fig. 4, and Fig. 5 of said patent?

Ans. I think so.

X Q. 462. That is your best recollection, is it?

Ans. Yes; I might have shown some other sketch.

X Q. 463. You have no recollection of it, have you?

Ans. I don't recollect it.

X Q. 464. Is it not true that Fig. 2, Fig. 3, and Fig. 6 of the patent 291,139 were sketched by Mr. Fraser personally?

Ans. Yes, sir.

X Q. 465. Fig. 2 was made by Mr. Fraser in order to manifest the operation of the flushing apparatus with the value open, was it not?

Ans. Yes, sir.

X Q. 466. And he so said to you, didn't he?

Ans. Yes, with my permission.

X Q. 467. He thought that that would make it easier to be understood, didn't he.

Ans. Yes, sir.

X Q. 468. And Fig. No. 3 was also sketched by Mr. Fraser in

order to show the direction of the current of air when water is flowing down the flushing pipe from the flushing chamber, was it not?

Ans. Yes, sir.

X Q. 469. That was the object of that figure, to illustrate that?

Ans. Yes, sir.

X Q. 470. Who sketched Fig. 6 in said patent 291,139; did Mr. Fraser?

Ans. I suppose Mr. Fraser did.

X Q. 471. You didn't, did you?

Ans. No, sir.

X Q. 472. Does Fig. 6 show a reservoir tank, E?

Ans. Yes, sir.

X Q. 473. Does it show a flushing chamber, F?

192 Ans. Yes, sir.

X Q. 474. Does it show a pipe whereby the air may escape from the flushing chamber to the outer air?

Ans. It does, imperfectly.

X Q. 475. It is designed to show that?

Ans. Yes, sir.

X Q. 476. Still calling your attention to Fig. 6 of said patent 291,139, I ask you who suggested the ball valve G.

Ans. I certainly didn't; I wouldn't be so foolish.

X Q. 477. Is it not true that you personally suggested the fitting in of the ball valve G to keep the water from backing up and running down the air pipe?

Ans. No, sir.

X Q. 478. You didn't do that?

Ans. I don't think I did.

X Q. 479. Will you swear that you did not?

Ans. I couldn't swear I didn't; I couldn't say positively.

X Q. 480. In your judgment would a closet constructed as indicated by Fig. 6, with the ball value G, be operative?

Objected to as calling for expert testimony on the part of the witness, the witness not having been called as an expert, and the question seeking to make the witness an expert on behalf of defendant, and notice is hereby given that if this line of cross-examination is persisted in counsel for complainants will cross-examine the witness as if called as defendant's own witness.

Would a construction with that valve G be operative?

Ans. No, sir.

X Q. 481. Why was that valve put there, as shown in this figure?

Ans. I don't know, unless it was to keep the water from going down.

X Q. 482. But it would also keep the air from passing down the air pipe E, so as to prevent the breaking of the vacuum, wouldn't it?

193 (Same objection.)

Ans. Yes, sir.

X Q. 483. And hence would be absolutely inoperative?

Ans. Yes, sir.

X Q. 484. The flushing apparatus shown in Figs. 1, 4, and 5 of patent 291,139 each show the tank E and flushing chamber F, do they not?

Ans. Yes, sir.

X Q. 485. Did you submit to Mr. Fraser a complete water-closet embodying your invention before making your application for letters patent 291,139?

Ans. We had a closet in operation, but whether I submitted it to him or not I don't know.

X Q. 486. Did you not send it to his office?

Ans. I think I did. He had the drawings first, however.

X Q. 487. You sent it to his office, did you not?

Ans. I don't remember.

X Q. 488. If you sent one to his office, was it not constructed as shown in Fig. 1 of said patent 291,139?

Ans. Yes, sir.

X Q. 489. In all respects?

Ans. Except in some little details; the valve, for instance.

X Q. 490. Substantially the same?

Ans. Yes, sir.

X Q. 491. That is to say, it contained a reservoir, E, a flushing chamber, F, and an air bell, as shown in said Fig. 1, among its parts, did it not?

Ans. Yes, sir.

X Q. 492. It also contained a bowl, with a soil pipe or passage leading therefrom, which, with its connections, contained two traps with an air space between the traps, did it not?

Ans. Yes; it contained a water-closet bowl trapped with a trap directly under the bowl, which led to the soil pipe, with an air space between the trap and the water seal in the bowl.

X Q. 493. And it also contained an air pipe leading from the air space mentioned in your last answer up into the air bell, did it not?

194 Ans. Yes, sir.

X Q. 494. And it also contained a flushing pipe, leading from the flushing chamber down to the bowl to flush the bowl, did it not?

Ans. Yes, sir.

X Q. 495. And it also contained an injector leading from the air pipe to the flushing pipe at right angles, did it not?

Ans. Not from the air pipe; no, sir; it has got a water way leading up to the top of the air bell.

X Q. 396. Now, Mr. Boyle, the water-closet you sent to Mr. Fraser as your solicitor and embodying your invention had such an air bell with such water ways as is shown in Fig. 1?

Ans. Yes, sir.

X Q. 497. And in practical use when water is permitted to run into the flushing chamber F it will ascend by pipe *t* to the level of the water in that tank, and part of it will run over into the inner

pipe and thence down, running out through the injector, which is sucking the air out of the air bell?

Ans. Yes, sir.

X Q. 498. That was the plan, was it?

Ans. Yes, sir.

X Q. 499. And that was the water-closet that you sent to Mr. Fraser embodying your invention?

Ans. Yes, sir.

X Q. 500. Did you tell him that the valve to the tank E ought to be several times larger than the valve or outlet opening *i* of the flushing chamber?

Ans. I certainly told him that; my sketches showed that.

X Q. 501. Was that necessary for the operation of it, as you understood it?

Ans. No, sir.

X Q. 502. Did you tell him it was?

Ans. No, sir.

X Q. 503. You did not say anything about that to him—about the size of those openings?

Ans. I cannot say; it was made as my drawings showed.

195 X Q. 504. Did you tell him so?

Ans. Certainly I did; I gave him drawings, sizes, and everything else.

X Q. 505. Now, Mr. Boyle, are you in the habit of signing specifications without reading them?

Ans. No; I read them or have them read to me.

X Q. 506. Did you read the specification of patent 291,139 before you signed it?

Ans. I think I did, or else they were read to me.

X Q. 507. One or the other?

Ans. Yes, sir.

X Q. 508. You are sufficiently intelligent to understand the nature of them, aren't you, when they are read to you?

Ans. Yes; when it describes the operation of a water-closet.

X Q. 509. You understood them on that occasion as you read them, didn't you?

Ans. Yes, sir; I understood them.

X Q. 510. Mr. Boyle, you are aware now, and have been for several years, that the great majority of all claims of patents are issued for combination claims, are you not?

Ans. No; I can't say that I am.

X Q. 511. You do not know whether they are or not—you have not investigated patents enough?

Ans. No; I have not investigated patents, except in my own business.

X Q. 512. Well, as far as your business is concerned, the great majority of patents issued are for combination claims?

Ans. Well, yes.

X Q. 513. How long have you known of that fact?

Ans. Since I got into this trouble.

X Q. 514. Did you not know that fact when you first made application for letters patent?

Ans. No, sir.

X Q. 515. Can you produce here a patent out of your forty where you got any claims allowed other than combination claims?

Ans. I don't know whether I can or not.

196 X Q. 516. You don't know.

Ans. No.

X Q. 517. How long, to your knowledge, have injectors been used in the arts, in pump-making, air pumps or water pumps?

Objected to by counsel for complainants as endeavoring to make the witness defendant's own expert, and notice is given that complainants' counsel will cross-examine the witness as if defendant's own in case such cross-examination is continued.

Counsel for defendant disclaims making witness his own and asserts that it is legitimate cross-examination.

Ans. I couldn't answer that question.

X Q. 518. Ever since you have been a man?

Ans. Yes, sir.

(Same objection.)

X Q. 519. You knew that injectors were old, did you not?

Ans. Yes, sir.

X Q. 520. You knew there were various forms of injectors, all manners of them?

Ans. The trombe was the one that struck me.

X Q. 521. You knew that there were all kinds and forms of them?

Ans. Never looked into them; I heard there were injectors.

X Q. 522. Any method by which air could be exhausted in the air space between the two traps would have the effect of producing siphoning of water, would it not, when the water is running down the flushing pipe?

(Same objection by counsel for complainants.)

Ans. Yes, sir.

X Q. 523. A mere pump operated by the hands and attached for the purpose of exhausting the air between the two traps of the bowl would produce siphoning if water was permitted to go down the flushing pipe into the bowl, wouldn't it?

(Same objection.)

197 Ans. It would do it whether the water came down from the tank or not if the bowl and trap were full.

X Q. 523. And would a water-closet, with the two traps in the soil passage leading to the bowl, if operated by such an air pump to exhaust the air in the air space, be a pneumatic water-closet?

(Same objection.)

Ans. Yes; it would be a vacuum closet.

X Q. 525. It would also be a pneumatic water-closet, wouldn't it?

(Same objection.)

Ans. Yes; to exhaust the air.

X Q. 525½. I now call your attention to Fig. 1, introduced in evidence this morning, and which, for short, I will call Boyle's experimental tank, and will ask you why you did not send a tank constructed like that to Mr. Fraser's office when he was making applications for letters patent 291,139.

Ans. Because I decided not to use the injector in that shape.

X Q. 526. That was one of the experiments that you swore you made?

Ans. Yes, sir.

X Q. 527. Having experimented with it, you abandoned that for what you thought a better method—that is, you have sworn that you have constructed a water-closet as shown in said figure—Boyle's experimental tank?

Ans. Yes, sir; this is the same tank.

X Q. 528. Now, what I am asking you is, the tank you sent to Mr. Fraser's office you regarded a better one, did you?

Ans. Yes, sir; for the New York market.

X Q. 529. This matter, then, shown in Fig. 1 was a mere experiment of yours, was it?

Ans. Yes, sir; that was all.

X Q. 530. It was not satisfactory to you, was it?

Ans. No, sir.

X Q. 531. You then abandoned that to make as is shown in Figs. 1, 4, and 5 of letters patent 291,139?

198 Mr. Browne here made some remarks to witness, and counsel for defendant thereupon objects to counsel for complainants interfering with cross-examination.

By Mr. Browne: Counsel for complainants objects to the question as indefinite and misleading.

Ans. Abandoned it? No; I didn't abandon it. My reason for making it as I make it now is because I could make it in one piece.

X Q. 532. Did you not, in answer to my question before, say yes, in answer to my question before counsel interfered?

Ans. Yes; but I didn't understand.

X Q. 533. What do you mean by not understanding?

Ans. Abandoned it.

X Q. 534. Did you ever do anything more than make an experimental tank, as shown in Fig. 1, Boyle's experimental tank?

Ans. Yes, sir.

X Q. 535. More than one?

Ans. Yes.

X Q. 536. When?

Ans. Some time.

X Q. 537. Have you got them?

Ans. No; I only made them to see the best way of making that trombe.

X Q. 538. You never put any on the market?

Ans. No.

X Q. 539. A mere experiment?

Ans. That is all.

X Q. 540. Then, after experimenting that way, you then made one according to Figs. 1, 4, and 5 of patent 291,139 as perfecting your invention, did you?

Ans. Yes; for the New York market.

X Q. 541. What do you mean by "for the New York market"?

Ans. We were compelled to use tanks in this State by the health board.

X Q. 542. Do not all pneumatic closets have tanks?

Ans. Not before I made mine.

X Q. 543. Did not the Peters & Donald patents have a tank?

199 Ans. I had not seen that and that was not in New York.

X Q. 544. Will you swear that the Peters & Donald patent was not in New York before March 12th, 1883, when you applied for your letters patent?

Ans. I cannot.

X Q. 545. Will you swear that you had not seen the Peters & Donald patent before March 12th, 1883?

Ans. Oh, yes.

X Q. 546. Didn't the Peters & Donald patent use a pneumatic closet or tank and sealed flushing chamber?

Ans. Yes; and all other closets in England and Scotland used tanks.

X Q. 547. So the idea of a tank at the time you applied for letters patent 291,139 was not new to you, was it?

Ans. No, sir; they used them when I first went to my trade in New York.

X Q. 548. Did you ever see a pneumatic closet operated without a tank anywhere?

Ans. No, sir.

X Q. 549. You have said, have you not, that you never constructed a tank such as is shown in Fig. No. 1, Boyle's experimental tank, for the market?

Ans. No, sir.

X Q. 550. The one which you say you constructed is simply an experiment, you said, did you not?

Ans. Yes, sir.

X Q. 556. It began and ended in experiment, did it not, so far as that tank was concerned?

Ans. Yes, sir.

X Q. 557. You never pursued that tank further than the experiment, but turned aside to make tanks and flushing apparatus such as shown in Figs. 1, 4, and 5 of letters patent 291,139, did you not?

Ans. No, sir; I never did.

X Q. 558. You regarded, then, the construction of the flushing

apparatus such as is shown in Fig. 1, Boyle's experimental tank, simply and merely as an experiment, did you not?

Ans. Yes, sir.

200 X Q. 559. And after having experimented with it awhile you quit it and turned to other forms and made such a flushing apparatus as is shown in letters patent 291,139, in Figs. 1, 4, and 5, did you not?

Ans. Yes, sir.

X Q. 560. And it was that flushing apparatus such — is shown in Figs. 1, 4, and 5 of letters patent 291,139 that you perfected, for which invention you applied for letters patent 291,139, was it not?

Ans. Yes, sir.

X Q. 561. How many years ago will you swear it was when you say you constructed a water-closet such as is shown in Fig. 1, Boyle's experimental tank?

Ans. It was just before I went to Europe.

X Q. 562. How long before you went to Europe?

Ans. It must have been just before I went; a week or two, probably.

X Q. 563. What time did you go to Europe?

Ans. I went to Europe in October, 1881—12th of October.

X Q. 564. Did you ever experiment with tanks such as is shown in Fig. 1, Boyle's experimental tank, after you returned from Europe, or did you proceed to other experiments which resulted in such flushing apparatus as is manifested in Figs. 1, 4, and 5 of patent 291,139?

Ans. I made several experiments before I came back.

X Q. 565. And did those experiments result in the production of such flushing apparatus as is shown and manifested in Figs. 1, 4, and 5 of said patent 291,139?

Ans. Yes.

X Q. 566. If I understand you, then, correctly, Mr. Boyle, you have no recollection of doing anything further with your construction which you say you made as shown in Fig. 1, Boyle's experimental tank, after you returned from Europe—that is, whatever you did in experimenting with that kind of a structure was prior to your going to Europe so far as you recollect?

Ans. Yes, sir.

X Q. 567. And you are sure that the experiments occurred prior to your going to Europe?

201 Ans. I am not sure; I am not positive about it.

X Q. 568. But according to your best recollection that is it, is it not?

Ans. My recollection is that I made that particular one before I went and the others I made after I came back.

X Q. 569. Now, Mr. Boyle, when did you first learn that Frank B. Hanson had been granted letters patent 308,358, dated November 25th, 1884?

Ans. I saw it in the Official Gazette.

X Q. 570. Where?

Ans. At the store of Henry Huber & Co., 85 Beekman street.

X Q. 571. Who called your attention to it, if anybody?

Ans. I generally pick it up once a week and look it through to see if there is anything in connection with water-closets; I discovered it myself.

X Q. 572. Do you mean to say that is the first you knew that Hanson had applied for letters patent on water-closets?

By Mr. BROWNE: Objected to as incompetent, immaterial, and irrelevant.

Ans. No, sir.

X Q. 573. How did you learn it?

(Same objection.)

Ans. From Hanson's father.

X Q. 574. When and where did you learn that fact from his father?

Ans. Down at the corner of Beekman and Pearl street.

X Q. 575. When?

Ans. I could not tell you exactly when, but it was before that patent issued.

X Q. 576. Did the father inform you that Frank B. Hanson had applied for letters patent for a pneumatic water-closet where the injector was used and only one tank?

Ans. No, sir.

X Q. 577. Did he inform you of the nature and character of the invention?

202 Ans. No, sir; except that it was similar to mine.

X Q. 578. Similar to yours? Did he say in what respect?

Ans. No, sir.

X Q. 579. Then when the patent was granted to Frank B. Hanson, in the fall of 1884, you say you saw it in the Official Gazette?

Ans. Yes, sir.

X Q. 580. Did you see it in the same week the patent was issued or within a very few days after?

Ans. Same week.

X Q. 581. When you saw it you say you then went to Mr. Fraser, your patent solicitor's office?

Ans. Yes, sir.

X Q. 582. You say he advised you to apply for a reissue of your letters patent?

Ans. I think so; I won't be sure.

X Q. 583. Did he tell you that your letters patent 291,139 was not broad enough to cover the same invention described in the Hanson patent, 308,358?

Ans. I do not remember what he told me.

X Q. 584. But did he tell you to get a reissue of your letters patent?

Ans. Yes, sir.

X Q. 585. Did he tell you to get a reissue of your letters patent if you could get it because it would affect the Hanson patent?

Ans. How is that again?

X Q. 586. Did he tell you that to get a reissue—you and he talked over that—did he tell you that if you got a reissue of your letters patent it would affect the Hanson patent in any way?

Ans. Yes, sir.

X Q. 587. What effect did he tell you it would have—destroy it?

Ans. Yes, sir.

X Q. 588. And he advised you to take that course?

Ans. Yes, sir.

X Q. 589. And you employed him to do it?

Ans. Henry Huber did.

X Q. 590. And he was Henry Huber's attorney at that time?

203 Ans. Yes, sir.

X Q. 591. And is now?

Ans. I believe so.

X Q. 592. The idea had not dawned across your mind to get a reissue of letters patent 291,139 until you saw the Hanson patent, did it?

Ans. No, sir.

X Q. 593. You applied for the reissue to destroy the Hanson patent, did you not?

Ans. I applied to obtain my rights.

X Q. 594. Did you not apply for the reissue in order to affect the Hanson patent?

Ans. Yes, sir; I wanted to get my rights.

X Q. 595. You applied to affect the Hanson patent, did you not?

Ans. Yes, sir; to get my rights.

X Q. 596. Did you ever talk about your rights or any rights at all until you saw Hanson's patent?

Ans. Never.

X Q. 597. And when you saw the Hanson patent you thought fit to consult with Mr. Fraser?

Ans. Yes, sir.

X Q. 589. And he told you to apply for a reissue?

Ans. I think so.

X Q. 599. And he told you that when you got a reissue it would destroy the Hanson patent?

Ans. I think he said that I would have to.

X Q. 600. And you brought this proceeding to get a reissue on that device, did you?

Ans. Yes, sir.

X Q. 601. Who paid the expense of getting that reissue—you or Henry Huber & Co.?

By Mr. BROWNE: Objected to as incompetent, irrelevant, and immaterial.

Ans. Henry Huber, I think; I won't be positive about that.

X Q. 602. That is your best impression, is it?

Ans. That is my best impression.

X Q. 603. How many experimental tanks identically like that shown in Fig. 1 of Boyle's experimental tank did you make as experiments?

204 Ans. Three or four, I think.

X Q. 604. Have you got them now?

Ans. I think so.

X Q. 605. Where are they?

Ans. Somewhere around the factory and the store—maybe at the store.

X Q. 606. Now, you made these before you went to Europe, according to your best impression?

Ans. I don't remember; I don't think I made them all before I went.

X Q. 607. Will you swear you made any of them after you got back?

Ans. I think I did.

X Q. 608. When?

Ans. Right after I got back.

X Q. 609. In the fall of 1881?

Ans. Yes, sir.

X Q. 610. Mr. Boyle, when did you first see a completed water-closet constructed such as is shown in Fig. 1 of letters patent 291,139?

Ans. In December, 1882, I think; the latter part of 1882; I won't be certain about it; Henry Huber & Co.'s books will decide that; that is, ready for the market.

X Q. 611. Did you, as early as the spring of 1881, see such closets constructed?

Ans. No, sir.

X Q. 612. Will you swear that no such closets were constructed in New York, to your knowledge, prior to your return from Europe, such as is shown in Fig. 1 or such as is shown in the Peters & Donald patent sued on in this case?

By Mr. BROWNE: Objected to as confusing.

Ans. I don't understand the question.

X Q. 613. Will you swear that you saw no water-closets constructed or on the market, prior to the fall of 1881, such as is shown in Fig. 1 of patent 291,139?

Ans. No. I never saw anything of that kind before that.

X Q. 614. Will you testify that you saw no water-closet constructed as shown in the Peters & Donald patent before your trip to Europe, in the fall of 1881?

205 Ans. None, except the one I made myself.

X Q. 615. When did you make a closet like the Peters & Donald patent before you went to Europe?

Ans. It was early in 1881.

X Q. 616. Where did you make it?

Ans. At the factory of Henry Huber.

X Q. 617. What time in the year 1881 did you make it?

Ans. The spring.

X Q. 618. What month?

Ans. I could not tell you.

X Q. 619. What became of that closet?

Ans. I have it yet.

X Q. 620. Was it made precisely as in the Peters & Donald patent?

Ans. No, sir.

X Q. 621. Wherein did it differ?

Ans. In the construction; that is all.

X Q. 622. In what principal of the construction did it differ?

By Mr. BROWNE: Objected to by counsel for complainants, as it is not shown that the witness is familiar with the construction shown in the Peters & Donald patent and is calling for expert opinion on the part of the witness.

Ans. The difference was that it was constructed of copper; an ordinary box lined with copper with a bulkhead and a regular two-valve service box.

X Q. 624. When you say a two-valve service box you mean there was a tank and sealed flushing chamber beneath the tank, do you?

Ans. There was a tank bulkhead.

X Q. 625. What is a bulkhead?

Ans. Service boxes—either one.

X Q. 626. The construction, then, that you made in 1881 had the tank, and the sealed flushing chamber, and the bowl, and the air pipe leading from the air space between two traps, and the flushing pipe, as substantially shown in the Peters & Donald patent, had it?

206 Objected to by counsel for complainants, as it is not shown that the witness is familiar with the construction shown in the Peters & Donald patent and as calling for an expert opinion on the part of the witness.

Ans. Yes, sir.

X Q. 627. Did you make that before you saw the Peters & Donald patent?

Ans. Yes, sir.

X Q. 628. You made that before you saw the Peters & Donald patent at all?

Ans. Yes, sir.

X Q. 629. And you used it before you saw the Peters & Donald patent, did you?

Ans. Yes, sir.

X Q. 630. How long did you use it?

By Mr. BROWNE: Objected to as immaterial and incompetent.

Ans. I could not tell. I used it long enough to satisfy myself everything was right before putting it on the market.

X Q. 631. And all of that occurred before you saw the Peters & Donald patent?

Ans. Yes, sir.

X Q. 632. Or before you saw any description of the Peters & Donald patent?

Ans. Yes, sir.

X Q. 633. You first learned the Peters & Donald patent through the Patent Office, did you not?

Ans. Yes, sir.

X Q. 634. You learned of that while you were trying to get letters patent 255,485, did you not?

Ans. What patent is that?

X Q. 635. That is the one of which 291,139 is an improvement, I think.

By Mr. BROWNE: Objected to as not germane to the direct examination.

X Q. 636. The question is you learned of the existence of the Peters & Donald patent through the Patent Office while your application was pending for letters patent 255,485, did you not?

(Same objection.)

207 Ans. Yes, sir.

X Q. 637. You said in your direct examination that a closet constructed as shown in Fig. 1 of Boyle's experimental tank would not be operative, I believe, did you not?

Ans. Yes, sir.

X Q. 638. Is that the reason why you ceased experimenting with that and proceeding to some other kind of a flushing apparatus?

Ans. That operated well enough, but I proceeded to construct a tank to suit the New York market.

X Q. 639. Was there any method of breaking the vacuum in the tank which you say you constructed like Fig. 1, Boyle's experimental tank?

Ans. No, sir.

X Q. 640. Is that why it was not operative?

Ans. I never intended it to be operative—for a water-closet to be used.

X Q. 641. What did you intend it for, in the name of common sense?

Ans. I wanted to get at the best shape to rarefy the air.

X Q. 642. Then, as a matter of fact, you never intended the construction, which you say you made, as shown in Fig. 1 of Boyle's experimental tank, to be an operative water-closet?

Ans. No, sir.

X Q. 643. You began and ended it in experiment, did you not?

Ans. Yes, sir.

X Q. 644. And you abandoned it, did you not?

Ans. I cannot say I did.

X Q. 645. Did you keep on with that particular affair?

Ans. No; not with that particular form.

X Q. 646. And you quit it, did you not?

Ans. Yes, sir; for a better one.

Cross-examination closed.

Redirect examination by Mr. BROWNE:

208 647 redirect interrogatory. In reference to Complainants' Exhibit Boyle's Experimental Tank you have testified that you considered said tank inoperative. Please explain in what respects said tank is inoperative.

By Mr. TAYLOR: Objected to by counsel for defendant because the witness has stated first in his direct examination that it was so inoperative, and counsel has also cross-examined on that point as to what he said in chief, and because it is incompetent and irrelevant.

Ans. Because there is no provision made for an after-wash.

Q. 648. You have referred in your cross-examination to closets as made for the New York market. Please explain more in detail what you mean by this expression, and what you intended, and what idea, if any, you wish to convey by the use of those words.

By Mr. TAYLOR: Objected to as irrelevant, immaterial, and not legitimate redirect examination.

Ans. The filling of the bowl or providing a water surface after the vacuum is broken.

Q. 649. Please examine the paper I now show you and state, if you know, what it is.

Ans. An agreement or license between Henry Huber and myself, dated the 27th day of January, 1885, and signed by myself and Henry Huber.

Q. 650. That is your signature?

Ans. Yes, sir.

Counsel for complainants hereby introduces the said license agreement in evidence, and the same is marked "Complainants' Exhibit Boyle & Huber Agreement No. 17," and complainants' counsel instructs the examiner to copy the following clauses into the record, to wit:

License Agreement.

209 These articles of agreement, entered into between James E. Boyle, of Brooklyn, in the county of Kings, and State of New York, party of the first part, and Henry Huber, of the city, county, and State of New York, party of the second part, witnesseth:

That, whereas, the said party of the first part is the sole owner of certain United States patents granted to him and of certain inventions by him made, the patents on which have been applied for as follows:

* * * * * * * *

Patent No. 291,139, dated January 1st, 1884, for "flushing apparatus for water-closets."

* * * * * * * *

And whereas two certain agreements have heretofore been entered into between the parties hereto, dated respectively the 5th day of

August, 1881, and the 4th day of October, 1883, whereby the said Boyle did license the said Huber to manufacture and sell under certain of said patents;

And whereas the parties hereto are desirous of making certain new agreements in relation to the said patents;

Now, therefore, the parties hereto have agreed together and do hereby bind themselves and their respective heirs, executors, and other legal representatives as follows, to wit:

First. Both the said agreements are hereby declared to have been cancelled and terminated upon the first day of August, 1884, from and after which date they shall have no force or effect whatever, and this present agreement shall commence and take effect from said first day of August, and shall be understood and construed as though it had been dated and executed upon that date.

Second. That the party of the first part hereby grants unto the party of the second part, individually, the exclusive right and license, subject to the conditions hereinafter named, to manufacture and sell the goods or articles covered by the said patents respectively, the right and license hereby granted to continue, with re-
210 spect to each of said patents, until the expiration thereof, unless sooner otherwise terminated as is hereinafter provided.

Third. The party of the second part agrees to pay unto the party of the first part on the various goods or articles manufactured and sold by him or for him under the said patents the following royalties:

* * * * * * *

3. On the "Tidal Wave water-closet, No. 1," the "Tidal Wave water-closet, No. 2," the "Cascade water-closet," or other water-closets covered by either of the said patents, Nos. 255,485 or 291,139, or the patent to be granted on said application filed December 20th, 1884, the sum of — dollars each. This royalty shall include that on the "Standard Connection" (patent No. 291,140) and on the "Boyle Ball Cock" (patent No. 290,204) whenever the same are sold with and form a part of the said water-closets or the supply tanks thereof.

* * * * * * *

Eleventh. This agreement shall, unless sooner terminated as hereinbefore provided, remain in force until the expiration of the last of the patents to which it relates, but as each of the said patents expires the royalties paid thereon shall discontinue, and other patents may from time to time be added to this agreement by a supplementary agreement to that effect, to be executed by the parties hereto or their legal representatives, in which case all the provisions of this agreement shall apply to the new patents so introduced equally with the patents hereinabove recited.

Twelfth. In case either of the said patents is infringed it shall be the duty of the party of the second part to take legal steps to restrain such infringement and recover damages therefor, the expense of such proceeding to be shared equally by the parties hereto, and the share thereof belonging to the party of the first part to be deducted by the party of the second part from the royalties accruing to his credit; and the party of the first part hereby gives unto the

party of the second part full right, power, and authority to institute and maintain actions against infringers, either in law
211 or in equity, under his said patents, and if damages or profits be recovered the same shall be equally divided between the parties hereto.

In witness whereof we have hereunto set our hands and seals to this indenture in duplicate, this 27th day of January, 1885.

J. E. BOYLE, [L. S.]
HENRY HUBER. [L. S.]

Witness:
ARTHUR C. FRAZER,
Solicitor of Patents, 10 *Spruce Street, New York.*

Counsel further instructs the examiner to seal up the original agreement and to mark upon the envelope containing the same the following words: "This envelope contains the original license agreement between James E. Boyle and Henry Huber, dated January 27th, 1885, and referred to in the testimony, in answer to interrogatory 650, as "Complainants' Exhibit Boyle & Huber Agreement No. 17," the same being the license agreement referred to in the bill of complaint, in order that the court may determine whether or not said license agreement should be disclosed in full in the record.

By Mr. TAYLOR: Counsel for the defendant insists that if said license agreement be used as a link in the chain of evidence in this cause that it shall go in in full, and that they shall have the right to cross-examine the witness now on the stand and who is a party thereto with reference to same, and also the right to the use of the same in order to adduce therefrom a legal interpretation which shall be placed upon the same to the same effect as they would have to use any other link in the chain of evidence testified in the bill as grounds for recovery.

212 By Mr. BROWNE: Counsel for complainants states that those portions of the license agreement already copied into the record are the only clauses contained in the said agreement pertaining to the cause now in issue.

R. D. Q. 651. Is the signature to the license agreement just introduced in evidence your true and genuine signature?

Ans. Yes, sir.

R. D. Q. 652. Is this the only license agreement between yourself and Henry Huber involving the patent or patents here in suit?

Ans. Yes, sir.

J. E. BOYLE.

Attest: BEN. L. FAIRCHILD,
Special Examiner.

THURSDAY, *February* 23, 1888.

Appearances as before.

Deposition of Adolph C. Tiedemann.

The testimony of Mr. Tiedemann was taken on the date here given, the examination of Mr. Frazer having been suspended by consent for the purpose of taking this testimony.

ADOLPH C. TIEDEMANN, being duly sworn, testifies as follows:

Int. 653. What is your name, age, residence, and occupation?

Ans. My name is Adolph C. Tiedemann; member of the firm of Henry Huber & Co., manufacturers of plumbing goods; I reside at 624 Park avenue; my place of business is 81 Beekman street, New York.

Int. 654. For how long a time have you manufactured pneumatic siphon water-closets?

Ans. Since the fall of 1881.

213 Int. 655. When did you first commence the manufacture of water-closets using a tank in which the outflowing water passes through a suction injector or "trombe" for producing a rarefaction of the air in the confined air space in the outlet passage from the bowl?

Ans. As well as I can remember in the year—it was in the fall of 1883 we commenced the manufacture of "trombe" tanks, but the sales did not take place until January, 1884.

Int. 656. Can you state how many water-closets of the pneumatic siphon kind you have manufactured up to the first of October, 1887?

Ans. Yes, sir.

Int. 657. Please state how many of such closets you have manufactured, giving the number manufactured in each year.

Ans. We have manufactured of pneumatic closets all styles, in the year 1882, 296; in the year 1883, 467; in the year 1884, 604; in the year 1885, 1,976; in the year 1886, 2,803; up to October, 1887, nine months, 2,728; total, 8,874.

Int. 658. How many of these closets in each year have been of the trombe class?

Ans. The total up to October 1st, 1887, is 7,764. Of this number 750 are trombe tanks used with our "Tidal Wave" class of closets, and 7,014 are trombe tanks used with our "Cascade" class of closets. I can name the exact number used in each year of this 7,014 tanks.

Int. 659. Please do so.

Ans. In 1884, 355; in 1885, 1,756; in 1886, 2,534, and up to October 1st, 1887, 2,369.

Direct examination closed.

Cross-examination by Mr. TAYLOR:

X Q. 660. How long have you been a member of the firm of Henry Huber & Co.?

Ans. Since the 8th of August, 1881.

214 X Q. 661. You are an equal partner in the firm?

Ans. No, sir.

X Q. 662. But you have an interest?

Ans. Yes, sir.

X Q. 663. What is the highest-priced closet you make—I don't mean the price at which you sell it, but the class which you sell—the highest priced?

Ans. The "Tidal Wave" class is the highest priced.

X Q. 664. What kind of a tank do you use with the "Tidal Wave" closet?

Ans. We use two kinds. We use the automatic tank for seat action and the trombe tank for closet operated by a pull.

X Q. 665. Which class, if either, do you use the cistern with the vacuum or sealed tank under a cistern?

Ans. With the "Tidal Wave" class.

X Q. 666. Do you always construct the Tidal Wave closet with a cistern and a chamber under it?

Ans. Yes, sir.

X Q. 667. Your attention is now called to Complainants' Exhibit Trombe Tank, and you will please state whether this shows the kind of tank that you use with the Tidal Wave closet.

Ans. Yes, sir; that is the style we use with the Tidal Wave closet.

X Q. 668. Is that the only style you use with the Tidal Wave closet?

Ans. No, sir.

X Q. 669. Please, then, explain the other style of tank used with the Tidal Wave closet, wherein it differs from this tank marked "Complainants' Exhibit Trombe Tank."

Ans. The other tank has a service box to which there is an inlet valve to fill the service box and an outlet valve to flush the closet. This tank is operated by seat action. When the seat is depressed a chain is pulled, the inlet valve opens and the outlet valve closes, admitting water into the service box and expelling the air that is in the service box through an air valve. When the seat is relieved the position of the valve changes, the inlet valve is closed

215 and the outlet valve opens, allowing the water to flush the closet. At the same time the air valve shuts off any air from the service box, creating a partial vacuum in the service box and drawing air from the space between the two traps of the closet through an air pipe that communicates with the closet.

X Q. 670. Please state whether what you have called the service box, but which is designated in the Boyle patent as flushing chamber, is one and the same thing.

Ans. This is a different closet altogether; this is not the one I described (referring to the figure 1 of the Boyle reissued patent No. 10826 handed witness).

X Q. 671. Please examine the figure shown in the Peters & Donald patent No. 260,232 and say whether it is the one you have described.

By Mr. BROWNE: Question objected to by counsel for complainants on the ground that it is not proper cross-examination and because it has not been shown that the witness is familiar with the patents referred to, nor that the patents illustrate the tank which the witness has just described.

Ans. This is a different closet from what I have described.

X Q. 672. State whether the cistern or tank—the flushing chamber in the tank that you have described—is a sealed or air-tight chamber.

Ans. It is hermetically sealed when flushing the closet.

X Q. 673. In any construction of the "Tidal Wave" closet tank have you always constructed your tank with a reservoir and beneath that a flushing tank?

Ans. No; we make tanks without service boxes.

X Q. 674. For the Tidal Wave?

Ans. For the Tidal Wave closet—any pneumatic closet.

X Q. 675. Do you make your Tidal Wave closet so as to form a connection between the chamber F—that is, the flushing chamber—and a connection with a pipe leading into the outer air?

216 Ans. Yes; all service-box tanks require that, anyway.

X Q. 676. Do each of the class of tanks which you described have what you have called a service box or a flushing chamber, and does such flushing chamber have a connection with the outer air to ventilate it or for ventilation?

By Mr. BROWNE: This line of cross-examination and this particular question objected to on the ground that it is not proper cross-examination, and that the witness has not been shown to be an expert in the manufacture of water-closets and in their construction.

Ans. Service-box tanks have this open pipe—vent pipe.

X Q. 677. Is this ventilating pipe one of the essential features of the class of tanks having the flushing chamber?

(Same objection.)

Ans. Not to my knowledge—no, sir.

X Q. 678. Do you mean you don't know?

Ans. I say no, sir; it is not an essential feature.

X Q. 679. Yes you make all of these with a pipe leading from the flushing chamber to the outer air, do you?

Ans. All service-box tanks must have this open pipe, whether it is a pneumatic closet or any other style. Any service-box tank must have an open pipe.

X Q. 680. And without it the construction would be incomplete?

Ans. Without the pipe the tank would not be operative, because the air could not be forced out of the service box.

X Q. 681. By service box you mean a subchamber in which the water is first permitted to flow from a larger cistern and goes down the flushing pipe?

Ans. Yes, sir.

X Q. 682. Then, in all classes of tanks that you have ever seen

made where the flushing chamber is used in connection with
217 the tank or what you have designated as service box there has been a connection between such service box and the outer air, in order to allow the air to escape from such chamber into the outer air?

Ans. Yes, sir.

X Q. 683. And that is absolutely necessary to operate it?

Ans. To operate the service-box tank; yes, sir.

X Q. 684. Your firm pays Mr. Boyle a royalty, does it not, on tanks which you manufacture under letters patent granted to him?

By Mr. BROWNE: Objected to as not proper cross-examination.

X Q. 685. That royalty is paid by the firm of Henry Huber & Co., is it not?

(Same objection.)

Ans. I refuse to answer that question until my counsel instructs me.

Counsel for complainant says that the witness may answer the question, but it is subject to his objection.

Ans. Royalties are paid by the firm of Henry Huber & Co.

X Q. 686. It that by virtue of a written license that you make these payments?

(Same objection.)

Ans. My partner is licensee to manufacture these closets.

X Q. 687. I ask you whether there is a written agreement between Boyle and yourself in regard to this matter.

Ans. No.

X Q. 688. Is the writing between Boyle and Henry Huber, your partner?

Ans. Yes, sir.

X Q. 689. Whatever the agreement is, then, is contained in that writing, is it?

Ans. Yes, sir.

X Q. 690. Whatever royalties are paid to Mr. Boyle, however, are paid by the firm of Henry Huber & Co., you have said?

Ans. Yes, sir.

218 X Q. 691. Is Boyle an employee of your firm?

Ans. No, sir.

X Q. 692. Has he ever been?

Ans. No, sir.

X Q. 693. Who is the patent solicitor of your firm?

Ans. Mr. Arthur C. Fraser.

X Q. 694. How long has he been such?

Ans. Since I became a member of the firm.

X Q. 695. Was Mr. Arthur C. Fraser the solicitor for your firm at the time the letters patent 260,232, which were granted to Henry

Huber by assignment from Stewart Peters and William Donald, was granted?

Ans. Yes; Burke, Fraser & Connett. Mr. Fraser was connected with that firm.

X Q. 696. Who was the particular solicitor of the firm at that time?

Ans. Mr. Fraser always attended to our matters.

X Q. 697. Who paid Mr. Fraser for acting as solicitor in obtaining the Peters & Donald patent, 260,232, granted to Henry Huber?

By Mr. BROWNE: Objected to on the ground that it is not proper cross-examination, and that it is not shown that the firm of Henry Huber & Co., of which the witness is a member, had any connection with the patent of Peters & Donald.

Ans. Henry Huber.

X Q. 698. Was that expense charged to Henry Huber's private account or to the firm?

Ans. To Mr. Huber's private account.

X Q. 699. What interest have you in the Peters & Donald patent, No. 260,232?

Ans. No other interest than that the firm has the sole right to manufacture closets under the Peters & Donald patent.

X Q. 700. Has the firm of Henry Huber & Co., of which you are a member, the sole and exclusive right to manufacture under that patent?

Ans. Yes, sir.

X Q. 701. Are you sure of that?

Ans. Yes, sir.

219 X Q. 702. How did you get that right?

Ans. By virtue of a contract with my partner.

X Q. 703. Is that in writing?

Ans. Yes, sir.

X Q. 704. When was that made?

Ans. Stipulated in our partnership agreement.

X Q. 705. Does the firm of Henry Huber & Co., of which you are a member, pay Henry Huber a royalty for using that patent?

Ans. We pay no royalty to Henry Huber.

X Q. 706. Do you pay James E. Boyle a royalty on that patent—I mean, of course, the Peters & Donald patent, No. 260,232?

Ans. No, sir.

X Q. 707. Do you mean to be understood, now, that the entire beneficial interest in the Peters & Donald patent, No. 260,232, is vested in the firm of Henry Huber & Co.?

Ans. It is owned by my partner, Henry Huber.

X Q. 708. And is your firm the sole and exclusive licensee under that patent? I want to know that.

Ans. Yes, sir; I say my partner, Henry Huber, is the owner of that patent. It is assigned to him.

X Q. 709. And your firm has exclusive right to use that patent now; that is what you mean to state, is it?

Ans. That is what I mean to state.

X Q. 710. Has Henry Huber granted a license to any one else to use that patent—the Peters & Donald patent?

Ans. No, sir.

X Q. 711. Do you mean to testify that your firm, the firm of Henry Huber & Co., has exclusive right for the United States to use the Peters & Donald patent, No. 260,232?

Ans. Yes, sir.

X Q. 712. How long have they had that exclusive right, now, Mr. Tiedemann?

Ans. Since the date that it was assigned to Henry Huber.

X Q. 713. That was before the patent was granted?

220 Ans. Since the patent was assigned to Henry Huber we have had the exclusive right to manufacture under that patent.

X Q. 714. Had the firm of Henry Huber & Co. acquired that right—that is, the exclusive right—whatever is in the Peters & Donald patent, No. 260,232, before the patent was granted on the 27th day of June, 1882, to become operative when the patent was granted?

Ans. Yes, sir.

X Q. 715. Then, before ever the patent No. 260,232 was issued by the Patent Office your firm, you say, had acquired exclusive right from Henry Huber to whatever there might be in that patent when granted?

Ans. Yes, sir.

X Q. 716. And you hold it to-day?

Ans. Hold it to-day.

X Q. 717. Who composes the firm of Henry Huber & Co.?

Ans. Henry Huber and myself.

X Q. 718. You, then, have a direct interest in sustaining this patent, have you not—I mean, of course, the Peters & Donald patent?

Ans. Yes, sir.

X Q. 719. Henry Huber acquired his interest in this Peters & Donald patent, whatever it might be, through an assignment of James E. Boyle, did he not?

By Mr. BROWN: Objected to on the ground that it seeks for hearsay evidence on the part of the witness, and that the facts desired to be produced are matters of record.

Ans. Through an assignment from Stewart Peters and William Donald he acquired the right.

X Q. 720. Do you mean to testify that Messrs. Peters & Donald made an assignment direct to Henry Huber?

(Same objection.)

Ans. I do not remember exactly how that was.

X Q. 721. I now repeat a question I asked a moment ago—you are directly interested in having this patent No. 260,232 held good, are you not?

221 Ans. Yes, sir.

X Q. 722. You have the same interest in that regard that

Mr. Henry Huber has, in proportion to your interest in the partnership, have you not?

Ans. Yes, sir; that is right.

X Q. 723. Has Boyle any interest—James E. Boyle any interest—in sustaining this Peters & Donald patent that you know of?

Ans. No.

X Q. 724. Now, Mr. Tiedemann, is it not true that the firm of Henry Huber & Co. sent Boyle to Europe to find Peters & Donald to try to get an assignment of their invention or a part of their invention before Huber ever acquired any interest in this patent at all?

Ans. Yes, sir.

X Q. 725. And the firm paid his expenses, did they not?

Ans. I don't remember.

X Q. 726. Will you say they did not?

Ans. I say I don't remember.

X Q. 727. Did not the firm of Henry Huber & Co. supply Boyle with money to buy whatever he got of Peters & Donald on the occasion he went to Europe in 1881?

By Mr. BROWNE: Objected to on the ground that it is not proper cross-examination. Counsel for defendant, under cover of cross-examination, are endeavoring to make the witness their own.

Ans. I don't remember whether it was to be paid by Henry Huber or the firm.

X Q. 728. At any rate, the firm reaped the benefit thereof, did it not, whatever interest there was in it?

Ans. Yes, sir.

X Q. 729. Henry Huber never got any more advantage or benefit out of this patent than you did, in proportion to his interest in the copartnership of Henry Huber & Co., did he?

Ans. Yes, sir.

X Q. 730. Well, you may tell me in what respect.

Ans. I don't understand the question.

222 X Q. 731. Did you not understand the former question?

Ans. The former, yes; but not the last question.

X Q. 732. You have already stated that you have the same interest now in this patent that Henry Huber had, in proportion to your interest in the firm, have you not?

Ans. Yes, sir.

X Q. 733. And it is true that you have the same interest to the extent of your interest in the firm, is it not?

Ans. Yes, sir.

X Q. 734. And it is true that your firm has the sole and exclusive right that is granted and covered by this patent, if the patent is valid, is it?

Ans. Yes, sir.

X Q. 735. And it is true, therefore, that you are interested in sustaining this patent in the suits now pending?

Ans. Yes, sir.

X Q. 736. The defeat of this patent, in your judgment, will be an injury to you, will it?

Ans. Certainly.

X Q. 737. Because you have a direct pecuniary interest in it, have you, and in its results?

Ans. Yes, sir.

X Q. 738. Have you, as a member of the firm of Henry Huber & Co., an interest in the Boyle patent, involved in this suit, or the use of the construction under the Boyle patent?

Ans. Just the same as it is in the Peters and Donald patent.

X Q. 739. How long have you had that interest—that is, the interest in the Boyle patent involved in this suit?

Ans. From the day such patents were assigned to Henry Huber.

X Q. 740. What royalty does Henry Huber or the firm of Henry Huber & Co., if any, pay to Peters & Donald?

Ans. No royalty to Peters & Donald.

223 X Q. 741. What, if any, did the firm pay to Peters & Donald through Boyle to get the assignment they did get?

Ans. I don't remember the amount.

X Q. 742. But you do remember you sent Boyle over to Europe?

Ans. Oh, certainly, I do remember that.

X Q. 743. How long had you known of the Peters & Donald patent before you sent Boyle to Europe?

Ans. I don't remember.

X Q. 744. When did you learn that Peters & Donald had failed to pay their stamp duty in 1881 of 100 pounds?

Ans. I don't remember.

X Q. 743. Did you learn it before or after Boyle went to Europe?

Ans. After he went to Europe.

X Q. 746. Who told you, Boyle?

Ans. I don't remember who gave me the information.

X Q. 747. You don't remember who gave it?

Ans. No.

X Q. 748. Boyle went over in the interest of Henry Huber & Co., did he not?

Ans. In the interest of Henry Huber.

X Q. 749. Will you testify that the firm of Henry Huber & Co. did not furnish the money to Boyle?

Ans. Henry Huber & Co. no doubt advanced the money.

X Q. 750. Did they get it back?

Ans. As much as I remember, it was charged to Mr. Huber's personal account.

X Q. 751. When the firm of Henry Huber & Co. acquired from Henry Huber the sole and exclusive right under these letters patent, or whatever they were worth, didn't the firm then credit Henry Huber with as much as he had advanced to Boyle?

Ans. No, sir.

X Q. 752. Are you sure of that?

Ans. Certainly.

X Q. 753. Are you sure the expense money advanced to Boyle was charged to Henry Huber's account?

224 Ans. I said as much as I can remember it was charged to Henry Huber.

X Q. 754. But you don't remember definitely about it, do you, sir?

Ans. I can easily ascertain that.

X Q. 755. Will you ascertain and let us know?

Ans. Certainly.

X Q. 756. For how long a term was your partnership to exist?

Ans. To December 31st, 1889.

X Q. 757. Then the sole and exclusive right under this Peters & Donald patent that you acquired by reason of your copartnership agreement—that is, the firm acquired—extends to when?

Ans. December 31st, 1889.

X Q. 758. Until the expiration of the copartnership?

Ans. Until the expiration of the copartnership.

X Q. 759. You have just about as much interest, then, in pushing this suit as Henry Huber has, to the extent of the interest of your partnership, have you not?

Ans. Yes, sir.

X Q. 760. If you make us out infringers you would then be advantaged to the extent of the interest of your partnership, would you not?

Ans. Yes, sir.

Notice is hereby given by counsel for complainants of a motion to expunge from the record the entire cross-examination of Adolf C. Tiedemann as being incompetent and irrelevant and as improper cross-examination, in that the defendants have been endeavoring, under cover of cross examination, to make the witness their own.

Examination of Mr. Tiedemann closed.

ADOLF C. TIEDEMANN.

Attest: BEN. L. FAIRCHILD,
Special Examiner.

225 *Stipulations.*

It is admitted by counsel for the defendant that the signature of James E. Boyle to the assignment to Henry Huber of whatever interest he acquired in the Peters & Donald invention is genuine, and that the same was delivered to Henry Huber as of the day said assignment there states.

It is also stipulated and agreed between the counsel, and it is so understood, that at the hearing of this cause and on appeal, if there should be an appeal, that the stamp duty of one hundred pounds, which was required to be paid by the British patent law and the conditions of the patent, by Stewart Peters and William Donald, on or before the 7th day of April, 1881, was not paid at that time or at any other time by said Peters or Donald or any one for them. This stipulation is intended to apply to letters patent No. 1207, dated

April 7th, 1874, a certified copy of which complainants have put in evidence as an exhibit.

It is hereby stipulated and agreed between counsel that a copartnership agreement was entered into June 24th, 1885, between Henry Huber and Adolf C. Tiedemann, constituting the firm of Henry Huber & Co., which, by its terms, does not expire until December 31st, 1889, and that by the terms of said agreement said Huber & Tiedemann are to share the profits and bear the losses in a certain proportion specified in said agreement, but the exact proportions are unnecessary to be stated in this stipulation, and that said agreement contains the following clause, which has a bearing in this case, and that it is the only clause in said copartnership agreement which it is necessary to here set out as affecting this cause, which clause reads as follows, to wit: "The said Huber also brings in and contributes the use, benefit, profit, and advantage and the sole and exclusive use, benefit, profit, and advantage (during the continuance of said copartnership) of each and all of his United States patents and patent rights which he now has or which he
226 may acquire at any time during the continuance of said copartnership; also all the licenses which said Huber has by and under a certain agreement made and entered into January 25th, 1885, by and between said Huber and one James E. Boyle, and all the rights which said Huber has under said agreement. The expenses on acquiring any such patents or patent rights or licenses shall not be borne by the copartnership but by said Huber individually. The expenses of maintaining such patents and patent rights and licenses and of suits for the infringement thereof or any of the patents mentioned in said agreement between Boyle and Huber, and all the royalties payable thereunder, shall be borne by the copartnership as an expense of the business."

It is further admitted and agreed that said Huber & Company are still conducting business under said contract, and that the partnership agreement and the quotations therefrom is in full force and effect, and was at the time when this was commenced.

It is admitted that the signature of A. C. Fraser as a witness to the license agreement between James E. Boyle and Henry Huber is a genuine signature of said Fraser, and that he was a witness thereto. It is also admitted that the signature of Henry Huber to said license agreement is genuine.

BEN. L. FAIRCHILD,
Special Examiner.

227 In the Circuit Court of the United States for the Eastern Division of the Eastern District of Missouri.

HENRY HUBER and JAMES E. BOYLE, Complainants,
vs.
N. O. NELSON MANUFACTURING COMPANY, Defendant. } In Equity.

STATE OF NEW YORK,
City and County of New York, } *ss:*

I, Ben. L. Fairchild, an examiner duly appointed by the circuit court of the United States for the eastern division of the eastern district of Missouri, do hereby certify that the foregoing are the proofs for final hearing taken before me in the above-entitled cause on the part of the complainants, under and pursuant to the 67th rule of the Supreme Court of the United States, as amended.

I do further certify that I am not of counsel nor attorney for either of the parties, nor in anywise interested in the event of said cause.

I further certify that Arthur S. Browne, Esq., appeared on the part of the complainants, and Seneca N. Taylor, Esq., and B. F. Rex, Esq., appeared on the part of defendant in the taking of said proofs.

BEN. L. FAIRCHILD.

228 *Conclusion of Complainants' Testimony on Prima Facie Case.*

In the Circuit Court of the United States for the Eastern Division of the Eastern District of Missouri.

HENRY HUBER *et al.*
vs.
THE N. O. NELSON MANUFACTURING COMPANY.

It is stipulated by and between counsel for complainant- and counsel for defendant in the above-entitled case that the following documents may be offered in evidence on this date by complainants' counsel and marked as complainants' exhibits by Paul Bakewell, solicitor for complainant-, instead of by the special examiner or by a notary public or other officer, subject, however, to any objections as to incompetency, irrelevancy, or immateriality, &c., which counsel for defendant may make, as these documents are respectively offered in evidence by complainants' counsel.

PAUL BAKEWELL,
Solicitor for Complainants.
B. F. REX,
Solicitor for Defendant.

St. Louis, May 17, 1888.

In pursuance of the foregoing stipulation, Paul Bakewell being present on behalf of complainants and B. F. Rex being present on behalf of defendant, on this 17th day of May, 1888, the following proceedings were had:

229 Counsel for complainants offers in evidence certified copy from the files of the United States Patent Office of the file-wrapper in the matter of the reissue letters patent granted to James E. Boyle, April 19, 1887, No. 10826, for improvements in flushing apparatus for water-closets, and the same is marked by the complainants' solicitor, Paul Bakewell, "Complainants' Exhibit A *x*."

Objected to by defendant's solicitor as incompetent and irrelevant.

Complainants' solicitor offers in evidence duly certified copy from the files of the United States Patent Office of statement and affidavit of James E. Boyle, dated December 27, 1884, and filed in the United States Patent Office December 29, 1884, including a tracing of the drawing referred to therein, in the matter of the application of James E. Boyle for reissue of letters patent granted January 1, 1884, for improvement in flushing apparatus for water-closets, and the same is marked by complainants' solicitor, Paul Bakewell, "Complainants' Exhibit B *x*."

Objected to by solicitor for defendant as incompetent and irrelevant, and because it is evidence introduced in a proceeding to which defendant was neither party nor privy, and because it had no opportunity to cross-examine the affiant upon the matters therein stated.

Complainants' solicitor offers in evidence duly certified copy from the files of the United States Patent Office of the affidavit of Arthur C. Fraser, executed December 27, 1884, and filed December 29, 1884, in the matter of the application of James E. Boyle for reissue letters patent filed January 2, 1885, for improvement in flushing apparatus for water-closets, and the same is marked by complainants' solicitor, Paul Bakewell, "Complainants' Exhibit C *x*."

Solicitor for defendant makes the same objection as to "Exhibit B *x*."

230 Complainants' solicitor offers in evidence a duly certified copy from the files of the United States Patent Office of the examiner's letter, dated January 27, 1885, in the matter of the application of James E. Boyle for a reissue of letters patent No. 291,139, granted on January 1, 1884, for improvement in flushing apparatus for water-closets, and the same is marked by complainants' solicitor, Paul Bakewell, "Complainants' Exhibit D *x*."

Objected to by defendant's solicitor as incompetent and irrelevant.

Complainants' solicitor offers in evidence a duly certified copy from the files of the United States Patent Office of the argument of attorneys on behalf of Boyle, filed March 16, 1885, in the matter of the application of James E. Boyle for a reissue of letters patent No. 291,139, granted January 1, 1884, for improvement in flushing apparatus for water-closets, and the same is marked by complainants' solicitor, Paul Bakewell, "Complainants' Exhibit E *x*."

Objected to by solicitor for defendant as incompetent, irrelevant, and immaterial.

Complainants' solicitor offers in evidence duly certified copy of the files of the United States Patent Office of the examiner's letter of

rejection, dated April 17, 1885, in the matter of the application of James E. Boyle for reissue of letters patent No. 291,139, granted January 1, 1884, for improvements in flushing apparatus for water-closets, and the same is marked by the complainants' solicitor, Paul Bakewell, "Complainants' Exhibit F *x*."

(Same objection.)

Complainants' solicitor offers in evidence duly certified copy from the files of the United States Patent Office of the file-wrapper and contents of appeal to board of examiners-in-chief in the matter of the application of James E. Boyle for the reissue of letters patent No. 291,139, granted January 1, 1884, for improvement in flushing apparatus for water-closets, and the same is marked by the complainants' solicitor. Paul Bakewell, "Complainants' Exhibit G *x*."

That portion of Exhibit G *x* comprising the brief of the attorneys of James E. Boyle is separately objected — as irrelvant and
231 incompetent, and the exhibit as a whole is objected to, 1st, because it contains said brief; and, 2d, because everything else it contains is incompetent and irrelevant.

Complainants' solicitor offers in evidence a duly certified copy from the files of the United States Patent Office of the examiner's letter, dated May 21, 1886, and declaring an interference in the matter of the application of James E. Boyle for reissue of letters patent No. 291,139, granted January 1, 1884, for improvement in flushing apparatus for water-closets, and the same is marked by complainants' solicitor, Paul Bakewell, "Complainants' Exhibit H *x*."

Objected to by solicitor for defendant as incompetent and irrelevant.

Complainants' solicitor offers in evidence duly certified copy from the files of the United States Patent Office of the decision of the examiner of interferences, dated March 7, 1887, granting priority in favor of Boyle in the matter of the interference of Hanson *v.* Boyle; subject-matter, water-closets, and the same is marked by complainants' solicitor, Paul Bakewell, "Complainants' Exhibit I *x*."

Objected to as incompetent, irrelevant, and immaterial. Defendant's solicitor also objects to each and all of complainants' said exhibits, viz., Exhibit A *x*, B *x*, C *x*, D *x*, E *x*, F *x*, G *x*, H *x*, and I *x*, on the ground that the whole record is not introduced, as appears by Exhibit A *x*, many portions of said record not being offered in evidence, viz: Amendment of March 31, 1885; letter of May 14, 1885; amendment of May 21, 1885; letter of June 1, 1885; letter of June 26, 1885; letter of July 10, 1885; letter of August 24, 1885; amendment of August 29, 1889, and many other portions of said record, as will more fully appear upon comparing the said exhibits offered with said file-wrapper.

PAUL BAKEWELL,
Solicitor for Complainants.
B. F. REX,
Solicitor for Defendant.

232 In the Circuit Court of the United States for the Eastern Division of the Eastern District of Missouri.

HENRY HUBER and JAMES E. BOYLE
vs.
N. O. NELSON MANUFACTURING COMPANY. } In Equity.

Notice is hereby given that we will proceed to take proofs for final hearing on the part of the complainants under the 67th rule in equity of the Supreme Court of the United States for courts of equity, as amended, or in accordance with the statute in such case made and provided and in pursuance of the rules and practice of this court, before a competent officer under said statute and rules, at the office of Messrs. A. C. Fraser & Co., 5 Beekman street, New York city, on the 7th day of September, 1888, at eleven o'clock in the forenoon.

We desire the evidence in this case to be adduced in this cause to be taken orally.

The following-named witnesses will be examined:

Henry Morton, of the Stevens Institute of Technology, Hoboken, N. J.

Rudolph Hering, of the department of the board of public works, 31 Chambers street, New York city.

Arthur C. Fraser, of 5 Beekman street, New York city.

James E. Boyle, of the city of Brooklyn, N. Y.

Adolf C. Tiedemann, of 624 Park avenue, New York city.

Edward Murphey, of 626 Third avenue, New York city.

233 Thomas J. Tuomey, of 1238 Third avenue, New York city.

William Young, of 1098 Third avenue, New York city.

Samuel Clark, of 430 Fourth avenue, New York city, and perhaps others.

You are invited to attend and cross-examine the witnesses produced. The examination will be adjourned from day to day and to such time and place as may be required without further notice.

PAUL BAKEWELL,
Counsel for Complainants.

To Seneca N. Taylor, Esq., and Benjamin F. Rex, counsel for defendant.

Received copy of the within August 23, 1888.

TAYLOR AND POLLARD,
Attorneys for Defendant.

In the Circuit Court of the United States for the Eastern Division of the Eastern District of Missouri.

HENRY HUBER and JAMES E. BOYLE
vs.
N. O. NELSON MANUFACTURING COMPANY. } In Equity.

It is hereby agreed that proofs in the nature of rebutting testimony for final hearing on behalf of the complainants may be

234 taken before John E. Gavin, notary public, with the same force and effect as if regularly taken before a standing examiner of the court, under the sixty-seventh rule in equity, as amended, of the Supreme Court of the United States.

It is further agreed, notwithstanding the fact that the time for taking testimony has expired, that the testimony taken shall have the same force and effect as if taken within the proper time, provided that the examination of witnesses on behalf of complainants shall be continued from day to day until the closing of the testimony.

TAYLOR & POLLARD,
B. F. REX,
Counsel for Defendant.

New York, Sept. 7th, 1888.

In the Circuit Court of the United States for the Eastern Division of the Eastern District of Missouri.

HENRY HUBER and JAMES E. BOYLE
vs.
N. O. NELSON MANUFACTURING COMPANY. } In Equity.

NEW YORK, *Sept. 7th*, 1888.

Testimony taken on behalf of complainants in above-entitled cause, pursuant to the sixty-seventh rule of the Supreme Court of the United States, in equity, as amended, before me, John E. Gavin, a notary public for the city and county of New York, at the office of Messrs. Arthur C. Fraser & Co., No. 5 Beekman St., New York city, N. Y.

235 Present: Arthur S. Browne, Esq., counsel for complainants; Seneca N. Taylor, Esq., Benjamin F. Rex, Esq., counsel for defendant.

SAMUEL CLARK, being called as a witness on behalf of the complainants and being duly sworn, according to law, to testify to the truth, the whole truth, and nothing but the truth in the matter of the controversy aforesaid, I did carefully examine the said Samuel Clark, and he did thereupon depose, testify, and say as follows, viz:

Direct examination by Mr. BROWNE:

Q. 1. What is your name, age, residence, and occupation?

Ans. Samuel Clark; about 50; 247 East One hundred and tenth street, New York city; plumbing business.

Q. 2. Where is your place of business?

Ans. 430 Fourth avenue, city.

Q. 3. How long have you been engaged in the plumbing business?

Ans. Thirty-five or thirty-six years.

Q. 4. Does your business include dealing in water-closets, and are you familiar with water-closets?

Ans. Yes, sir.

Q. 5. Are you acquainted with the firm of Henry Huber & Co., of New York city?

Ans. I am.

Q. 6. Please state whether or not you purchase water-closets or have purchased water-closets from Henry Huber & Co.

Ans. I have.

Q. 6½. Please give the names of such water-closets made by Henry Huber & Co. which you have dealt in.

Ans. I have purchased every kind they make.

Q. 7. Please state whether or not you are familiar with so-called pneumatic water-closets made by Henry Huber & Co.

Ans. Somewhat familiar with them.

Q. 8. If you have dealt in these pneumatic water-closets
236 please give the names of such as you have dealt in.

Ans. I have put up the Tidal Wave, the Geyser, Flume, and the Cascade; I cannot recall any others at present; I may have forgotten some.

Q. 9. Have you dealt in and put up for your customers many of these pneumatic closets, such as the Cascade, for example?

Ans. I have.

Q. 10. Do you know the manner in which these Cascade closets operate?

Ans. Well, yes; generally.

Q. 11. Can you state in a general way what you understand the manner of operation to be?

Ans. Do you mean in regard to the siphon?

Q. 12. Yes, in regard to the siphoning action.

Ans. Do you want me to explain——

Witness asks question to be read.

Ans. As I understand it, they have got a false bottom to the cistern, which we call a service box, with a tube running down to the arm of the bowl; when they raise the valve, the water rushing into this tube, the air is expelled from the air space between the two traps, forming the vacuum; and of course that is about all I know about it.

Q. 13. What is your opinion as to the Cascade closets?

(Objected to as irrelevant, incompetent, and immaterial by counsel for defendant.)

Ans. I think it is a very excellent closet.

Q. 14. What closet do you use in your own residence?

(Counsel for defendant objects to the question as irrelevant and immaterial.)

Ans. The Cascade.

Q. 15. How long have you had this closet in use?

(Counsel for defendant objects as above.)

Ans. Over three years, I think.

Q. 16. Please state whether or it is satisfactory.

(Counsel for defendant objects as above.)

Ans. Quite so.

237 Q. 17. State whether or not it is objectionable on account of giving bad odors.

(Objected to as leading, irrelevant, and immaterial.)

Ans. It is not.

Q. 18. Please state whether or not you have experienced any difficulty with it on this account.

(Same objection.)

Ans. None whatever.

Q. 19. Please state whether or not customers of yours have complained to you of Cascade closets put in by you for them on account of odors arising from the closet.

(Same objection.)

Ans. I don't recollect a single objection against them.

Q. 20. How long a time should the tank for a water-closet last without requiring attention or repairs?

Ans. That is a very difficult question to answer; it depends on certain conditions. The one in my house has been in constant use, and there has been no repairs to it yet.

Q. 21. How long does an ordinary tank last without being replaced?

(Objected to as incompetent, irrelevant, and immaterial.)

Ans. Up to within this last eight or ten years we have been in the habit of using lead-lined tanks, and I have known them to last twenty-five years. Now, making them out of copper lined or iron, a copper-lined tank, I think, ought to outlast a lead-lined one. About the length of time I cannot tell how long it would last.

Q. 22. What would you think of a tank which would get out of order in less than six months?

(Objected to as incompetent, irrelevant, and immaterial.)

Ans. Well, if the tank itself gave out in less than six months, I should say it was a very poor one.

Q. 23. Please state whether or not it is desirable or necessary for a water-closet tank to have an overflow device or means for carrying off water in case it should rise too high in the tank.

238 (Objected to for reasons last given.)

Ans. Yes; it is very necessary; absolutely necessary.

Q. 24. What would you think of a water-closet tank put upon the market without any overflow device?

(Counsel for defendant objects to the question as incompetent and utterly irrelevant to any of the issues of this case.)

Ans. It would be very dangerous.

Q. 25. Please state, if you know, which is the more expensive

tank—a wooden tank lined with copper, a wooden tank lined with lead, or an iron tank.

(Objected to as above.)

Ans. That depends on the quality of the material used.

Q. 26. Assume that each tank is made so as to be thoroughly serviceable, but without any ornamentation, then which would be the most expensive?

Objected to by counsel for defendant as incompetent, irrelevant, and meaningless and calling on the witness for a mere guess.

Ans. I could not answer that question put in that way. The lead-lined tanks, some of them, are lined with cast lead, which makes them more expensive; others again are lined with sheet lead; iron tanks come plain and they come enamelled, which makes material difference in the price. Therefore, unless you specify the tank, I could not give you the difference in the cost.

Q. 27. Please examine the tanks now shown you, having reference merely to the material of which the tanks themselves are made, and state whether a tank made of the material shown in one would be as expensive as one made of the material shown in the other.

Witness is here shown Complainants' Exhibit Trombe Tank and Defendant's Exhibit No. 14.

Ans. The copper tank costs the most.

Q. 28. Please designate which tank you refer to as the copper tank.

Ans. The Trombe (indicating at the time Complainants' Exhibit Trombe Tank).

239 Q. 29. Which do you consider the better tank, one made of iron, not enamelled, or one made of wood, copper-lined?

(Objected to as irrelevant, incompetent, and immaterial.)

Ans. Copper-lined is superior.

Q. 30. Please state in what respect an iron tank, not enamelled, is inferior to a wooden tank, copper-lined.

Ans. An iron tank rusts up and stains the bowl, and if there is any leathers around an iron tank they don't last any time.

Cross-examination by Mr. TAYLOR:

X Q. 31. Had you ever examined Defendant's Exhibit 14 before you were sworn in this case (indicating)?

Ans. Never saw it until I entered the room.

X Q. 32. Had you ever examined before you were sworn in this case Defendant's Exhibit Trombe Tank?

Ans. I have.

X Q. 33. When?

Ans. I often see them in my own store, and I have seen them in Henry Huber & Co.'s store.

X Q. 34. Has not Complainants' Exhibit Trombe Tank a cistern above, with a flushing chamber beneath?

Objected to by counsel for complainants as incompetent, irrelevant, and immaterial, the exhibit tank being itself the best evidence as to its construction, and for the further reason that the question is not germaine to the direct examination.

Ans. Well, you were in the habit in the trade of calling that under part the service box, but I suppose you could call it that.

X Q. 35. Is the outlet from the upper cistern into the flushing chamber larger than the outlet from the flushing chamber into the flushing pipe?

(Same objection.)

Ans. It is.

X Q. 36. What useful function is thereby subserved in Plaintiffs' Exhibit Trombe Tank?

240 Objected to by counsel for complainants for the same reasons above stated, and for the further reason that it does not appear from the direct examination that the witness is familiar with the details of construction in Complainants' Exhibit Trombe Tank.

Ans. The object of that is to fill the bowl after you drop the valve.

X Q. 37. In your opinion is that a useful and material function in the Trombe tank?

(Same objection.)

Ans. It is.

X Q. 38. How many of these Trombe tanks have you ever put up for customers?

Ans. Well, I really couldn't say that; more than a hundred.

X Q. 39. When did you begin to put up such tanks?

Ans. I think about three years and a half ago.

X Q. 40. State whether all of the Trombe tanks which you put up for customers were constructed with cistern above and a flushing chamber below, like this one now before you, marked Complainants' Exhibit Trombe Tank.

Ans. They appear all to be the same; they all had a second chamber, anyhow.

X Q. 41. State whether all of the Trombe tanks which you ever put up were constructed by Henry Huber & Co.

Ans. I bought them all there; I don't know whether they constructed them or not.

X Q. 42. Did you ever make personally or have made at your shop or factory a tank like Complainants' Exhibit Trombe Tank?

Ans. I did not.

X Q. 43. As a fact, then, you have no personal experience as to the actual cost of such a tank, have you?

Ans. Well, in former years we made all our own tanks and from that I have a general knowledge of what they cost.

241 X Q. 44. Of late years you have not made your own tanks, have you?

Ans. Occasionally we make one or two during a year; very seldom.

X Q. 45. Did you ever make a tank like Defendant's Exhibit 14, of iron?

Ans. No; never.

X Q. 46. Did you ever make an iron tank at all?

Ans. Never did.

X Q. 47. Neither galvanized nor ungalvanized?

Ans. Neither.

X Q. 48. Do you mean to swear that you know what it cost a factory to make a tank like Defendant's Exhibit 14 before you?

Ans. No; I don't mean to swear to anything of the kind.

X Q. 49. You have no knowledge on that subject, have you?

Ans. I have.

X Q. 50. State, then, what it cost to make such a tank as Defendant's Exhibit 14.

Ans. I suppose I can answer that in my own way. My knowledge is based on buying iron and copper tanks every day—what I pay for them; I don't know what they cost the factory.

X Q. 51. Mr. Clark, did you ever do any galvanizing of iron?

Ans. Never did.

X Q. 52. Do you know of your own knowledge what it costs to galvanize an iron cistern the size of Defendant's Exhibit 14?

(Objected to by counsel for complainant- as incompetent, irrelevant, and immaterial.)

Ans. I only know what it costs us; I don't know what the net cost of doing it would be.

X Q. 53. Please look at Defendant's Exhibit 14 and state whether a tank in shape and form like said exhibit could be readily constructed out of wood and lined with copper, in your opinion.

(Objected to by counsel for complainants as incompetent, irrelevant, and immaterial.)

242 Ans. I see no reason why it should not be made of wood and lined with copper.

X Q. 54. Such a tank as Defendant's Exhibit 14 could as readily be so made out of wood and lined with copper as could Complainants' Exhibit Trombe Tank, could it not, if that was the desire of the manufacturer?

(Same objection.)

Ans. Yes; I see no reason why it should not.

X Q. 55. It is a mere choice on the part of the manufacturer as to the material which he may use, is it not?

(Same objection.)

Ans. No; the copper would cost more.

X Q. 56. Do you know how galvanizing of iron is done?

(Objected to by counsel for complainants as incompetent, irrelevant, and immaterial and not germane to the direct examination.)

Ans. No; I don't know the ingredients, nor nothing like that; I know, of course, how it is done.

X Q. 57. Can you tell, of your own knowledge, what it would cost a manufacturer to galvanize the inside of a cistern and flushing chamber of a closet like Defendant's Exhibit 14?

(Same objection.)

Ans. No; I don't think a manufacturer could do that himself; that would depend on how many they would break; they guess at it.

X Q. 58. Then you don't know anything about what it costs to galvanize?

(Same objection.)

Ans. Only what it costs us.

X Q. 59. What is the difference in the cost to the plumber of a tank galvanized over one not galvanized, both being made of iron?

(Same objection.)

Ans. About a third extra.

X Q. 60. What does an ordinary tank of iron cost, ungalvanized, at wholesale prices, in New York?

Ans. About six dollars.

243 X Q. 61. How large are those tanks which cost six dollars as compared with the Trombe tank, with a cistern above and a flushing chamber below?

Ans. Well, they have not got a flushing tank below; the size would be about 22 inches long, 12 wide, and 12 deep.

X Q. 62. What is the object of galvanizing the tank?

Ans. To keep it from rusting.

X Q. 63. When did you last buy at the same time tanks galvanized and those not galvanized, both made of iron?

(Objected — by counsel for complainant- as incompetent, irrelevant, and immaterial and as foreign to the direct examination.)

Ans. I don't know as I ever bought a galvanized tank in my life of that description. I bought automatic tanks that were galvanized.

X Q. 64. Was there a patent upon them?

Ans. Yes, sir.

X Q. 65. Who made them?

(Objected to as incompetent, irrelevant, and immaterial and foreign to the direct examination.)

Ans. A man named Ivers.

X Q. 66. Was he the patentee or licensee of the patents?

(Same objection.)

Ans. I think he was the patentee himself.

X Q. 67. Did you buy of him any automatic iron tanks not galvanized?

(Same objection.)

Ans. No; he has only the one grade.

X Q. 68. Then your comparison of cost of galvanized tanks over those not galvanized was what you had to pay this inventor for his automatic iron tank over what other iron tanks not galvanized cost, was it not?

(Same objection.)

Ans. No, sir; it had nothing to do with it; we are buying galvanized goods every week, sinks, &c., and I base it on that.

244 X Q. 69. Did you ever buy a galvanized water-closet, except the automatic, which is covered by Ivers' patent?

(Same objection.)

Ans. I never bought a galvanized water-closet in my life.

X Q. 70. Did you ever buy a galvanized iron tank for a water-closet except those you bought manufactured by Ivers and covered by his patent?

(Same objection.)

Ans. I have no recollection of ever buying one except those.

X Q. 71. Then, as a fact, you do not know how much he charged extra on account of a tank being galvanized, do you?

(Same objection.)

Ans. No; he don't sell them any other way than galvanized, and all that he sells are in connection with his water-closets, so far as I know.

X Q. 72. How large are these sinks that you buy that are not galvanized—I mean those made of iron?

(Same objection.)

Ans. I buy them of all sizes, from twelve inches up to six feet, sometimes.

X Q. 73. What would be the cost of an ordinary iron sink which would have a holding capacity of a vessel twenty-two inches long, twelve wide, and twelve deep?

(Same objection.)

Ans. I could not tell that; sinks are not made to hold water at all.

X Q. 74. Take an iron sink intended to hold water, to hold ten gallons, and made plain and not galvanized, what would be its cost at wholesale?

(Objected to by counsel for complainants as incompetent, irrelevant, and immaterial and as foreign to the direct examination.)

Ans. Probably three dollars.

X Q. 75. Now, if the inside were galvanized what do you say it would cost?

Ans. We reckon that it would cost about one-third more.

SAMUEL CLARK.

245 Sworn to and subscribed before me this 17th day of September, 1888.

JNO. E. GAVIN,
Notary Public, N. Y. City.

[SEAL.]

SAMUEL CLARK, the above witness, on reading over his deposition and before affixing his signature thereto desired to amend his answers to X Q. 59 and X Q. 75, so as to read as follows:

X Q. 59.
Ans. About twice as much.
X Q. 75.
Ans. We reckon that it would cost about twice as much, as the tank could not be galvanized inside without being galvanized on the outside at the same time.

JNO. E. GAVIN,
Notary Public.

THOMAS J. TUOMEY, being called as a witness on behalf of the complainant and duly sworn according to law, testified as follows:

Direct examination by Mr. BROWNE:

Q. 76. What is your name, age, residence, and occupation?
Ans. Thomas J. Tuomey; age, 31; 304 East Thirty-first street; place of business, 1238 Third avenue; occupation, plumber.
Q. 77. How long have you been engaged in the plumbing business?
Ans. Well, I have been at the business about 15 years.
Q. 78. Does your business include dealing in water-closets and are you familiar with water-closets?
Ans. Yes, sir.
Q. 79. Are you acquainted with the firm of Henry Huber & Co., of New York city?
Ans. I am.
246 Q. 80. Please state whether or not you are familiar with the so-called "pneumatic" water-closets made and sold by Henry Huber & Co.
Ans. I am.
Q. 81. Please state whether or not you deal or have dealt in any of these pneumatic water-closets of Henry Huber & Co.
Ans. Yes, sir; I have.
Q. 82. Please give the names of such pneumatic closets of Henry Huber & Co. which you have dealt in.
Ans. The Cascade principally. I have used the Tidal Wave.
Q. 83. What is your opinion of the Cascade water-closets made by Henry Huber & Co.?
Ans. I consider it one of the best in the market at the present time.
Q. 84. What water-closet would you recommend to a customer desiring a first-class water-closet?

(Objected to as incompetent and immaterial, as plumbers usually recommend the one in which there is the most profit to them.)

Ans. I would recommend the Cascade as one.

Q. 85. Please state whether or not you have put up any Cascade closets for customers.

Ans. I have; quite a number.

Q. 86. Please state whether or not customers of yours have not complained to you of Cascade closets put in by you for them on account of odors arising from the closet.

Ans. No, sir; I have not heard any complaint.

Q. 87. Please state, if you know, how many water traps or water seals there are in the pneumatic closet of Henry Huber & Co. which you have used between the seat of the bowl and the soil pipe which leads to the sewer.

Ans. To the best of my knowledge there are two—the trap under the floor and the trap in the closet.

Q. 88. What, in your opinion, is the likelihood of gases from the sewer getting by these water seals or traps?

(Objected to as incompetent.)

Ans. The chances are very slight of any sewer gas getting past those seals into the room.

247 Q. 89. How many water seals or traps, such as are used by plumbers, would, in your opinion, be sufficient to prevent the passage of gases from the sewer?

(Objected to as above.)

Ans. One, if the soil pipe was properly ventilated.

Q. 90. Please state whether or not it is usual for plumbers to ventilate the soil pipe.

(Objected to as irrelevant and immaterial to any of the issues of this case.)

Ans. It is.

Q. 91. How long a time should the tank for a water-closet last without requiring repairs?

Ans. Well, the tank itself should last for at least ten years. Of course the leathers on a tank may want renewal, but the tank itself should last ten years if properly made.

Q. 92. How long should the valve leathers last?

(Objected to as indefinite, uncertain, and as incompetent, since it is manifested that the lasting quality of valves is dependent upon many conditions not predicated in the question.)

Ans. Well, with ordinary usage they should last three or four years at least.

Q. 93. What would you think of a tank which would get out of order in less than six months?

(Objected to as irrelevant and immaterial.)

Ans. Well, I would consider it defective.

Q. 94. Please state whether or not it is desirable or necessary for a water-closet tank to have an overflow device or means for carrying off water in case it should rise too high in the tank.

(Objected to as irrelevant and immaterial.)

Ans. I consider it an absolute necessity, an overflow pipe to the tank.

Q. 95. What would you think of a water-closet tank put upon the market without any overflow device?

Objected to as irrelevant, incompetent, and immaterial to any of the issues of this case. Any tyro in plumbing would have
248 sense enough to attach an overflow pipe if such were desired, and neither Boyle nor Peters & Donald were the first to suggest or claim such a thing as an invention; therefore the straw man now being set up by complainant- is an idle attempt to dodge the real issue involved in this litigation.

Counsel for complainant- states that the tyro who has made such a tank and made estimates on the cost of such a tank, and who has claimed under oath that such a tank was a perfect and operative tank, is no other than defendant's own expert, called as a witness in this case.

Counsel for defendant says, nevertheless, the tank so made by Peter White and designated as Defendant's Exhibit 14 is an exact similitude of the construction shown, described, and claimed in the Peters & Donald patent, which the complainant- has sued the defendant for infringing and for the construction of which they seek to recover profits and damages, and the other patent involved in this case, to wit, Boyle's reissue, does not claim an overflow pipe as one of the elements in the combination in any of the claims which complainant- has stated defendant infringes. Hence, whether an overflow pipe is necessary or unnecessary is not involved in this issue.

Counsel for complainant- further states that defendant's witnesses have undertaken to institute comparisons between the price of complainants' Trombe tanks and tanks made in accordance with the Peters & Donald patent, and that the overflow devices in complainants' tank were considered by defendant's witnesses in estimating the cost thereof.

249 Statement of counsel objected to by counsel for defendant because the testimony of the witness referred to is of record and is the only and best authority as to what the witness stated.

Ans. Well, I would not consider the tank complete. I would not like to use it.

Q. 96. Please state, if you can, which would be the more expensive of two tanks in all other respects the same except that one tank was made of wood, lined with copper, and the other tank was an ordinary iron tank, neither an enamelled or a galvanized tank.

Ans. The copper tank.

Q. 97. Which would be the superior tank of the two?

Ans. The copper tank.

Q. 98. In what respects and why would the iron tank be inferior?

Ans. Well, in the first place, the durability; the copper tank would outlast the iron tank, and if you look at it in a sanitary light, I consider the copper tank far superior, for the iron tank becomes foul and clogged up.

Cross-examination by Mr. TAYLOR:

X Q. 99. Did you ever make a tank like Complainants' Exhibit Trombe Tank, now shown you?

Ans. I have made plain wooden tanks and lined them with copper.

(Counsel for complainants objects to both question and answer as incompetent, irrelevant, and immaterial, and not germane to the direct examination, it not having been shown that the witness ever was engaged in the manufacture of water-closet tanks or anything else connected with the plumbing business.)

X Q. 100. When and where did you make such tanks?

(Same objection.)

Ans. I have made them at different times. I have made them in my shop.

X Q. 101. When did you last make such at your shop?

250 (Same objection.)

Ans. Within a year. I did not make them with my own hands within a year, but I have had them made. I have, however, made them.

X Q. 102. Were those that you had made within a year made in all respects identical with the Trombe tank?

(Same objection.)

Ans. No, sir; they were nothing like the Trombe tank. They were simply a plain wooden tank lined with copper and had none of the connections of a Trombe tank.

X Q. 103. Were those you made intended for siphon water-closets and used in connection with siphon water-closets?

(Same objection.)

Ans. No, sir; they were not.

X Q. 104. Did you ever make or have made at your shop or factory a tank for a water-closet exactly like Complainants' Exhibit Trombe Tank?

(Same objection.)

Ans. No, sir.

X Q. 105. Then, of your own knowledge, you cannot state the exact cost of such a tank, can you?

(Same objection.)

Ans. No, sir; not exactly.

X Q. 106. Have you ever seen the interior of the flushing chamber of a tank like Complainants' Exhibit Trombe Tank?

(Same objection.)

Ans. Do you mean by the flushing chamber the service box?

X Q. 107. Yes; I mean the part below the cistern, whether you call it a flushing chamber or service box. Boyle, in his patent, calls it a flushing chamber.

(Objected to by counsel for complainant- as incompetent, irrelevant, and immaterial, as foreign to the direct examination, and for stating what Boyle calls the service box in his patent, the patent itself being the best evidence as to what it is called.)

Ans. I have never seen the interior of a Trombe tank service box, but I have seen the interior of others.

251 X Q. 108. What one did you see the interior of?

(Objected to by counsel for complainants as incompetent, irrelevant, and immaterial, and foreign to the direct examination.)

Ans. An ordinary service box that I would make myself, and I have seen the interior of an ordinary iron-tank service box.

X Q. 109. Did you ever set up a Trombe tank?

Ans. Yes, sir.

X Q. 110. If so, with what closet?

Ans. In connection with the Cascade closet.

X Q. 111. State, if you please, which has the larger opening, the cistern which holds the water supply or the flushing chamber or service box which lets the water into the flushing pipe. I mean for letting the water out of the valves.

(Objected to by counsel for complainants as incompetent, irrelevant, and immaterial, and as foreign to the direct examination and as vague and uncertain.)

Ans. The inlet from the cistern to the service box is a great deal larger than the outlet from the service box to the closet; the valve from the cistern is about four inches and the outlet from the service box about an inch and a quarter.

X Q. 112. What, if any, useful function is accomplished by having a cistern with a flushing chamber under it with the opening for the supply of water to the flushing chamber so much larger than the outlet from such flushing chamber?

(Same objection.)

Ans. By that they get what we term the after-wash—that is, after the valve is closed there is a certain amount of water remains to fill the bowl, and which we call the after-wash.

X Q. 113. What is the use of that?

(Same objection.)

Ans. To form a seal so that the sewer gas won't enter the room.

X Q. 114. State whether you regard that as an essential feature of the tank.

252 (Same objection.)

Ans. Yes, sir; I do.

X Q. 115. Did you ever make an iron tank like Defendant's Exhibit 14, now shown you?

(Same objection.)

Ans. No, sir.

X Q. 116. Can you state of your own knowledge the cost of such a tank with the connections, as shown here?

(Same objection.)

Ans. I could not give the exact cost. I could give an idea, though.

X Q. 117. You never was connected with a factory that made such tanks, were you?

(Same objection.)

Ans. No, sir.

X Q. 118. What effect has the galvanizing of iron upon it where the vessel is intended to hold water?

(Same objection.)

Ans. It has a tendency to preserve it for a short while, but it will rust after awhile, though.

X Q. 119. State what the pipes are made of through which the water is furnished to the city of New York, if you know it.

(Same objection.)

Ans. They are made of cast iron coated with tar.

X Q. 120. What is the object of putting tar on them?

(Same objection.)

Ans. To preserve them, I presume.

X Q. 121. How is the tar put on—hot?

(Same objection.)

Ans. I presume so. I have never seen them do it.

X Q. 122. Does that prevent rust?

(Same objection.)

Ans. To a certain extent—that is, for a short while.

X Q. 123. For how long a time?

(Same objection.)

Ans. I could not say exactly. I have seen the pipes covered with rust, but I could not say how long they had been in use.

253 X Q. 124. Fifty years?

(Same objection.)

Ans. I hardly think it was half that.

X Q. 125. State for how many years you have been accustomed to seeing overflow pipes in the tanks of water-closets.

Ans. From the time I first went at the business; the first time I ever took notice of a tank; about fifteen years.

X Q. 126. What would be the cost if the cistern marked Defendant's Exhibit 14 had been cast with an opening a little below its top to attach an overflow pipe to have connected that pipe with the flushing pipe below the tank made of proper material for an overflow pipe?

Objected to by counsel for complainants as being purely hypothetical, as referring to a construction, so far as it appears, as having never been adopted by defendants or any one else, and for the further reason that the cross-examination of this witness shows that he has never seen Defendant's Exhibit 14 prior to this examination and is not familiar therewith, so that this witness does not know whether or not such hypothetical construction would interfere with the operation of the tank, and for the further reason that the question is incompetent, irrelevant, and immaterial and foreign to the direct examination.

Ans. To the best of my knowledge, it would be a trifling cost; fifty cents ought to cover it if it was originally made that way.

X Q. 127. Then, in your judgment as a plumber, by so altering the pattern for the cistern for Defendant's Exhibit No. 14 so as to leave an opening a little below the top thereof, to which, say, a lead overflow pipe could be attached and carried down below the bottom of the tank and there connected to a flushing pipe, would not add exceeding fifty cents to the cost of the tank?

(Same objection.)

254 Ans. No—that is, if the overflow was made of cast iron When you speak of attaching that to a lead pipe it would be necessary to have a brass coupling or some other device that would make it cost more.

X Q. 128. How were overflow pipes arranged with the ordinary tanks years ago?

(Objected to as incompetent, irrelevant, and immaterial and as having no bearing on the direct examination.)

Ans. With a stand pipe in connection with the service box.

X Q. 129. How was it where there was no service box?

(Same objection.)

Ans. Where we don't use a service box we have a stand pipe attached to the valve—that is, the upper spindle of the valve is formed out of a tube or pipe.

X Q. 130. Mr. Tuomey, there are various ways by which an overflow pipe may be connected with a cistern and then with the flushing pipe, so as to prevent an overflow of water from the cistern?

(Same objection.)

Ans. There are two ways of doing it: One is by a stand overflow, and the other is by attaching to the side or any other place.

X Q. 131. Any plumber of ordinary skill would know how to attach an overflow pipe, would he not?

(Same objection.)

Ans. He would, but not to an iron tank.

X Q. 132. Why not?

(Same objection.)

Ans. For the simple reason that in cutting a hole in a cast-iron tank it would be likely to break it.

X Q. 133. Would not any manufacturer of iron tanks, when informed of the advantage of overflow pipes, readily see how the proper openings could be cast in the tank for the overflow pipe?

(Same objection.)

Ans. I should think so if he would study his own interests.

X Q. 134. What is the cost of a small-sized brass coupling?

255 (Same objection.)

Ans. Do you mean an ordinary brass coupling? A one-inch brass coupling would be worth about fifty cents.

X Q. 135. Are you a customer of Mr. Huber's?

Ans. I am.

X Q. 136. Do you buy of him largely per month?

Ans. That would depend entirely on the class of work that I was doing.

X Q. 137. For the last three or four months have you bought largely of his firm?

Ans. No, sir; the last three or four months I think $300 would cover my purchases.

X Q. 138. Take the year before that, would your purchases be large?

Ans. For the last eighteen months they were not very large; I should judge about $1,200.

X Q. 139. How much for the eighteen months previous to that?

Ans. I could not say exactly. I should say about $2,000.

X Q. 140. Are your purchases of Henry Huber & Co. all for siphonic water-closets?

Ans. No, sir.

X Q. 141. What part of your purchases were for siphonic water-closets?

Ans. To the best of my knowledge, about one-half or thereabouts.

X Q. 141½. Do you purchase for cash or credit from Henry Huber & Co.?

Ans. Cash; I very seldom ask for more than thirty days.

THOS. J. TUOMEY.

Sworn to and subscribed before me this 7th day of September, 1888.

JNO. E. GAVIN,

[SEAL.] *Notary Public, New York County.*

Adjourned by consent until Saturday, September 8th, 10 a. m., at the same place.

256 NEW YORK CITY, *Sept. 8th*, 1888.

Met pursuant to adjournment.
Present: Same parties as before.

HENRY MORTON, being called as a witness on behalf of the complainant, and being duly sworn according to law, testified as follows:

Direct examination by Mr. BROWNE:

Q. 142. What is your name, age, residence, and occupation?
Ans. Henry Morton; 51 years of age; residing in Hoboken, N. J; president of the Stevens Institute of Technology in that place.
Q. 143. Please state what experience you have had in scientific pursuits. State also whether or not you have had any experience in reading and comparing letters patent, and whether or not you have heretofore testified in patent causes, and how frequently.

Objected to as incompetent, irrelevant, and immaterial, so far as it calls for the number of times the professor has testified in patent causes.

Ans. For nearly thirty years my time has been entirely devoted to scientific pursuits, involving many scientific investigations, the results of which have been published in the scientific journals of this country and of Europe. During the last fifteen years I have been called upon to give testimony in at least a hundred different cases involving patents.

The answer of the witness, so far as it relates to investigations by him, the results of which have been published, is objected to on the ground that the publications referred to are the best evidence and have not been offered in evidence, and is irrelevant, incompetent, and immaterial.

Q. 144. Please state what has been and is your familiarity with the science of hydraulics and pneumatics and the application thereof in the arts.

257 Ans. I studied these subjects when at college, nearly thirty years ago, in the University of Pennsylvania and for many years subsequently delivered lectures on the same in the Franklin institute, of Philadelphia, where I was professor of mechanics. I also lectured on these subjects in the University of Pennsylvania, where I occupied the chair of chemistry and physics, and when resident secretary of the Franklin institute I had occasion to examine and report upon various machines involving hydraulic and pneumatic principles. About 1868 I made an investigation of the famous Giffard injector and prepared and published the first complete explanation of that apparatus. About a year later, when the ejector condenser of Alexander Morton, of Scotland, first appeared, I also made an examination and prepared and published the first explanation of that apparatus. During the last seventeen years, since I have occupied my present position, I have regularly lectured on the

subjects of hydraulics and pneumatics and have had occasion to investigate various forms of apparatus involving the application of hydraulic and pneumatic principles.

Q. 145. Have you read and examined letters patent of the United States to Peters & Donald, No. 260,232, and reissued letters patent granted to James E. Boyle, No. 10826, sued on in this case, and do you understand the same and the construction and mode of operation of the several forms of apparatus therein shown and described and the results which would be accomplished by the several forms of apparatus when properly constructed?

Ans. I have read and carefully examined the patents referred to and believe that I fully understand the structure and operation of the various forms of apparatus therein described and the results which would be obtained from the use of such apparatus when properly constructed and operated.

Q. 146. Please state the principles which govern and determine the creation of a vacuum by the means and appliances shown in the Peters & Donald patent, No. 260,232, and please state what
258 are the principles and the conditions which determine the creation of a vacuum by the means and appliances shown in the Boyle reissue patent, No. 10826.

Objected to by counsel for the defendant on the ground that the testimony sought is not rebutting testimony, but is only cumulative of the kinds and character of testimony which plaintiffs adduced in chief and which was necessarily a part of plaintiffs' case in chief, and counsel now gives notice that if such testimony is persisted in they will *either* move to have the same expunged; also for leave of court to take additional testimony in behalf of the defendant.

Ans. The principle involved in the Peters & Donald apparatus for producing a vacuum is, briefly, this: When a vessel full of water in an elevated position is connected with a vertical pipe from its lower part and is otherwise closed there will be a tendency for the contained water to flow out, such tendency being proportionate to the height of the upper surface of the contained water above the lower end or outlet of the vertical pipe. This tendency to flow out would be resisted by the atmospheric pressure, which is equal to a column of about thirty-four feet in vertical height of water. If, therefore, the supposed vessel were absolutely closed, except for this outlet pipe above mentioned, no water could flow out unless the surface of the water in the vessel were more than thirty-four feet above the level of the lower end or outlet of the vertical pipe. If, however, the upper portion of the enclosed vessel is connected with any enclosed air space, then the tendency of the water to flow down under the influence of gravity will cause a portion of the air from such air space to be drawn into the closed vessel, thus producing a rarefaction of the air within such enclosed space, which rarefaction will be primarily proportioned to the height of the upper surface of the water in the vessel above the lower end of the outlet pipe. For example, suppose that this distance was eight feet, then the tend-

(Here follows diagram marked p. 259.)

No. 143.
Huber et al.
v.
N.O. Nelson Mfg. Co.
} p. 259

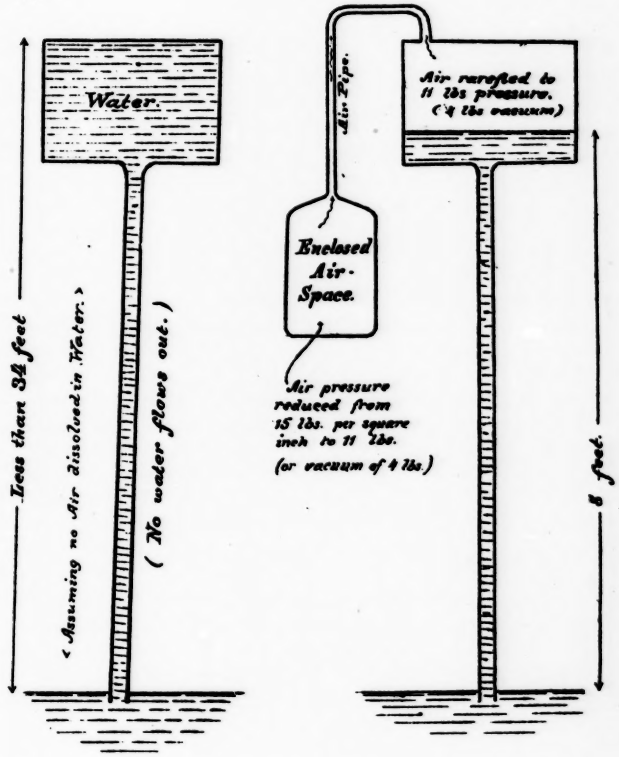

260 ency to rarefy the air or to diminish its initial pressure would be proportional to a column of water of eight feet in height, or, in other words, if the initial pressure in the enclosed space was that of the ordinary atmosphere, viz., 15 pounds to the square inch, it would tend to be reduced in the case cited to eleven pounds, or, to use a common form of expression, a vacuum equal to 4 pounds would tend to be produced by the downflow of the water from the elevated vessel. Another action or condition, however, must be considered, and it is in view of this that I have used the qualifying expression "tendency" in my previous description. What I now refer to is this: As the water from the elevated tank or vessel flowed out its level or the height of its upper surface would manifestly decrease and therefore the height which I have above referred to between this level and the outlet of the vertical pipe would be continually decreasing; therefore the exact diminution of pressure finally obtained in the enclosed air space could only be measured or determined from the height of water referred to when this had fallen to its final level. The distance to which it would fall moreover would depend upon the relative capacities of the closed tank or vessel containing the water and the enclosed air space, the larger relatively the volume of the enclosed air space the lower would be the level to which the water from the closed tank would fall. Having these various points in mind, however, we have before us all the principles involved in the action of such an apparatus when used to produce a vacuum, these being, to recapitulate briefly, the height of the vessel or rather of the water level in the vessel above the outlet and the relative volumes or capacities of the vessel and the inclosed air space from which air is to be removed.

Passing next to the apparatus for producing a vacuum, shown in the reissued Boyle patent, the principle involved in that structure is that of a certain form of aspirator first illustrated, as regards its form of structure, in the "trompe" used in very ancient times in the apparatus for the production of wrought iron, known as
261 the Catalan forge, and developed in more modern times in the well-known Bunsen filter pump used in chemical laboratories. In this apparatus a jet of water, moving with high velocity into and through an enlarged or larger pipe, carries forward with it, partly by friction and partly by mechanical propulsion, a quantity of air admitted into the larger pipe by some convenient form of inlet. The principle upon which this apparatus operates is primarily this: A jet of water, moving with high velocity, drags with it by friction and catches and entangles in small masses or bubbles air through which it may be passing, and if this action takes place within a tube the action will be one of exhaustion or a tendency to produce a vacuum in a connected enclosed space. In this apparatus the primary cause of the vacuum production is the velocity of the flowing jet of water, and the degrees of vacuum produced in a properly constructed apparatus will depend altogether upon this in the first instance, though, of course, it will be influenced by the capacity of the vessel or enclosed space from which the air is drawn, the time during which the action is continued, and within certain limits

the size of the aspirator or nozzle through which the water jet passes and that of the surrounding tube.

Q. 147. Please examine Defendant's Exhibit No. 14 now shown you and state whether or not you have previously examined it. And, if so, when, where, and under what circumstances?

Ans. I recognize the apparatus as the same which I examined and saw in operation on the 6th of this month at the factory of Henry Huber & Co., at the corner of One hundred and thirty-sixth street and Mott avenue, New York city.

Q. 148. Describe, if you please, in what manner this tank was set up when you saw it in operation, and also describe how it operated.

Ans. This tank was supported against a brick wall at the height of seven feet three inches from the bottom of the tank to the floor of the room. It was connected with a water supply and with a water-closet bowl of the pattern known as Cascade, beneath which
262 there was also a trap in addition to the trap forming an integral part of the bowl. A connection was also made between the air space enclosed between these two traps and the pipe on Exhibit 14 corresponding to that marked 5 in the Peters & Donald patent. These connections being all made, the water from the city main was turned on and allowed to fill the box until finally (after some little delay from looseness in the ball cock) shut off by the automatic action of the float. I then operated the apparatus a number of times by pulling a cord attached to the lever arm corresponding to that marked 10 on the Peters & Donald patent. I found that it required that the lever should be pulled or held down for about thirty-five seconds in order that the lower tank or service box should empty itself and that the after-wash lasted from about a minute to a minute and a quarter. The flushing action under these conditions was efficient, though rather sluggish; in other words, there was at no time a very rapid or energetic flushing, the best action being immediately after the lever was pulled, after which the action was relatively feeble. The amount of water determined by measurement delivered by the flushing box was about five and two-thirds gallons.

Q. 149. State what force, if any, was required to operate the lever of Defendant's Exhibit No. 14 corresponding to the lever marked 10 in the Peters & Donald patent, No. 260,232, and to hold the same during the continuance of the outflow of the water from the lower chamber or service box.

Ans. Quite a sensible exertion of force was needed to hold this lever, but I did not measure it so as to be able to express it in pounds or other positive units.

Q. 150. What would be the conditions determining the force required to pull this lever and to hold it open during the emptying of the service box?

Ans. Aside from the friction of parts the force required to hold the lever down at its outer end would depend mainly on the area of the valve corresponding to that marked 11 on the Peters & Donald

patent and the degree of vacuum produced in the service
263 box. The larger the valve and the greater the vacuum the more would be the force required to hold the lever.

Q. 150½. Please examine Complainants' Exhibit Trombe Tank now shown you and state whether or not you have previously examined it; and, if so, when, where, and under what circumstances.

(Objected to by counsel for defendant as incompetent, irrelevant, and immaterial.)

Ans. I examined this tank and saw it in operation also on the 6th of this month at the factory of Henry Huber & Co.

Q. 151. Please state how it was set up when you saw it in operation, and also how it operated.

Ans. This tank was set up in exactly the same place as the tank Defendant's Exhibit 14 and was connected with the same bowl in the same way—that is, the outlet of the flushing box was connected to the flushing rim of the bowl and the exhaust air pipe was connected with the space between the trap of the bowl and the plumber's trap below the floor. A connection for water supply was likewise made with the cock controlled by the float and the box was filled until such cock was automatically closed by the action of the float. On pulling the chain connected with the operating lever of this apparatus and holding the same down for about three seconds the operation was initiated and continued itself until complete. The flushing was in this case much more energetic than with the previous apparatus and seemed to increase in energy till near the end, when it promptly ceased and an after-wash took place.

I placed a sheet of tissue paper over the wetted rim of the bowl and was thus enabled to observe that the amount of air taken out of the bowl was manifestly in excess of that brought into it. In fact, while the sheet of paper was only slightly raised into a convex form at the outset by the inflow from the flushing pipe, it was very greatly depressed later on by the siphon action of the flushing water.

Q. 152. Please state whether or not the pipes connecting the rim and air space of the water-closet bowl with the tank above
264 were the same when the Peters & Donald tank, Defendant's Exhibit No. 14, and Complainants' Exhibit Trombe Tank were set up when you saw the same in operation.

(Objected to as incompetent, irrelevant, and immaterial.)

Ans. They were the same.

Q. 153. Please state whether or not you timed the period required to refill the bowl when Complainants' Exhibit Trombe Tank was in operation.

(Same objection.)

Ans. To the best of my recollection it was about twenty-five seconds.

Q. 154. What conclusion would you draw as to the disposition of the air in the water-closet bowl and the parts in connection there-

with from the experiment you have described with the tissue paper?

Same objection by counsel for defendant; the question is also objected to because it calls upon the witness to perform the functions which the court only can perform.

Ans. My conclusion is that the disturbance or distribution of air would be of little or no practical importance, but so far as any effect was produced it would be a good one, since it would tend to leave the bowl filled with fresh air.

Q. 155. Please examine the water-closet tank now shown you and state whether or not you have previously examined it; and, if so, when, where, and under what circumstances.

Objected to as irrelevant, incompetent, and not in the nature of rebutting testimony; the tank now pointed out for witness to examine is one not hitherto testified about by any witness in the case nor made an exhibit, and notice is now given that if said tank is made an exhibit or this or any other witness is permitted to testify concerning the same that the defendant will claim the right
265 to adduce evidence of witnesses tending to meet and rebut any testimony given in relation thereto.

Ans. I examined this tank and saw it in operation on the 6th of September at the factory of H. Huber & Co., where it was placed in exactly the same position as the other tanks to which I have heretofore referred and connected by the same pipes with the same bowl and the same inclosed air space between the two traps, as also the same water supply. It operated substantially like the tank Defendant's Exhibit 14, with the exception that the flushing operation was not quite so long, the capacity of the flushing chamber being only about three gallons, while the other one was five and two-thirds gallons. As with Exhibit 14, it was necessary to hold down the lever throughout the duration of the flushing action, and this flushing action was relatively feeble and stronger at the beginning than at any other time.

The tank referred to in this question and answer is hereby offered in evidence by counsel for complainants and is marked Complainants' Exhibit No. 19, Peters & Donald tank.

Counsel for defendant objects to said tank being admitted in evidence at this stage of the examination and as not legitimate rebutting testimony and here gives notice that counsel will insist on taking additional testimony in behalf of the defendant concerning said tank as to any evidence that may be given by plaintiff relating to said tank.

Q. 156. Please examine the water-closet tank now shown you and state whether or not you have previously examined it; and, if so, when, where, and under what circumstances.

The tank here shown witness is hereby offered in evidence by

counsel for complainant and is marked Complainants' Exhibit No. 20, single-charge injector tank.

266 Counsel for defendant objects to the admission of said tank in evidence at this stage of the case as irrelevant, incompetent, and as not rebutting testimony, it not having been introduced in evidence heretofore, nor defendant's witnesses having had an opportunity to examine the same; and notice is now given that counsel for defendant will insist on the right of introducing testimony touching said tank and explanatory of any testimony complainants may adduce concerning said tank. Counsel also objects to the last question as irrelevant and incompetent as not in the nature of rebuttal.

Ans. I examined this tank and saw it in operation on September 6th at the factory of H. Huber & Co.

Q. 157. Please state when this tank was set up and in operation and how it operated.

(Objected to by counsel for defendant for reasons heretofore given.)

Ans. This tank was set up and connected in the same place, in the same way, and with the same tubes as the tanks previously described. On holding down the lever for one or two seconds the flushing operation began and continued for about twenty seconds, being in character substantially like that of Complainants' Exhibit Trombe Tank. Like this exhibit, it showed a vigorous action and an efficient after-wash. In this apparatus the flow of water constituting the flushing action is controlled by a sort of siphon valve, which has the effect of a slow-closing valve. The initial raising of this valve causes a rush of water which starts the operation of the siphon within it, which siphon then continues to deliver water to the injector or aspirator immediately beneath the tank by which a vacuum is produced between the two traps, as in the like forms of apparatus previously described.

Q. 158. Please state whether or not you have examined a plumber's lead trap, such as is ordinarily placed between a water-closet

267 bowl and the soil pipe leading to the sewer; and, if so, whether or not you have measured the water-holding capacity of such a trap.

Ans. I have examined and measured such a trap and find that when filled, as it ordinarily is in use, its capacity or the water which fills its bend is about three pints.

Q. 159. Please state what the gases are which are ordinarily known as sewer gases and which will be generated from excreta, such as ordinarily pass through a water-closet, and also please give the different specific gravities or weights of such gases as compared with that of atmospheric air.

Ans. The gases which have been recognized and identified are sulphuretted hydrogen, ammonia, and light carburreted hydrogen, otherwise called marsh gas. While I do not recall their exact densities, I do recollect clearly that they are all much lighter than air, so that all of them can be readily collected by upward displace-

ment. In other words, if we wish to fill a jar with one of these gases we can readily do so by holding a jar bottom upwards over an outlet from which one or other of these gases is escaping, whereupon the gas will flow upward into the jar, displacing or pushing downward the air which it before contained.

Q. 160. Please state how readily gases will diffuse or become diffused provided such gases are confined or obliged to pass through ordinary plumbers' pipes varying, say, between one-half inch and one and a half inches in diameter.

Ans. The rate of diffusion of gases through pipes of the smaller size mentioned by you is, as I know by actual experiment, exceedingly slow, so that, even with gases varying greatly in density and under conditions favoring diffusion, such diffusion will only reach a few feet in the course of a week. If the pipe had a clear aperture of the larger size mentioned by you the diffusion would be proportionately more rapid, but even then in a direction opposed to the effects of gravity would be quite slow.

268 Q. 161. Please state whether or not devices for creating a rarefaction of air, such as the vacuum chamber shown in Defendant's Exhibit No. 14 and of the character such as is shown in Complainants' Exhibit Trombe Tank, could be used interchangeably or at will, disregarding the elements of mechanical construction which would be necessary to adapt them for the different purposes for which they might be desired to be used.

Ans. Though there are undoubtedly some cases in which one of these methods could be used in place of the other, there are a vast number of others in which they could not be so used. Thus the first-mentioned method, or that of the Peters & Donald patent, could not be used for filter pumps nor for any other application in which it was necessary to obtain a high degree of exhaustion and to maintain the same continuously for some time; so again the injector or Trombe apparatus could not be used where there was not an abundant supply of water under high pressure, though under exactly these conditions the vacuum-producing apparatus of Peters & Donald, or its precise equivalent, could be used with the best effect. For example, the aspirator commonly employed in chemical laboratories and in mete-reological observatories operates on precisely the same principle as the vacuum-producing apparatus of Peters & Donald, but requires no supply of water under pressure, nor indeed any water except that with which the apparatus is filled once for all to start with; being then turned over from time to time like an hour-glass, it will act continuously as a means of exhaustion or producing a partial vacuum.

The last question and answer are objected to as incompetent, irrelevant, and immaterial.

Q. 162. Could you tell positively or with a reasonable degree of certainty whether or not in a particular case and in a particular construction in which a means for creating the rarefaction of air such as that shown in Defendant's Exhibit No. 14 had operated suc-

cessfully another means for producing a rarefaction of air,
269 such as the injector shown and used in Complainants' Exhibit Trombe Tank, under substantially the same conditions of height and quantity of water, would operate successfully without making any experimental tests?

(Objected to as incompetent, irrelevant, and immaterial.)

Ans. I think it would be entirely impossible to make with any certainty such a prediction as your question implies, there being a great number of elements of uncertainty which would enter into the problem. One of these, for instance, would be the well-known fact that in the apparatus used to produce exhaustion in the manner of what has been called here an injector, such, for example, as the Bunsen filter pump, the exhaustion is very slow, and therefore, prior to experiment, I should entertain considerable doubt whether the action would be sufficiently prompt to secure the result obtained by the Peters & Donald method.

Q. 163. It is a well-known fact, I believe, that in case of a difference of temperature between the air within a building and the outside air exterior to the building a draft of air will be created through openings between the interior of the building and its exterior in a direction depending upon whether the air within the building is at a lower or higher temperature than the air exterior to the building. Please state how rapid and how energetic a draft of air would be created by such differences in temperature through ordinary plumber's pipes, varying between one-half inch and one inch and a half in diameter, opening at one end in the interior of the building and at the other end into the exterior air, assuming that such pipes were of a length exceeding, say, ten feet?

(Objected to as incompetent, irrelevant, and immaterial; also as containing a statement of counsel as to facts and as being leading.)

Ans. Every one who has lived in a house with open fireplaces has undoubtedly noticed the fact of a moderate up draft when the exterior air is cold and a similar down draft, causing one to
270 perceive the sooty smell of the chimney when the weather suddenly becomes warm; but even under the favorable condition of a large chimney flue forty or fifty feet high these drafts are very feeble, and under the unfavorable condition of a relatively small plumber's pipe, in most cases having many bends in it, the velocity of such air currents would be correspondingly small.

Adjourned by consent until Monday, September 10th, at ten o'clock a. m.

NEW YORK, *Sept. 11th*, 1888.

Direct examination of Prof. HENRY MORTON continued by Mr. BROWNE:

Q. 164. Please state, if you can, the relative densities of the gases commonly known as sewer gases as compared with atmospheric air.

Ans. The densities of the various gases to which I have already

alluded as being commonly supposed or known to exist in sewer gas are given as follows by the distinguished chemist Bunsen in his work entitled Gasometry:

Air	1.0000
Ammonia	0.5896
Marsh gas	0.5531
Carbonic oxide	0.9674
Sulphuretted hydrogen	1.1776

I notice from these figures that I was before in error in stating that sulphuretted hydrogen was lighter than air, as it appears from the above table that it is slightly heavier than air. This error does not, however, affect my previous conclusions, because this would only be one of the gases present in sewer gas, and its slightly greater density would be abundantly compensated by the very low densities of the other gases found with it.

Q. 165. Please state the properties of these sewer gases that you have named as regards their solubility in water.

271 (Objected to as incompetent, irrelevant, and immaterial.)

Ans. Ammonia is extremely soluble in water, water taking up, as I recollect, about seventy times its volume of this gas—that is, one cubic inch of water would dissolve or absorb into itself seventy cubic inches of ammonia gas. Sulphuretted hydrogen is likewise very soluble in water, though not so much so as ammonia, water taking up, as far as I recollect, three or four times its volume of this gas. The other two gases mentioned, marsh gas and carbonic oxide, are only slightly soluble in water.

Q. 167. How would the rapidity of the absorption of these gases in water be affected by their being mingled with water in a sprayed or divided condition?

Ans. It would be greatly increased.

Q. 168. Assume that a Peters & Donald tank, such as Defendant's Exhibit No. 14, and an injector tank, such as Complainants' Exhibit Trombe Tank, should be set and properly connected at the conventional height for setting such tanks. Then assume that both tanks should be set and properly connected at a greater height, say two feet greater, than the conventional height. Then assume that both tanks should be set and properly connected, say two feet, below the conventional height. Under these conditions, which tank in its operation would be the more affected or disturbed? And state the reasons for your conclusions.

(Objected to as vague, incompetent, irrelevant, and immaterial.)

Ans. Under the conditions of your question the Peters & Donald tank would be much more affected by a change of elevation than the other, because the action in its case, depending directly upon the difference in level between the surface of the water in the flushing tank and the orifice by which it escapes from the lower end of the flushing pipe, would experience the full effect of these changes

of level. The other tank, however, depends for its action on the velocity with which the water escapes through the aspirator
272 attached to the bottom of the tank, and this velocity would not be directly affected by the changes in elevation of the tank to which you refer. Such indirect action as these changes in level might have upon the velocity of the escaping water would be so modified by the admixture of air drawn from the inclosed space between the traps that their influence would be greatly reduced, and therefore the general result would be relatively much less affected in this latter case by the change in elevation than it would be in the former case, viz., that of the Peters & Donald tank.

Cross-examination by Mr. REX:

X Q. 169. Are you a practical mechanic, Professor?

Ans. To the extent of having done a great deal of mechanical work with tools and machines in my own hands I am. In former years I constructed for myself many pieces of apparatus which I used in my lectures or investigations and built for myself the turning lathe on which I did much of my work. Of late years I have not had time to do much work to any extent with my own hands, but for several years I carried on the business of manufacturing philosophical instruments, the work being done by mechanics under my direction and superintendence,

X Q. 170. Have you had any experience in the manufacture or construction of water-closets?

Ans. I have not.

X Q. 171. Ever been in the water-closet business or the plumbing business?

Ans. I have not.

X Q. 172. You testified that in 1868 you published an article on the subject of the Giffard injector, explaining its operation and construction. Can you state what the laws are governing the operation of injectors and the rules governing their construction? If so, please do so.

(Objected to as incompetent, irrelevant, and immaterial.)

273 Ans. The term injector has been used in reference to a great variety of forms of apparatus, and, in fact, this variety is so great that I do not think it would be possible to give one set of laws governing the action of all of them. In reference to that form known as the Giffard injector the general law of action is that the amount of water carried into a steam boiler by a given injector will vary primarily directly as the square of the velocity of the escaping steam and inversely as a function of the temperature of the feed-water. The exact details and experimental verification of these laws will be found in the articles published by me in the Journal of the Franklin Institute and reprinted in several foreign journals and in an article by Prof. Combs, who was connected with one of the great government schools in France and who has published a purely mathematical discussion of this subject. The law governing the

action of injectors or aspirators of the type shown in the reissued Boyle patent is, in substance, that with a given injector the amount of air exhausted will vary with the square of the velocity of the water jet, modified, however, from time to time by the density of the air in the exhausted reservoir, but where there are considerable differences in the form of the injectors or aspirators very various results will be obtained which it would be impossible to reduce into the form of any general law. A good discussion of certain forms of such aspirators with the statement of results attained in their practical use by Prof. Richards, of the Massachusetts Institute of Technology, will be found in the London Chemical News for 1869.

X Q. 173. How long have the laws you have enumerated been known?

Ans. From eighteen to twenty years.

X Q. 174. When you examined the water-closets erected at complainants' place of business did you measure the height of the bridge between the bowl and the flushing pipe?

Ans. I did not.

X Q. 175. Was the Trombe tank which you there saw in operation the one marked Complainants' Exhibit Trombe Tank or a similar one to it?

274 Ans. It was the one marked complainants' exhibit.

X Q. 176. Will you please state whether or not the tank you have just referred to contained all the parts shown in Fig. 1 of reissued patent 10826 sued on in this case?

Objected to as incompetent, irrelevant, and immaterial, the patent and the tank themselves being the best evidence of their identity or difference.

Ans. As I understand it, it contains all the parts, there being simply this difference, that a fixed overflow is provided in Complainants' Exhibit Trombe Tank in place of the overflow within the stem *m* of the valve *h*, shown in Fig. 1 of the patent.

X Q. 177. It included, then, the flushing tank F, bell N, pipes E and T, did it not?

(Same objection.)

Ans. As I did not take the apparatus apart, I am unable to say in reference to the exact construction of this portion of the apparatus, but it contained what appear on the outside to be parts corresponding to those mentioned by you.

X Q. 178. Who put up Defendant's Exhibit No. 14 before you saw it in use?

Objected to as incompetent, irrelevant, and immaterial.

Ans. It was put — and connected in my presence by a man unknown to me, who appeared to be a workman employed in the factory of Henry Huber & Co.

X Q. 179. Did you apply any test to ascertain whether or not the joints or connections of the pipe connecting the space between the

two traps with the vacuum chamber of the tank were all perfectly air-tight?

Ans. I did not make any tests as to the air-tight character of any of the joints.

X Q. 180. Have you ever seen an apparatus constructed in accordance with the Peters & Donald patent operated with the tank first at one height and then at another?

Ans. I have not.

275 X Q. 181. Then what you have said in reference to the operation of a closet of this character, with a tank placed at different height, is based on theory and not upon fact, is it not, so far as water-closets are concerned?

Ans. It is.

X Q. 182. You have referred in your testimony to the degree of exertion necessary to be used in lifting the valves in the Peters & Donald closet by pulling down the longer end of the lever attached to the valves. The amount of exertion might easily be lessened, might it not, by lengthening the long arm of the lever?

Ans. My testimony had reference rather to the holding open than to the lifting of the valve. Either of these actions, however, might be rendered easier by lengthening the lever, though at the expense of increasing the range of motion through which the cord would have to be pulled.

X Q. 183. Suppose a pipe thirty-five feet long in which a perfect vacuum had been created—immersed in water—how high would the water rise in the pipe, the lower end, of course, being open?

Ans. Assuming the water to be without any air in solution, it would rise within one foot of the top of the pipes; asuming also that the experiment was performed at the sea level and with the barometer at a normal height, though, as I now remember, it would not rise quite as high as this because the tension of the vapor of water would impair the vacuum to an extent depending on the temperature.

X Q. 184. How high would the water rise which contained the usual amount of air contained by water at this altitude?

Ans. This would depend somewhat on the size of the pipe, but under ordinary conditions it might easily rise to the top of the pipe in parts; or, if the pipe were extended, a great many feet higher. In fact, I know of a case in my own experience in which a very promising arrangement of apparatus was rendered inoperative because the water under just such conditions existed upon boiling up to a height of more than forty feet.

276 X Q. 185. Then the presence of air in the water would increase the height to which it would rise in the pipe rather than decrease it?

Ans. Under the conditions here assumed it would, but under other conditions the precisely opposite effect would result.

X Q. 186. The conditions which I wish to assume that of a pipe three to four inches in diameter in which a perfect vacuum has been created and which is immersed in croton water such as found in the reservoirs of this city.

Ans. The exact action which would take place would be this: As the water rushed into the tube bubbles of air would form all through it—through the expansion of the dissolved air under the relieved pressure. As a result of this the column would rise in a pipe thirty-five feet high until it momentarily reached to or, as I might describe it, splashed against the upper end of the pipe, but during this time and afterwards this dissolved air would escape from the water and collect in the upper end of the pipe, where, together with the water vapor, it would in time fill a length of several feet, the exact distance depending upon the amount of air in solution and the temperature of the interior space. As a rough approximation I think it likely that that level of the water would finally stand four or five feet below the upper end.

X Q. 187. Suppose half the air only was drawn from the pipe instead of the whole, how high would the water rise in it approximately?

Ans. Making reasonable allowances for the various modifying actions, I think it would rise between fifteen and sixteen feet.

X Q. 188. Suppose you wished to cause the water to rise only one foot, what degree of rarefaction would be necessary?

Ans. Only enough to reduce its tension or initial pressure about half a pound per square inch—that is, the ordinary atmospheric pressure being fifteen pounds. If the pressure in the interior of the vessel were reduced to about fourteen pounds and a half water would rise in it one foot.

277 X Q. 189. And suppose you only desire to raise it four inches, what proportion of the air would you have to withdraw in order to create a sufficient degree of rarefaction to cause it to do so?

Ans. About one-ninetieth.

X Q. 190. What would be the weight per square inch of a column of water four inches high?

Ans. About one-sixth of a pound.

— Q. 191. Then, in a water-closet like that shown in the Peters & Donald patent, or the Boyle reissue, to which reference has been made, having a water seal in the exit of the bowl, a comparatively slight degree of rarefaction of the air within the space between the two traps would be necessary in order to cause the water to be passed out of the bowl by the atmospheric pressure into the space between the two traps, or, in other words, to start the siphoning, as it has been termed?

Ans. Provided the rarefaction was very rapidly produced, it would not need to be great as compared with a perfect vacuum to produce the so-called siphon action, but the mere height of the bridge or bend in siphon would not be an adequate measure of the degree of rarefaction required for the practical operation of this apparatus. In order that this so-called siphon action should take place it is not sufficient that the level of the water should be so raised in the bend as just to reach and overflow at this point, but the water in the bowl and bend of the trap must be put in rapid motion so as to be *a* carried over in mass nearly filling the entire

cross-section of the trap. If this is not done there would be a mere dribble over the edge and no such action as is understood when we speak of the siphon action in a water-closet would take place. To secure this result the apparatus for withdrawing the air must not only withdraw air enough to counterbalance the differences of level you have assumed, but must, in addition to this, develop a sufficient difference in pressure between the external air and the inclosed space to set the mass of water in the bowl and trap quickly into rapid motion; while, therefore, it is not necessary that what is called a "high vacuum" should be produced, a considerable volume
278 of air must be very quickly withdrawn by the exhausting apparatus.

X Q. 192. You have given some figures as to the amount of different kinds of gas which a given amount of water will absorb. How long will it take a cubic inch of water to absorb in itself seventy cubic inches of ammonia gas?

Ans. That would depend on the way in which they were brought together. If the ammonia were in excess and the water were thrown into it as a fine spray, means being taken to remove the heat produced by absorption, I think the water might reach this point of saturation in a few minutes. The rapidity with which smaller amounts——

Counsel for defendant objects to the witness testifying to any matters further than what the question calls for.

(Witness continuing:)—than that which is required for complete saturation are absorbed may be realized from this experiment. If a tall bell jar full of dry ammonia gas is set down with its open end on a tank of water the water will rise to the top of the jar like a flash, in some cases acquiring such velocity as to knock out the top end of the jar, so practically instantaneous is the absorption of the gas in the water.

X Q. 193. You have said considerable about what would happen under certain conditions. Suppose ammonia gas were drawn down through a pipe with water of about 60 or 70 degrees temperature during the space of one second or two seconds, what proportion of that gas would be absorbed by the water?

Ans. If the volume of the ammonia gas was not more than eight or ten times as great as that of the water it would all be absorbed; of course, I understand by your question that the ammonia gas is the only gas present.

X Q. 194. Do you know that from experiment with ammonia gas under those conditions? Please answer, yes or no.

Ans. If you require a categorical answer, I reply yes.

279 X Q. 195. Have you experimented with pneumatic water-closets in such a way as to ascertain how much ammonia gas would be absorbed by the water flowing from the flushing chamber down to the bowl of the closet?

Ans. I have not experimented with water-closets, though I have made numerous experiments as to the absorption of ammonia in water under parallel conditions.

X Q. 196. How rapidly is sewer gas absorbed by water and how much sewer gas will a cubic inch of water absorb?

Ans. Sewer gas is an entirely indefinite and inconstant mixture of various gases, so that it would be impossible to make any general statement as to its solubility as a whole in water; each of its constituents would dissolve in water according to the known property of that constituent, and therefore the amount dissolved would depend upon the composition of the particular specimen of sewer gas in question.

X Q. 197. Have you ever experimented with sewer gas to ascertain how much of it will be absorbed by cold water in a given length of time—that is, a cubic inch of water?

Ans. I have not.

X Q. 198. What is the conventional height for placing a tank above the bowl in pneumatic closets?

Ans. From my observation I should think five to seven feet; but, of course, this is a matter largely controlled by location.

X Q. 199. How far has your observation extended?

Ans. In various locations, from South Carolina to Maine, and as far West as New Mexico and Colorado.

X Q. 200. How many pneumatic water-closets have you seen during those extended observations?

(Objected to as incompetent and immaterial.)

Ans. It would be impossible for me to say.

X Q. 201. Can you swear that you have seen as many as five in addition to those you have seen in this office and at the place of business of Huber & Co.?

(Same objection.)

Ans. I cannot.

280 X Q. 202. Can you swear that you have seen as many as four?

(Same objection.)

Ans. I cannot.

X Q. 203. Can you swear you have seen as many as three?

(Same objection.)

Ans. As I have never examined the mechanism of such water-closets as I have seen outside of this office and at the place of business and factory of Huber & Co., I cannot swear as to their being pneumatic closets.

X Q. 204. Can you swear that you have seen as many as two outside of those mentioned?

(Same objection, and in addition that the line of examination now being conducted is absurdly trivial, and the present question has been fully answered by the witness in his last answer.)

Ans. I cannot swear from my own knowledge that any closets I have seen outside of those mentioned were of the construction known

as pneumatic water-closets, though I have no doubt in my own mind that a number of them were.

(The last part of the witness' answer, concerning wha the has no doubt of, is objected to as not responsive to the question asked.)

X Q. 205. What is the weight of what is commonly known as sewer gas?

Ans. There is no body or fixed composition known as sewer gas, and therefere it would be impossible to assign any definite weight to it. As, however, it is believed to rise through dry traps and other openings in soil pipes from the sewers, it is manifest that it must be lighter than air, since there are no other conditions except such lightness which would account for its so rising.

X Q. 206. If there happened to be a draft up the pipe for any reason, sewer gas would probably follow the course of the pipe, would it not, to some extent?

Ans. Undoubtedly.

281 X Q. 207. Who employed you to testify in this case, Professor?

(Objected to as incompetent, irrelevant, and immaterial.)

Ans. Mr. Arthur C. Fraser wrote to me nearly a month ago, asking me to make an appointment to meet Mr. Arthur S. Browne at his office to consult in reference to giving testimony in a case bearing upon some patents for pneumatic closets. I consulted with these gentlemen, as requested, and, finding the points which they desired to develop in accordance with my knowledge of the facts bearing upon the subject, agreed to come here when called upon and testify as to such facts. This is the extent, as I understand it, of my employment by anybody in this case.

X Q. 208. Do you understand that you are to be paid for testifying?

(Same objection.)

Ans. I understand that my time is to be paid for.

X Q. 209. Have you been paid for your services so far?

(Same objection.)

Ans. It strikes me that this is a question that concerns my private affairs, with which defendant's counsel has no concern.

X Q. 210. I insist upon an answer.

Counsel for complainant- advises witness not to answer the question.

The advice of counsel for complainant- is objected to by counsel for defendant.

The question is further objected to by counsel for complainant- as incompetent, irrelevant, and immaterial, and as an attempt on the part of counsel for defendant to pry into the private affairs of the witness.

Ans. While I have not the slightest objection to inform the court

as to anything and everything concerning my private affairs, I shall decline to answer this question, under the advice of counsel, because I consider it an impropriety which I do not care to encourage.

282 Notice is hereby given by counsel for defendant that unless this request on the part of the complainant- to the witness to withhold the information desired is withdrawn and the question answered by the witness defendant will move to have the deposition of the witness stricken from the record.

X Q. 211. Who paid you the amount you have received for testifying?

Objected to as before by counsel for complainant-, and the witness is advised not to answer the question.

Ans. As I consider this question not only an impropriety, but an impertinence, such as I have never heretofore encountered in an extended experience with counsel of high standing in this part of the country, I shall decline to answer it.

The statement of the witness as to counsel of high standing is objected to as not responsive and immaterial.

The defense insists upon the testimony asked for because the amount paid him in advance for testifying in this case is material to be known in order that the court may understand his motives for testifying and the degree in which he may be biased, and the notice already given is again repeated.

Counsel for complainant- states that he shall advise and instruct the witness to decline to answer all similar impertinent and prying questions, since it is well known that it is the universal custom in every court and jurisdiction of the United States that expert witnesses called in lawsuits to testify as to matters for which their professional capacity qualifies them as witnesses invariably receive compensation for their services.

283 The statement of counsel as to practice is objected to for the reason that he is not on the stand and has not been requested to give any evidence as to practice.

X Q. 212. Have you been subpœn-ed in this case to appear here?

(Objected to as incompetent, irrelevant, and immaterial.)

Ans. I have not been.

X Q. 213. How much are you to receive, in addition to what has already been paid you, for your services in this case?

Objected to by counsel for complainant- as incompetent and immaterial, as an attempt on the part of the counsel for defendant to enter into the private affairs of the witness, and the witness is advised and instructed not to answer the question unless so instructed by the order of a court of competent jurisdiction.

Ans. Under advice of counsel and for the reasons I have already explained I decline to answer the question.

X Q. 214. Is the whole or any part of the fee you are to receive in this case, in addition to what has been paid, contingent upon the success of complainant-?

Ans. I have no interest whatever, direct or indirect, in the success of this case.

X Q. 215. Is the amount which you have received equal to $500?

(Objected to by counsel for complainants for the reasons heretofore stated, and the witness is advised and instructed not to answer the question.)

Ans. Under the advice of counsel and for the reasons which I have already explained I decline to answer.

X Q. 216. Have you received as much as $1,000 for testifying in this case?

Same objection and same advice.

Ans. Under the advice of counsel and for the reasons already expressed I decline to answer this question.

284 X Q. 217. Have you consulted with Mr. Browne, counsel for complainant-in this case, with reference to your testimony since the direct examination began outside of the presence of counsel for defendant?

(Objected to as incompetent, irrelevant, and immaterial.)

Ans. I have had no consultation with him in reference to my testimony, but I have had various conversations, chiefly at lunch time, in which the subject-matter of this case was referred to.

X Q. 218. Did you not at such times discuss features of this case?

(Same objection.)

Ans. Not as having any reference to my testimony, but simply as one or another point interested me.

X Q. 219. Did you not consult with Mr. Browne this morning in reference to the matter brought out in your testimony-in-chief to-day?

(Same objection.)

Ans. Mr. Browne asked me some questions as to the density of gases and like matters which were substantially like some of the questions propounded in to-day's examination, and I replied to his questions as I did on my examination in accordance with my knowledge of the subjects involved.

X Q. 220. Have you conversed with Mr. Arthur C. Fraser concerning this case since your testimony was begun last Saturday?

(Same objection.)

Ans. Not so far as I recollect beyond the most casual reference.

HENRY MORTON.

Sworn to and subscribed before me this 11th day of September, 1888.

[SEAL.]

JNO. E. GAVIN,
Notary Public, N. Y. Co.

NEW YORK, *September* 10, 1888.

Met pursuant to adjournment.

Present: Same parties as before.

285 JOHN A. C. TEPPE, being called as a witness on behalf of complainant- and being duly sworn, testified as follows, said witness by consent being substituted for James E. Boyle:

Direct examination by Mr. BROWNE:

Q. 221. What is your name, age, residence, and occupation?

Ans. John A. C. Teppe; residence, 568 One hundred and fifty-seventh street; age, 37; occupation, superintendent.

Q. 222. Of what are you the superintendent?

Ans. I represent Mr. Henry Huber when he is not at the factory.

Q. 223. What factory do you refer to?

Ans. Henry Huber & Co., One hundred and thirty-sixth street and Rider avenue.

Q. 224. Are you familiar with the manufacture of water-closet tanks and have you manufactured or superintended the manufacture of water-closet tanks?

Ans. Yes.

Q. 225. Please examine Complainants' Exhibit Trombe Tank and state, if you can, what it is.

(Witness examines tank.)

Ans. It is a Trombe tank; what we call a Trombe tank.

Q. 226. Please state, if you can, where tanks similar to this tank are manufactured.

Objected to as irrelevant, incompetent, and not rebutting testimony, that subject having been gone into in chief by complainant-.

Ans. Not to my knowledge; I do not know, but I know where that tank (indicating exhibit) was manufactured.

Q. 227. Please state whether or not you know what it costs to manufacture a Trombe tank.

(Same objection.)

Ans. Yes, sir.

Q. 228. Please state what it does cost to manufacture a Trombe tank.

Ans. A twenty-four-inch Trombe tank will cost $7.30; eighteen-inch Trombe tank will cost $4.43.

286 Q. 229. What are the dimensions of what you have referred to as a twenty-four-inch Trombe tank?

Ans. Twenty-four by twelve by sixteen and three-quarters outside with a service box five by six and a quarter by twenty-two and a quarter.

Q. 230. Are the dimensions which you have given of the service box outside or inside dimensions?

Ans. Inside dimensions.

Counsel for defendant objects to all the above testimony of this

witness as not rebutting testimony and as irrelevant and incompetent at this stage of the case.

Q. 231. Please state whether or not the cost price which you have stated of a twenty-four-inch and of an eighteen-inch Trombe tank is given by you as the actual cost determined by the manufacture of such tanks or is an estimate merely.

Objected by counsel for defendant as not rebutting testimony and as irrelevant and incompetent.

Ans. Actual cost.

Q. 232. Please state whether or not the cost price which you have given of a twenty-four-inch Trombe tank is that of such a tank made of wood, copper-lined, such as is shown in Complainants' Exhibit Trombe Tank.

Ans. Yes, sir.

Q. 233. Please state whether or not Complainants' Exhibit Trombe Tank is similar to the twenty-four-inch Trombe tank of which you have given the cost price.

(Objected to as above.)

Ans. Yes, sir.

Q. 234. Please state whether or not you have made a detailed list of all of the several items of expense which enter into the cost of making a twenty-four-inch Trombe tank.

(Objected to as leading and not rebutting testimony.)

Ans. I have.

Q. 235. Have you the list referred to with you?

(Same objection.)

Ans. I have, sir.

287 Witness here produces the list referred to.

The detailed list of items of expense entering into and constituting the cost of a twenty-four-inch Trombe tank produced by the witness is hereby offered in evidence by counsel for complainants and is marked "Complainants' Exhibit No. 21, cost list of Trombe tank."

The exhibit is objected to as not constituting rebutting testimony and as incompetent.

Q. 236. Please examine Complainants' Exhibit No. 20, single-charge injector tank, here shown you, and state, if you know, what it is.

Witness examines exhibit.

Counsel for defendant objects to the ques- as irrelevant, incompetent, and immaterial as calling for testimony which is not in the nature of rebuttal, said exhibit not having been put in evidence in chief and defendant's witnesses having had *on* opportunity to testify concerning the same. Counsel give notice that if complainants' counsel insists on said exhibit remaining in evidence and on giving testimony concerning the same that they will move either

to have the same expunged from the record or for leave to take additional testimony on the part of the defendant.

Ans. I do. We call it an eighteen-inch single-charge Trombe tank.

Q. 237. Please state whether or not you have made a detailed list of the items of expense which enter into and constitute the cost of this eighteen-inch single-charge Trombe tank.

Ans. I have.

Q. 238. Have you such detailed list with you?

Ans. I have, sir.

Witness produces list referred to.

288 The detailed list of expenses produced by the witness is offered in evidence by counsel for complainants and is marked "Complainants' Exhibit No. 22, cost list single-charge injector tank."

Counsel for defendant objects to all testimony touching said list and to the list itself as not constituting rebutting testimony and as irrelevant and immaterial.

Q. 239. What are the dimensions of the eighteen-inch single-charge Trombe tank?

Ans. 18 x 10 x 13 inches outside.

Q. 240. Please examine Complainants' Exhibit No. 19, Peters & Donald tank, now shown you, and state whether or not you have previously examined it.

Counsel for defendant objects to the question as calling for testimony not in the nature of rebuttal and as irrelevant and incompetent, and gives to counsel for complainants the same notice already given touching the other tanks about which this witness has been examined.

Ans. Yes, sir.

Q. 241. State, if you know, where this tank was made.

Ans. 136th street and Third avenue.

Q. 242. At whose factory?

Ans. Henry Huber & Co.

Q. 243. State, if you know, what are the dimensions of this tank.

Ans. Yes, sir; 20 x 10 x 15½ inches outside; size of service box, 16½ x 6½ x 7½ inches inside.

Q. 244. Please state whether or not you have made an estimate of the cost of this tank.

Ans. Yes, sir.

Q. 245. What do you estimate to be the cost of this tank?

(Counsel for defendant objects for reasons heretofore stated.)

Ans. $7.19.

Q. 246. Have you or have you not made a detailed list of the items of expense entering into and constituting the cost of this tank?

289 Ans. I have.

Witness here produces said detailed list of expenses referred to.

The said list of expenses produced by the witness is hereby offered in evidence by counsel for complainant and is marked "Complainants' Exhibit No. 23, cost list complainants' Peters & Donald tank."

Q. 247. Please state whether or not a tank made like the Complainants' Exhibit Peters & Donald Tank, but of the same dimensions as Complainants' Exhibit Trombe Tank, would be more or less expensive than Complainants' Exhibit Peters & Donald Tank as now made.

Objected to for reasons heretofore stated, and also as assuming a fact and as leading and suggestive.

Ans. A Peters & Donald tank the same dimensions as the Trombe tank would be a little more expensive than it now is—that is, than the Exhibit 19 now is.

Q. 248. Why would it be more expensive than it now is?

Ans. It would require more lumber and copper. The labor would be the same and all the brass fixtures would be the same.

Q. 249. Please state, if you can, what would be the cost of the additional lumber and copper required.

Counsel for defendant objects to the question as incompetent, requiring the witness simply to make a guess; it is manifest that the amount would be trivial, yet it would require careful calculation in order to state the precise additional cost.

(Question withdrawn.)

Q. 250. State, if you know, which would be the more expensive, a tank made of iron, not enamelled and not galvanized, or a tank made of wood, copper-lined, provided that the tanks were in all other respects identical.

Objected to as assuming a fact, to wit, that witness has had
290 experience in manufacturing iron tanks such as the question implies; also as implying many conditions of uncertainty as to the thickness and heft of the iron tank and as to its form and construction; also as to the heft of the copper, the kind and quality of the lumber, and the finish and workmanship of the two tanks in question; also as not being testimony in rebuttal.

Ans. The copper tank would be the most expensive.

Q. 251. State whether or not you have ever made or superintended the making of water-closet tanks out of iron.

Ans. I have.

Q. 252. If a tank made out of iron, not enamelled or galvanized, were made of such weight and thickness as is usually considered proper and suitable for its being used as a water-closet tank, and another tank were made of the same holding capacity out of wood and copper-lined, being made of such character and thickness of wood and provided with such quality and thickness of copper inserted as a lining as is considered proper and suitable for its being used as a water-closet tank, and if these two tanks were in all other respects identical, which would be the more expensive tank?

Ans. The copper tank would be.

Q. 253. Please examine the tank now shown you and state whether or not you have ever seen it before.

Counsel for complainant- indicates a tank.

Counsel for the defendant objects to the question as calling for testimony not in rebuttal, and as irrelevant and incompetent, the tank shown the witness being one not hitherto introduced in evidence nor testified about by any witness in the case.

Ans. I have.

Tank referred to is hereby offered in evidence by counsel for complainant- and is marked "Complainants' Exhibit No. 24, collapsed tank."

291 Counsel for the defendant objects to the exhibit for the same reasons heretofore stated, touching other exhibits offered in evidence in rebuttal, and gives the like notices.

Q. 254. Please state in your own words all that you know about this tank, Exhibit No. 24.

Ans. This tank was connected with water for twenty-four hours and did not show any leak; all at once it started leaking. We took the tank down and our coppersmith unsoldered the plate in the tank and we found the copper collapsed.

Cross-examination by Mr. TAYLOR:

X Q. 255. You have stated that Complainants' Exhibit 24 was connected with the water twenty-four hours, at the end of which time you discovered it leaked. Did you connect it with the water?

Ans. One of our men did.

X Q. 256. Where?

Ans. At Henry Huber & Company's factory.

X Q. 257. Were you present?

Ans. I was.

X Q. 258. Did you see him connect it?

Ans. Yes, sir.

X Q. 259. How was it connected with the water?

Ans. We have a regular place where we try such closets and tanks.

X Q. 260. Was there an injector under it?

Ans. No, sir.

X Q. 261. What apparatus had you underneath the tank in order to try it?

Ans. It connected with the bowl of a closet.

X Q. 262. Did you ever connect Complainants' Exhibit 19 with the bowl of a water-closet?

Ans. One of our men did.

X Q. 263. Did you see it connected with the bowl?

Ans. Yes, sir.

X Q. 264. Did it work all right?

Ans. Yes, sir.

X Q. 265. How long was it connected?

292 Ans. For twenty-four hours, and then a couple of weeks after I saw it connected about two hours, when it started to leak.

X Q. 266. What, Exhibit 19 leaks? I am speaking of Complainants' Exhibit 19. Do you mean to say it leaks?

Ans. No, sir; I misunderstood you.

X Q. 267. Did you ever see Defendant's Exhibit 14 attached to water?

Ans. Yes, sir.

X Q. 268. Where?

Ans. At our factory—Huber & Co.'s.

X Q. 269. Did it work all right?

Ans. Yes, sir.

X Q. 270. Did it leak?

Ans. No, sir.

X Q. 271. How long was it connected at Huber & Co.'s factory?

Ans. About three hours.

X Q. 272. Do you know whether it has been used elsewhere?

Ans. I do not know.

X Q. 273. Where was it used—at what place?

Ans. At our factory, at 136th St. and Rider avenue.

X Q. 274. Who made Complainants' Exhibit 24? Did you make it?

Ans. Do you want to know the name? One of our men did.

X Q. 275. Have you a regular place at your factory where you test tanks?

Ans. Yes, sir.

X Q. 276. Do you test all of your Trombe tanks before they go out?

Ans. No, sir.

X Q. 277. What do you have a place to test tanks for?

Ans. For all new patents got out—all sorts of tanks. The Trombe tanks do not require testing any more. They are all perfect.

X Q. 278. When and where had you ever before tested the Peters & Donald tank?

293 Ans. No other place, to my knowledge.

X Q. 279. You never tested them?

Ans. No, sir.

X Q. 280. So that the two you have here produced—one marked Complainants' Exhibit No. 19 and the other Complainants' Exhibit 24—are the only ones which you ever made or caused to be made at your factory?

Ans. Yes, sir.

X Q. 281. They are the only ones which you have had anything to do with?

Ans. Yes, sir.

X Q. 282. How large is the air space—that is, the confined air space—between the water traps where you make the tests?

Ans. The tank is seven feet high from the floor.

X Q. 283. And what is beneath the bowl, if anything?

Ans. It runs down into the tank; that is all—a large tank in the cellar.

X Q. 284. Then there are no traps beneath the bowl——

Ans. (Witness interrupting:) Yes; there is.

X Q. 285. How many?

Ans. One.

X Q. 286. You do not think there are two traps beneath the floor?

Ans. No, sir.

X Q. 287. Only one?

Ans. Yes, sir.

X Q. 288. The test, then, that you made of this Peters & Donald tank—Exhibit 19—at your factory was with a water-closet that did not have two traps, but only had one trap?

Ans. One trap below the floor.

X Q. 289. Only one trap?

Ans. Yes; and we tried it with a Cascade bowl.

X Q. 290. That is, you tried the No. 19 with a Cascade bowl and only one trap?

Ans. Yes; below the floor.

294 X Q. 291. Did you have any connection between the sealed chamber and the soil trap below the trap (floor)?

Objected to by counsel for complainants as not germane to the direct examination, it not having been shown in the direct examination that the witness ever saw Exhibit No. 19 set up and in operation.

Ans. It was all fully connected.

X Q. 292. Do mean to testify that at the time you made the test of Exhibit 19 that you had the pipe which comes up over the top of this water-closet and connects with the sealed chamber and extends downward connected at its lower end with the soil pipe?

Same objection, and the question objected to for the further reason that it is misleading and as stating that the witness has said what it does not appear that he has said.

Ans. I cannot answer that because I did not pay any attention to it.

X Q. 293. You did not pay any attention to it?

Ans. No, sir.

X Q. 294. Then you will not swear that the brass rod which runs down the outside in Exhibit 19, extending downward, had anything fastened to its lower end which went down and connected with the soil pipe below the bowl, will you?

(Same objection.)

Ans. I cannot swear.

X Q 295. Don't you know, sir, as a matter of fact, that the brass pipe that comes down the end of the tank was not connected at all with anything which extended down below the bowl at the time that you made the test of Exhibit 19?

(Same objection.)

Ans. I did not make the test myself; I only saw the tank up; Cap't Boyle made the test.

X Q. 296. I now call your attention again to what complainant has put in this morning as Exhibit 24, and I will ask you to state positively whether at the time Exhibit 24 was set up at the
295 factory of Henry Huber & Company, did the brass rod which runs down at the end of the tank have any connection below the bowl of a water-closet?

Objected to by counsel for complainant-, as it has nowhere appeared that a brass pipe ever ran down on the outside of Complainants' Exhibit 24, and that therefore the question is misleading and calculated to deceive the witness.

Ans. I cannot positively say.

X Q. 297. Don't you know that it was not?

(Same objection.)

Ans. Not positively.

X Q. 298. Sir?

Ans. Not positively.

X Q. 299. Don't you know, as a fact, that this Exhibit 24 was set up in that factory and the water all permitted to go out of the sealed chamber without there being any way of sucking in air into that sealed chamber, and for the purpose of causing it to collapse, wasn't it? That was what you were trying to do, make it collapse, weren't you?

(Same objection.)

Ans. No; not at all. We were not trying to make it collapse; no, sir.

X Q. 300. As a matter of fact, at the time that you set this tank up was there any way by which air could be sucked from the outside atmosphere into the sealed chamber?

Ans. I don't think there was.

X Q. 301. Was there any way by which air could be sucked from any confined space into said sealed chamber that you saw?

(Objected to by counsel for complainant- as having no bearing on the direct examination.)

Ans. The closet and tank were properly connected.

X Q. 302. Do you mean to say that the rod which is designed to go down the end of the tank was in any manner connected whatever with any air space; will you swear to that?

296 (Same objection.)

Ans. No; I will not swear to that.

X Q. 303. Don't you know as a fact that it was not?

(Same objection.)

Ans. I will not swear.

X Q. 304. Didn't you observe whether it was or not?

(Same objection.)

Ans. I did not.

X Q. 305. What is the weight of the copper that is used in Complainants' Exhibit 24?

Objected to by counsel for complainant on the ground that it has not been shown by the direct examination that the witness has made any estimate of the weight of the copper in Exhibit 24.

Ans. We buy it for twelve-ounce copper.

X Q. 306. You don't know whether it is twelve-ounce copper or not, do you?

Ans. We take the manufacturer's word for it.

X Q. 307. When and where did you ever make cast-iron tanks for water-closets?

Ans. We are making iron tanks for water-closets right along.

X Q. 308. What sizes?

Ans. We make twenty-four-inch and eighteen-inch tanks.

X Q. 309. What are the other dimensions of the twenty-four-inch tanks that you speak of?

Ans. 24 x 14 x 10 inches.

X Q. 310. Do you know the actual manufacturer's cost of such a tank?

Ans. I know what we pay for them.

X Q. 311. I did not ask you that. I am asking you what it actually costs the manufacturers to make such a sized tank?

Ans. We do not manufacture them ourselves.

X Q. 312. I understood you to say that you did?

Ans. No, sir; that is a mistake.

X Q. 313. What do the castings cost per pound?

Ans. Two and a half cents we pay for them.

X Q. 314. Do you know what it costs the manufacturers to make them?

297 Ans. I do not.

X Q. 315. Then the cast-iron tanks cost two and a half cents a pound?

Ans. Yes, sir.

X Q. 316. How much does a tank of the dimensions you have spoken of—24 x 14 x 10—cost?

Ans. We pay a dollar for them.

X Q. 317. A dollar apiece?

Ans. A dollar apiece.

X Q. 318. You get all you want at that price?

Ans. We do.

X Q. 319. What would these same tanks cost if galvanized inside?

(Objected to by counsel for complainants as having no bearing on the direct examination.)

Ans. We pay three cents a pound for galvanizing.

X Q. 320. So that would cost about how much on such a sized tank as you are speaking of?

(Same objection.)

Ans. About $1.20; around that.

X Q. 321. So that with the sized tank you have given—24 x 14 x 10 inches would cost $2.10 if galvanized, wouldn't it?

(Same objection.)

Ans. About $2.20.

X Q. 322. That would be the worth of it?

(Same objection.)

Ans. Yes, sir.

X Q. 323. I now call your attention to Defendant's Exhibit 14. Please look at it and state if you know by looking at it what its weight would be approximately.

(Objected to by counsel for complainant-, the exhibit not having been referred to in the direct examination of the witness.)

Ans. (Witness lifts exhibit.) I should judge about ninety-five pounds.

X Q. 324. You think about ninety-five pounds with all the fixings?

Ans. Yes; as it is there.

X Q. 325. How much do ordinary tanks weigh?

298 Ans. The ones we sell weigh about forty pounds; from forty to forty-five pounds; different weights.

X Q. 326. Is the galvanizing done on the inside and outside of your tanks, or only on the inside where it costs three cents a pound for galvanizing?

(Objected to by counsel for complainants as having no bearing on the direct examination and as incompetent, irrelevant, and immaterial.)

Ans. Galvanizing in and outside.

X Q. 327. Both?

Ans. Yes, sir.

X Q. 328. What is the object of galvanizing iron, if any?

(Same objection.)

Ans. To keep the tank from rusting.

X Q. 329. Is it not to beautify the tank?

(Same objection.)

Ans. It makes the tank look a little better.

X Q. 330. Would not paint answer the purpose for the outside?

(Same objection.)

Ans. Just as well.

X Q. 331. Do Henry Huber & Co. deal in iron tanks?

Ans. Yes, sir.

X Q. 332. Do they buy and sell many of them?

(Objected to by counsel for complainants as incompetent, irrelevant, and immaterial.)

Ans. About three or four hundred a month.

X Q. 333. Do they use them galvanized or ungalvanized?

Objected to by counsel for complainant- as being incompetent, irrelevant, and immaterial and as having no bearing on the direct examination.

Ans. There are very few galvanized tanks called for.

X Q. 334. Is that because they cost more?

Ans. I do not suppose it is for that reason, because all the iron tanks we make go with cheaper closets.

299 X Q. 335. How many Trombe tanks on an average per month like Complainants' Exhibit Trombe Tank are made at the factory of Henry Huber & Co.?

Objected to by counsel for complainants as incompetent, irrelevant, and immaterial; as having no bearing on the direct examination and as an attempt on the part of the counsel for defendant to pry into the private business of the complainant-.

Ans. I cannot say without seeing our books.

X Q. 336. Do you make as many as fifty?

(Same objection.)

Ans. I guess we do.

X Q. 337. Which is the more expensive, cast copper or polished copper like the couplings at the top of the tank marked Defendant's Exhibit 19?

(Objected to as incompetent, irrelevant, and immaterial.)

Ans. The pipe we buy ready made.

X Q. 338. Please examine the check-valves at the top of the tank, marked Defendant's Exhibit 19, and say, if you know, where that was made.

(Objected to as incompetent, irrelevant, and immaterial.)

Ans. By the McNab and Harlan M'f'g Co.

X Q. 339. Do you know the cost of such a valve?

Ans. Yes, sir.

X Q. 340. Do you use such valves in connection with a Trombe tank?

Ans. No, sir.

X Q. 341. Do you use them with any of your plumbing work or in manufacturing water-closets?

Ans. Not that style.

X Q. 342. Is that a costly style?

Ans. Yes, sir.

X Q. 343. Does that valve connected with Defendant's Exhibit 19 and fastened to the brass rod at the top of the tank constitute one of the elements of the cost of that tank?

Ans. Yes, sir.

X Q. 344. How many of those did you buy at the time that you bought that one valve?

300 Ans. We keep them in stock all ready for the plumbers.

X Q. 345. How much did you put that in for in your estimate of the cost?

Ans. Twenty-six cents.

X Q. 346. Is that what the plumbers pay you for them?

Ans. That is what we pay for them.

X Q. 347. Is not that what you sell them at to the plumbers?

Ans. No, sir.

X Q. 348. I observe in this Exhibit 19 that you have a great many brass rods. Which is the more expensive, such brass rods or iron pipe that is galvanized inside, both being of the same size?

Objected to as being incompetent, irrelevant, and immaterial, it not appearing that iron rods are ever galvanized inside.

Ans. Brass pipe is the dearest.

X Q. 349. How much more proportionately—about three or four times the cost?

(Same objection.)

Ans. About five times.

X Q. 350. How much have you charged in this estimate of the cost of the Peters & Donald closet, marked Exhibit 23, for brass rods?

Ans. Eighty-one cents.

X Q. 351. How much have you charged, all told here, for brass work connected with this closet?

Ans. Two dollars and fifteen cents.

X Q. 352. How much have you charged in this estimate of the construction of a Trombe tank as shown in Exhibit 24 for brass work?

Ans. One dollar and eighty-three and one-half cents.

X Q. 353. What kind of a lever is attached to Exhibit 19 for the lifting of the water valve, is it cast iron or wrought iron?

Ans. Wrought iron.

X Q. 354. What kind of a lever is attached to Complainants' Exhibit Trombe Tank?

301 Ans. Cast iron.

X Q. 355. Which costs the more, cast-iron levers or wrought-iron levers?

Ans. It all depends on the size.

X Q. 356. What have you charged in your estimate of the cost of the Peters & Donald patent, as shown by Exhibit 23, to the lever?

Ans. Fifteen cents.

X Q. 357. What have you charged in your estimate of the cost of the Trombe tank, as shown in Exhibit 21, for the cast-iron lever?

Ans. Ten cents.

X Q. 358. I am not asking you about balls and mounting; I am

asking you about levers. I want to know how much you have charged in this for the lever.

Ans. Four cents, without labor.

X Q. 359. Four cents, then, was the worth of such a lever as is attached to the Peters & Donald tank, was it?

Ans. Yes, four cents.

X Q. 360. Four cents was the worth of the lever?

Ans. Not to make it complete as it is there on the tank.

X Q. 361. I am asking you whether four cents was the worth of the lever as shown in the Trombe tank.

Ans. No, sir; it was more, because it was heavier.

X Q. 362. How much does the lever for the Trombe tank cost?

Ans. The metal costs four cents.

X Q. 363. How much does it weigh?

(Objected to as incompetent, irrelevant, and immaterial.)

Ans. It weighs not over one and three-fourths pounds.

X Q. 364. What is it worth a pound?

Ans. Two and a half and three and a half cents; the lever is worth two and a half and the socket three and a half.

X Q. 365. What have you charged in the estimate of the cost of the Peters & Donald tank for making this wrought-iron lever—that is, the labor for making it?

302 Ans. Fifteen cents for iron and making it.

X Q. 366. What have you charged in the estimate of the cost of the Peters & Donald tank for the weight ball attached to the lever?

Ans. That is included in the lever itself; the whole thing as it is on the tank there.

X Q. 367. Where a number of tanks are being made at the same time, of precisely the same style, shape, and form, and with all the couplings and connections of the same shape, style, and form, they can be made more economically than where one is made, can they not?

Ans. Yes, sir.

X Q. 368. What per cent. cheaper would you say; twenty-five?

Ans. No, sir.

X Q. 369. What per cent.?

Ans. Probably five per cent. cheaper.

X Q. 370. In your estimate of the cost of the Trombe tank, have you measured simply the exact amount of lumber that goes into the tank?

Ans. There might not be exactly the number of feet, but whatever falls off we cannot use, but we have to pay for it. There may be half a foot or three or four inches.

X Q. 371. How much have you allowed for wastage?

Ans. Half a foot.

X Q. 372. Did you get at that by actual experiment, or is that approximate?

Ans. Actual experiment.

X Q. 373. On one particular tank?

Ans. Yes, sir.

X Q. 374. Which is the tank by which you determined that? Point it out if it is here.

Ans. It is not here.

X Q. 375. Where is it?

Ans. I took one out of a lot which we are making right straight along.

X Q. 376. And you found out that there was a loss of half a foot in making it?

Ans. Yes, so our carpenter said.

303 X Q. 377. You got that from the carpenter, did you?

Ans. Yes, sir.

X Q. 378. You did not measure it yourself?

Ans. No, sir.

X Q. 379. Then, if I understand you correctly, the amount of lumber that actually went into the construction of a Trombe tank, as per this estimate marked Exhibit 21, and the allowance for waste was not made by you but by the carpenter; am I correct?

Ans. Yes, sir.

X Q. 380. And you took what he told you?

Ans. I did.

X Q. 381. Now, I see that you have copper—7⅜, 31 cents; how much did you allow for waste of copper?

Ans. None at all.

X Q. 382. Is there no waste on copper?

Ans. None for us.

X Q. 383. Sir?

Ans. Not for us.

X Q. 384. Are there no clippings that come off the copper?

Ans. No, sir.

X Q. 385. Do you mean to say that the copper comes in identically the same sized sheet and the same form which you use in constructing the tank?

Ans. Exactly.

X Q. 386. Who is your coppersmith?

(Objected to as incompetent, irrelevant, and immaterial by counsel for complainant-.)

Ans. We have seven or eight.

X Q. 387. Who weighed the copper that went into this Trombe tank on which this estimate 21 is built?

Ans. A hundred insides of copper weigh so much and I took the weight from that.

X Q. 388. One hundred insides of tanks take so much copper and you took the amount required for one hundred and divided that by one?

Ans. Yes, sir.

X Q. 389. Who determined how much solder; did you?

(Same objection.)

304 Ans. I did.

X Q. 390. Did you weigh the solder?
Ans. I weighed the box before it was soldered and after it was soldered.
X Q. 391. On the tank that you made the test upon?
Ans. Yes, sir.
X Q. 392. How much have you put in this estimate for carpenter's time?
Ans. Twelve cents.
X Q. 393. How much time did it take the carpenter?
Ans. One carpenter can make a hundred a week.
X Q. 394. A hundred a week?
Ans. Yes, sir.
X Q. 395. What do you pay your carpenters per day?
Ans. Different prices.
X Q. 396. Well, take the carpenter that makes a hundred a week.
Ans. Two dollars a day.
X Q. 397. Do you mean to say that he makes a hundred every week?
Ans. He can.
X Q. 398. Does he?
Ans. He may not always work steady on Trombe tanks; he is making other tanks besides.
X Q. 399. Who timed the carpenter who made this particular one?
Ans. I know he can make a hundred a week.
X Q. 400. Did he ever work a week steady making them?
Ans. Yes, sir.
X Q. 401. Has he made a hundred any week during the last year?
Ans. I cannot say exactly.
X Q. 402. Have you ever made a hundred in any week during the last year?
Ans. Not during the last year.
X Q. 403. Have you, within the last five years, ever made one hundred of these Trombe tanks during one week?
305 Ans. Yes, sir.
X Q. 404. All made by one man?
Ans. Yes, sir.
X Q. 405. What is his name?
Ans. At present I cannot tell who made the hundred.
X Q. 406. How much time have you put in that estimate of making the Trombe tank for the coppersmith's work?
Ans. Fifty-six cents.
X Q. 407. Did you time him?
Ans. That is piece-work.
X Q. 408. Piece-work?
Ans. Yes, sir.
X Q. 409. Is that what you pay for piece-work?
Ans. Yes, sir.
X Q. 410. He gets so much for copper-finishing the tank?
Ans. Yes, sir.

X Q. 411. How much have you put in that estimate marked Exhibit 21, being what you say is the cost of the Trombe tank, for shop rent and the use of tools?

Ans. I have put nothing. It is the actual cost.

X Q. 412. Well, does it cost nothing to maintain a shop, to pay the rent, to keep tools and a room for the men to work in?

Ans. It does.

X Q. 413. Is not that a proper element of cost?

Ans. The members of the firm put that on after we get through.

X Q. 414. Is anything put on this estimate of the cost of Trombe tanks that you produced here, marked Exhibit 21, as shop rent?

Ans. No, sir.

X Q. 415. Then the actual cost is not here, is it?

Ans. That is what we call actual cost.

X Q. 416. To that would have to be added shop rent, tools, power, &c., would it not?

Ans. I suppose there would be; I cannot tell anything about it.

X Q. 417. Did you ever use any enamelled tanks at Henry Huber & Co.'s?

306 Ans. Not since I have been there.

X Q. 418. Do you know anything about the cost of enamelling?

Ans. I couldn't tell the cost.

X Q. 419. Can you state what it would cost to attach an overflow pipe to a tank like Exhibit (Complainants') 19, either at the end or side, and carried down below the tank and connected with the flushing pipe?

Objected to by counsel for complainant as incompetent, irrelevant, and immaterial, as not proper cross-examination, as referring to a hypothetical construction, which it does not appear that either defendant or any one else has ever made or proposed to make, and on the further ground that it does not appear whether or not such proposed construction would interfere with the operativeness of Complainants' Exhibit 19, and for the further reason that it calls upon the witness to make a mere guess.

Ans. I cannot exactly tell.

X Q. 420. I do not expect you to state the exact amount, but please state approximately what would be the cost to attach a waste pipe or overflow pipe from some point near the top of Complainants' Exhibit 19 and carry it down with a lead pipe and connected with a lead pipe below the tank. Would it cost more than twenty-five or thirty cents?

Objected to for the same reasons by counsel for complainants, and for the further reason that it is not indicated at what point the supposed pipe is to connect to the tank or if it opened below the tank.

Ans. It will certainly cost more than thirty-five cents.

X Q. 421. Please state what, in your opinion, it would cost to attach an overflow pipe at some point near the top of the tank marked Complainants' Exhibit 19 and carry it below the tank, say a foot,

and there attach such overflow pipe to the flushing pipe so
307 as to make a connection where the water runs out and not to permit the tank to overflow, supposing a pipe to be used of some proper size for an overflow pipe.

(Same objection.)

Ans. To make that connection of lead pipe would cost about fifty cents.

X Q. 422. There would be no difficulty in making such a connection if a person desired to do so, would there?

Ans. No, sir; I don't think there would.

X Q. 423. I once again call your attention to Exhibit 14, and will ask you to state whether, in your opinion, there would be any difficulty in so casting such exhibit as to leave a place for the attaching of an overflow pipe at some point near the top of the tank—that is, could the patterns so be made as to easily make a place for such an overflow pipe?

Objected to by counsel for complainants as not proper cross-examination, the said exhibit not having been referred to in the direct examination, and for the further reason that the question relates to a hypothetical and newly invented construction, which it does not appear has ever been embodied in a practical form either by defendant or any one else, and for the further reason that it has been shown in the cross-examination that the witness has never made any cast-iron work, and is hence not familiar with the making of such work, and for the further reason that the question calls upon the witness to make a mere guess.

Ans. I think it would be a difficult job, because there is apparently one tank put inside of another, and consequently you would have two holes, one in the inside as well as the outside.

X Q. 424. Did you ever have any experience in matters of that kind?

Ans. No, sir.

308 X Q. 425. Could not the castings be so made as to make a drop or a scallop near the top on one side, where the water would flow over and be caught into a tube and carried down as an overflow pipe without any difficulty, in your opinion?

(The objection immediately preceding repeated by counsel for complainant-.)

Ans. I don't think it could. The whole tank would overflow, wouldn't it?

X Q. 426. You are still in the employ of Henry Huber & Co.?

Ans. Yes, sir.

X Q. 427. How long have you been in their employ?

Ans. Seven years.

X Q. 428. Have you any interest in the firm?

Ans. No, sir.

JOHN A. C. TEPPE.

Sworn to and subscribed before me this 4th day of October, 1888.
[SEAL.] JNO. E. GAVIN,
Notary Public.

ADOLF C. TIEDEMANN, a witness on behalf of the complainant-, being duly sworn according to law, testified as follows:

Direct examination by Mr. BROWNE:

Q. 429. What is your name, age, residence, and occupation?
Ans. Adolf C. Tiedemann; age, thirty-seven; residence, 1302 Fulton avenue, New York city, and I am a member of the firm of Henry Huber & Company, manufacturers of plumbers' supplies.
Q. 430. Please examine Complainants' Exhibit No. 20, single-charge injector tank, and state whether or not you recognize what it is.

Counsel for defendant objects to the questions as calling for testimony not in rebuttal, as irrelevant and immaterial, and gives notice that if the witness is permitted to testify touching the
309 same that defendants claim the right either to have the same expunged or to give additional testimony which shall tend to meet and rebut the testimony sought.

Ans. This tank we call our single-charge Trombe cistern. It is manufactured by our firm.
Q. 432. State whether or not your firm has ever put this tank on the market.

(Objected to by counsel for defendant as leading, not rebutting testimony, and as irrelevant and immaterial.)

Ans. Yes, sir.
Q. 433. When did you first put it on the market?

(Same objection.)

Ans. In February of this year.
Q. 434. Please state whether or not your firm has ever manufactured or put upon the market water-closet tanks constructed in accordance with the tank shown and described in the Peters & Donald patent, No. 260,232, sued upon.

(Same objection.)

Ans. No, sir.
Q. 435. What reasons, if any, did your firm have for not putting upon the market water-closet tanks constructed in accordance with the tank shown and described in the Peters & Donald patent sued on?

Counsel for defendant objects to the question as leading and suggestive and as utterly incompetent—the reasons or motives of this witness can cut no figure in the case—and as not constituting rebutting testimony.

Ans. We considered the Boyle tank—called by us the No. 1 Tidal

Wave automatic cistern—superior to the Peters & Donald tank, as it provides for a copious after-wash, which is part of the flush, and refilling the bowl quickly; whereas the after-wash from the Peters & Donald cistern is provided by an after-drizzle from the ball cock.

Cross-examination by Mr. TAYLOR:

310 X Q. 436. The first tanks which Henry Huber & Co. put upon the market, like Complainants' Exhibit 20, now before you, was so put upon the market in February, 1888, was it?

Ans. Yes, sir.

X Q. 437. And that was after this suit was begun, was it?

Ans. Yes, sir.

X Q. 438. Is it not a fact that that closet was not put upon the market until after we had taken testimony here at this office in behalf of the plaintiffs last February?

Ans. This was on the eighth of February.

— 439. On the eighth of February you sold the first tank, then, that you sold at all?

Ans. On the eighth of February we sold the first tank of this style.

X Q. 440. When did you first learn that the defendant in this case used a single-charge tank—that is, one without a flushing chamber underneath the cistern?

Ans. Immediately after we heard that defendant was selling pneumatic closets called the Siphonia.

X Q. 441. How did you learn that fact?

(Objected to as incompetent, irrelevant, and immaterial by counsel for complainant-.)

Ans. From our travelers.

X Q. 442. Up to that time had you ever put upon the market a tank like Exhibit 20 to be used with a siphon water-closet, such as your Cascade?

Ans. No, sir.

X Q. 443. Since February, 1888, the time when you first put on the market a tank for a closet like this, how many have you sold?

Objected to by counsel for complainant- as incompetent, irrelevant, and immaterial.

Ans. I couldn't say exactly.

X Q. 444. Have you sold 25?

(Same objection.)

Ans. Yes, sir.

X Q. 445. More than that?

(Same objection.)

311 Ans. Many more; more than 1,000.

X Q. 446. To be used with what kind of closet?

(Same objection.)

Ans. With any style of pneumatic closets.

X Q. 447. How do you produce the after-wash in the tank marked Complainants' Exhibit 20, being the single charge tank which you say you began to make after this suit had begun?

Objected to by counsel for complainant- as incompetent, irrelevant, and immaterial and as having no bearing on the direct examination.

Ans. The same plan as in all other tanks.

X Q. 448. Did you not do it by what you call a "slow-closing valve"?

(Same objection.)

Ans. No, sir.

X Q. 449. I call your attention to the valve in this case that comes with the tank marked Complainants' Exhibit 20 and ask you if that is not a slow-closing valve.

(Same objection.)

Ans. No, sir.

X Q. 450. Do you know what a slow-closing valve is?

(Same objection.)

Ans. Yes, sir.

X Q. 451. And you say that this is not a slow-closing valve?

(Same objection.)

Ans. Yes, sir.

X Q. 452. Do you know how this tank works marked Complainants' Exhibit 20?

(Same objection.)

Ans. Yes, sir.

X Q. 453. You understand its practical operation, do you?

(Same objection.)

Ans. Yes, sir.

X Q. 454. State whether when the pull is let go the valve immediately seats itself at the bottom of the tank and keeps the water from running out.

312 (Same objection.)

Ans. The flush continues.

X Q. 455. Does not the valve seat itself immediately, thus closing the outflow of water the moment you let go of the pull?

(Same objection.)

Ans. No, sir.

X Q. 456. What keeps the valve up?

(Same objection.)

Ans. The valve is not kept up.

X Q. 457. How can the water run after the valve seats itself?

(Same objection.)

Ans. It runs through a siphon tube inside the valve—over a siphon standpipe inside the valve.

X Q. 458. Do you mean to say that there is a siphon pipe inside this valve?

(Same objection.)

Ans. Yes, sir.

X Q. 459. Then the after-wash with this closet, marked Complainants' Exhibit 20, is produced by water passing up through the valve and coming down through its centre on the siphon principle?

(Same objection.)

Ans. Yes, sir.

X Q. 460. That is to say, the after-wash is produced in use?

(Same objection.)

Ans. Not exactly. The after-wash can only be produced after breaking the vacuum between the two water seals of the closet.

X Q. 461. How is the vacuum between the two water seals of the closet broken?

(Same objection.)

Ans. By admitting air through the air pipe.

X Q. 462. Where does that air come from which breaks the vacuum between the water seals and the soil pipe?

(Same objection.)

Ans. From the room.

X Q. 463. How does it enter the air pipe and what causes it to enter?

313 (Same objection.)

Ans. It enters through the inverted tube put over the air pipe in the tank.

X Q. 464. Point out which tube you mean and describe it.

Ans. The inverted tube (indicating tube underneath the board on which the operating lever is mounted).

X Q. 465. When did you first see a tank constructed with such an inverted tube?

Ans. I must go back several years and refer to my previous testimony as to when the first Trombe cisterns were manufactured and put on the market.

X Q. 466. When did you first make a tank identically like this tank 20, to be used with a Cascade closet?

Ans. I testified that we sold the first on the 8th February.

X Q. 467. I ask you when you first made one.

Ans. That I do not know. I cannot say when we first manufactured them, because I do not know.

X Q. 468. How long before you sold it?

Ans. Maybe a month or two; maybe more.

X Q. 469. You don't know exactly, do you?

Ans. I do not know.

X Q. 470. Is it not true that since you have been fully advised of the fact that defendant is making a tank at present with a flushing chamber and using what is called a single water charge or cistern that you have begun to make nearly all of your tanks after that style?

Ans. Yes, sir.

X Q. 471. Prior to that time you made no form of siphon closets of that style, did you, that you put on the market?

Ans. No, sir.

X Q. 472. You found the style that defendant has adopted and put on the market cheaper than the style that you theretofore had made, did you?

Ans. Yes, sir.

X Q. 473. Considerably cheaper?

Ans. Not a great deal.

314 X Q. 474. About how much cheaper ha- you found the single charge tank, such as the defendant has been using since he made any tanks at all, than the kind described and pointed out in the reissued patent of Boyle, that you had theretofore made?

Ans. About three dollars.

X Q. 475. The closets which you had made prior to learning the fact that defendant was making and selling a single-charge tank were modeled after the drawings in Boyle's reissued patent, were they not?

Ans. It is necessary to show me the reissued patent before I can answer that question.

(Examination closed.)

This 21st day of September, 1888, Adolph C. Tiedemann appeared before me and read over the transcript of his testimony and signed the same. He stated that he desired to correct his answer to X Q. 470, stating that he did not at the time correctly understand the meaning of the question. He says:

It is not the fact that we make nearly all of our tanks after the style of the single-charge cistern as we sell about just as many service-box Trombe cisterns with a reservoir chamber. We sell now about equal numbers of each.

ADOLPH C. TIEDEMANN.

Sworn to and subscribed before me this 21st day of September, 1888.

[SEAL.] JNO. E. GAVIN,
Notary Public, N. Y. Co.

NEW YORK, *Sept. 12th*, 1888.

Met pursuant to adjournment.

Present: Same parties as before.

Counsel for complainant- hereby offers in evidence a Patent
315 Office copy of letters patent No. 249,577, granted to James E.

Boyle Nov. 15th, 1881, and the same is hereby marked "Complainants' Exhibit No. 16, slow-closing valve patent." Counsel for complainant- further states that this is the patent referred to by Mr. Arthur C. Fraser, complainants' expert, in his answer to interrogatory number twenty, in the examination-in-chief on behalf of complainant-, and the patent is here offered in evidence as showing the state of the art at the time of the grant of the original patent of which the Boyle patent sued on is a reissue.

The statement of counsel attempting to identify Complainants' Exhibit No. 16 as something referred to in the testimony of Mr. Frazer is objected to as improper, and as not evidence which can properly be considered in this case, inasmuch as the counsel has not been sworn as a witness in this case. The Exhibit No. 16, purporting to be a copy of the specification and drawings of letters patent No. 249,577, is also objected to on the ground that it is not a certified copy, and it does not appear that it is a true copy, or that any such patent was ever issued, from the evidence introduced; also because it is incompetent, irrelevant, and immaterial to the issues in this case, and is not rebuttal testimony or evidence, and if competent at all, or relevant, should have been introduced at a previous stage of the case, and cannot properly be introduced at this stage under the stipulations with reference to testimony which have been entered into between counsel.

Counsel for complainant- objects to the statement of the counsel for defendant as to the force and effect of the stipula-
316 tions hitherto entered into in reference to the testimony, the statement being contrary to the understanding of the same which counsel for complainant- has.

EDWARD MURPHY, a witness on behalf of complainant-, being duly sworn according to law, testified as follows:

Direct examination by Mr. BROWNE:

Q. 476. What is your name, age, residence, and occupation?

Ans. Edward Murphy; age, 55; residence, 308 East 43rd street, New York; occupation, plumber.

Q. 477. Have you had any other occupation recently except that of your plumbing trade?

Ans. Yes; I have been instructor of the plumbing classes for the past four years at the New York Trades School.

Q. 478. Where is your present place of business?

Ans. 626 Third avenue, New York.

Q. 479. Are you familiar with so-called "pneumatic water-closets," made and sold by Henry Huber & Co.?

Ans. To some extent, I am.

Q. 480. Have you ever dealt in any of these pneumatic closets?

Ans. Yes, I have.

Q. 481. Please give the names of such pneumatic closets that you have dealt in.

Ans. Tidal Wave, Geyser, Trombe closets.

Q. 482. What is your opinion of these closets?

(Objected to as irrelevant, incompetent, and immaterial, and as not rebutting testimony.)

Ans. I consider them very good closets.

Q. 483. What do you think of them from a sanitary point of view?

(Same objection.)

Ans. I know of none better to-day in the market.

Q. 484. Please examine Complainants' Exhibit No. 24, now shown you, and state whether or not you have ever seen it before.

317 (Same objection.)

Ans. I have.

Q. 485. How do you identify it as being an article that you have seen before?

Same objection, and, in order to save space on the record, defendants now and here object and protest against any testimony being given concerning said exhibit, because such testimony and said exhibit are not in the nature of rebutting testimony, and, if competent at all, should have been put in as a part of complainants' case in chief; and again repeat the notice, so often stated in regard to these posthumous exhibits introduced in rebutting testimony, that we shall move to have them excluded and the testimony concerning them expunged from the record, or else for leave of court to take testimony in behalf of defendant explaining, meeting, and rebutting the same.

Ans. I saw it in operation at Mr. Huber's factory, and I put my initials on it and the date.

Q. 486. What was the condition of this tank when you saw it in operation at Huber & Co.'s factory?

Ans. It appeared in working operation, so far as I saw it.

Q. 487. State whether or not you saw it operated.

Ans. I did; several times.

Q. 488. What do you understand is meant by the expression "local vent?"

Ans. By that is meant a pipe carried from the bowl above the water line either into a flue or some other pipe.

Q. 489. What is the object of a local vent?

Ans. It is to carry off any odors arising from the direct use of the closet.

Q. 490. State whether or not, in your opinion as a plumber, a local vent is a necessary or desirable feature in a water-closet?

318 Counsel for defendant insists on the objection last stated as applicable to the question, and also that the question calls for testimony absolutely irrelevant to any issue of the case, since neither of the patents sued on contains claims concerning "local vents," matters of that kind being older than the witness or any witness who has testified in the case.

Ans. I consider it very desirable.

Q. 491. Please state how many traps or water seals are considered essential to prevent the escape of sewer gas from a sewer or soil pipe.

(Same objections.)

Ans. One is quite sufficient, in my opinion.

Q. 492. What is a "back-air" connection?

(Same objections.)

Ans. A back-air connection is taken from the highest point of the trap on the sewer side and thence conducted to the vent pipe.

Q. 493. What is the object of a back-air connection?

(Same objections.)

Ans. There are two objects: one to prevent siphonage of the trap and the other to admit circulation of air through the pipes.

Q. 494. Is it customary among plumbers to provide traps with back-air connections?

(Same objections.)

Ans. It is; the board of health in New York makes it compulsory.

(Counsel for defendant objects to the answer on the ground that it is incompetent.)

Q. 495. Please state whether or not it is considered in any way objectionable or otherwise by plumbers to have a direct connection between a water-closet bowl and the water-supply or service pipe, which supplies water for flushing the bowl in cases where said connection is unobstructed.

(Objected to as incompetent, irrelevant, and not rebutting testimony.)

Ans. It is considered objectionable.

Q. 496. Why is it considered objectionable?

319 (Objected to as above.)

Ans. Because of the possible contamination of the supply pipe of the house by sucking in air from the bowl, thereby distributing it through the pipe.

Cross-examination by Mr. TAYLOR:

X Q. 497. Are you a customer of Mr. Huber's?

Ans. I am.

X Q. 498. Are you a creditor of Henry Huber's?

(Objected to by counsel for complainant as incompetent, irrelevant, and immaterial.)

Ans. No.

X Q. 499. Do you buy goods of his firm on credit?

(Same objection.)

Ans. Yes.

X Q. 500. Are you not indebted to the firm of Henry Huber & Co. now for goods?

(Same objection.)

Ans. I think not; in fact, I am pretty sure I am not.

X Q. 501. When did you last buy pneumatic water-closets from Henry Huber & Co.?

Ans. About one year ago.

X Q. 502. Have you bought none since?

Ans. No.

X Q. 503. Are you now in the plumbing business in the city of New York?

Ans. I am.

X Q. 504. Do you do a large business?

(Objected to by counsel for complainant- as incompetent irrelevant, and immaterial.)

Ans. No; rather a moderate one.

X Q. 505. Is your business connected with first-class residences and buildings or largely with inferior tenement-houses?

(Same objection.)

Ans. It is pretty evenly distributed between both.

X Q. 506. Have you any objections to stating the amount of business you do per year?

Ans. No.

X Q. 507. Well, state the amount of business you do per year.

320 (Objected to as incompetent, irrelevant, and immaterial by counsel for complainant-.)

Ans. Between twenty-five and thirty thousand dollars' worth per annum.

X Q. 508. And yet it is true, is it, that during the last year you have not used in your business any of Henry Huber & Co.'s pneumatic water-closets?

Ans. Quite true.

X Q. 509. Take the year preceding the last year and state how many of Henry Huber & Co.'s pneumatic water-closets you set up that year, if any at all.

Ans. I think about three altogether.

X Q. 510. Please state the names by which each of those three were called by Henry Huber & Co.

(Objected to as immaterial.)

Ans. Two, I think, were the Geyser and one was a Trombe.

X Q. 511. Now, in addition to these three pneumatic water-closets

you have mentioned, please state when before that time and how many other pneumatic water-closets such as are manufactured by Henry Huber & Co. you ever put up and give the names they were called respectively and in whose houses they were placed, if you can.

(Objected to as irrelevant and immaterial.)

Ans. I recollect one more. It was called the Tidal Wave and it was put up in the house of Henry Clausen, the brewer, at his residence, Eighty-third street and Avenue A.

By Mr. TAYLOR: Is it claimed, Mr. Browne, that the so-called Tidal Wave closet could by any construction be covered by the Boyle reissue sued on?

Mr. Browne states that he is informed and believes that Henry Huber & Co. now make and have made three styles of closets known as "Tidal Wave No. 1," "Tidal Wave No. 1 A," and "Tidal Wave No. 2."

He further states that he believes that the Tidal Wave No. 1 uses a tank which is not covered by the reissued patent sued on, but he believes that the tanks used with the Tidal Wave No. 1 A and the Tidal Wave No. 2 do have tanks covered by the reissue patent.

321

(By Mr. TAYLOR:)

X Q. 512. Please state whether the Tidal Wave pneumatic water-closet which you say you set up was what is known as Tidal Wave No. 1.

Ans. I put up a Tidal Wave No. 1.

X Q. 513. Then the only pneumatic water-closets of which you have any recollection of putting up are the four which you have just mentioned, are they, Mr. Murphy?

Ans. That is all.

X Q. 514. Have you bought other water-closets from Henry Huber & Co. during the last year to any extent?

(Objected to as irrelevant and immaterial.)

Ans. I have bought some; not to any extent, though.

X Q. 515. If, as you say, these pneumatic water-closets are as good as any you know of in the market and you do a business aggregating twenty-five thousand dollars per year, how happens it that you have set up none during the last year?

Ans. That arises because, in the first place, those closets are quite expensive compared with others, and, in the second place, I am governed by the requirements of my customers.

X Q. 516. Do you set up water-closets such as are safe from a sanitary standpoint?

Ans. I consider that I do.

X Q. 517. What is the best kind you set up during the last year and by what name is it known?

Ans. I have set up several of what is known by the name of the Washout closet.

X Q. 518. What is the cost of that closet as compared with the pneumatic water-closet?

Ans. About one-half.

X Q. 519. And as a plumber do you tell your customers it is safe and cleanly from a sanitary point of view?

322 Ans. I certainly do.

X Q. 520. And do you state to them the truth when you tell them that, according to your honest judgment?

Ans. I might say that I consider all those closets good, healthy, and sanitary; all the difference is that some of the closets are better than others. The best closet (tank?) a man ever used is a common wooden pail. It is not the material of which the closet is made, but the volume of water thrown into it. The object is to keep it clean and flushed out, and that, of course, depends on the amount of water used.

X Q. 521. Mr. Murphy, you have stated that one water seal or trap, properly constructed, is adequate to prevent the escape of sewer gas, have you not?

Ans. Yes.

X Q. 522. I will now ask you whether the shape and sized trap commonly used in a soil pipe, as commonly used by plumbers, with a proper supply of flushing water, is sufficient and adequate to prevent the escape of sewer gas from such pipe?

Ans. If such trap is properly ventilated, it is.

X Q. 523. As a matter of fact, this is known, to wit, that such trap is adequate and safe to prevent the escape of sewer gas when properly ventilated by plumbers and intelligent people generally who have studied the subject, is it not?

Ans. Yes.

X Q. 524. Please state whether the idea of ventilating the highest bend in the trap is a new or old one; and, if you say it is old, state how long it has been known in the art.

Ans. I don't think it is a very old one; it has not been generally used until the last fifteen years, in this city.

X Q. 525. Has it been in general use in this city for fifteen years—that is, the ventilation of such pipes?

Ans. I don't think it has. The board of health making it compulsory within the last five or six years has been the principal means of introducing it altogether.

323 X Q. 526. Yet is it not a fact that plumbers have been using it for more than fifteen years, and that they have the knowledge of the benefits accruing from its use for fully fifteen years past?

Ans. Quite possibly they may have had that knowledge, but I have no knowledge personally that it has been used previous to that time.

X Q. 527. Mr. Murphy, you say you saw Defendant's Exhibit 24 at Huber & Co.'s factory. What day did you see it there?

Ans. August 17th, 1888.

X Q. 528. What hour in the day?

Ans. About five o'clock in the afternoon.

X Q. 529. Was Mr. A. C. Fraser present?

Ans. Yes; Mr. Fraser was there.

X Q. 530. How long did you remain with Mr. Fraser the time you were there on the 17th of August examining the working of Exhibit No. 24?

Ans. Probably about half an hour.

X Q. 531. Now, Mr. Murphy, please state how tank marked Exhibit No. 24, with its connections, operated in siphoning the contents of the bowl on pulling the lever which raises the water valves.

Ans. Well, I noticed that it required considerable force to lift the valve that supplied the bowl of the closet with water; that at first the flush seemed to be quite strong, but failed toward the end of the flush; that it did not carry paper out of the closet very thoroughly and left an insufficient supply of water in the bowl afterwards.

X Q. 532. Did it not immediately on pulling down the lever siphon quickly the contents of the bowl—paper and everything else that was in it?

Ans. It certainly did.

X Q. 533. Do you use a water-closet at your house?

Ans. Yes; two.

X Q. 534. So far as you have had any experience or observation, paper is generally used by persons after they go to stool in the water-closet?

Ans. Yes, sir.

X Q. 535. What kind of paper is in use here in New York with with the class of people who have used these water-closets, so far as you have observed?

324 (Objected to as irrelevant.)

Ans. Closet paper, such as is generally used and prepared for such purposes, being tissue paper cut up into small sheets.

X Q. 536. As a practical plumber and from a sanitary view and the efficient working of a water-closet, you would recommend the use of that kind of paper, would you not?

Ans. Yes, sir.

X Q. 537. Is it not true that the paper so used is expected to be used and is in practice used before attention is given to the pull attached to the lever of the water-closet?

Ans. As a general rule, it is.

X Q. 538. You so conduct the thing in using it, do you not?

Ans. Yes; unless experimenting with a closet.

X Q. 539. Closets are made for practical use, are they not—not playthings?

Ans. I should think so.

X Q. 540. Now, Mr. Murphy, I desire to ask you if it is not true that the siphonic action which you observed when Exhibit 24 was set up with its connections was sufficiently operative and efficient

on pulling the lever to empty the contents of the bowl with the paper, excreta, &c., which would naturally be found in the bowl after its use by a person as a water-closet?

Ans. I did not think it did so as efficiently as it might.

X Q. 541. (Question repeated.)

Ans. I mean to say that the great bulk of the material in the bowl was carried off, but that some of the paper remained and was not carried off.

X Q. 542. You have not answered my question, sir. (Question repeated.)

Ans. My opinion is that the siphonic action was not sufficiently powerful to carry off the matter that would ordinarily go into a closet of that kind.

Y Q. 543. Will you swear that the siphonic action which you observed would not have been sufficient to have sucked out of
325 the bowl such ordinary excreta and paper as would be found in it immediately after a person leaving the stool?

Ans. As a general rule, I think it would.

X Q. 544. Was not the action on pulling the lever remarkably strong and efficient?

Ans. At the beginning the action seemed to be strong, but it dwindled away towards the end.

X Q. 545. Did it not, at the beginning, suck almost every particle of water and contents out of the bowl with haste and almost precipitately?

Ans. It did.

X Q. 546. After that, was not the siphonic action continuous for some time, thoroughly cleansing the bowl?

Ans. No; I did not think it was.

X Q. 547. How long did the siphonic action continue before it entirely ceased?

Ans. I don't recollect.

X Q 548. Did it continue as long as it does with the Trombe tank?

Ans. I don't think it did any longer.

X Q. 549. Was the first action of Exhibit 24, when you saw it in operation, as violent at the start in sucking water from the bowl as the Trombe tank?

Ans. It seemed to be.

X Q. 550. Well, was it more violent or less violent than what is called the Trombe closet in its first operation, in your observation?

Ans. It seemed to be about the same.

X Q. 551. As a practical plumber, did you discover any difference in the first operation in regard to the violence of Exhibit 24 and the Trombe tank? If so, please state the degree of difference as near as you can.

Ans. I could not notice any difference in the action between the two closets, and I believe there could not be any difference, as the siphonic action is governed by the same principle in both.

X Q. 552. As a practical plumber of long experience, if there had

been any substantial difference in the action, would you have observed it, do you think?

Ans. I don't think I would pay any attention to the difference, if there was any.

326 X Q. 553. You state, Mr. Murphy, that they both act on the same principle; what do you mean by that?

Ans. That, the discharge of both closets being effected by siphonage, the principle is the same in both cases.

X Q. 554. And practically, in your judgement, there is no difference?

Ans. I think not.

X Q. 555. How many gallons of water, in your judgment, ought to be used to cleanse the water-closet after each time it has been used by a person?

Ans. About three gallons.

X Q. 556. At the time you saw Exhibit 24, August 17, 1888, did you see the inside of the lower chamber?

Ans. No.

X Q. 557. Of your own knowledge, then, you don't know how or when the bottom of the upper tank was taken off, do you?

Ans. No.

X Q. 558. Nor you do not know when the inside of the bottom tank first appeared in a partial collapsed condition, do you?

Ans. No, sir.

X Q. 559. Do you know anything about the cost of doing plumbing work?

Ans. My customers think I do.

X Q. 560. Please look at Complainants' Exhibit No. 19 and state whether there would be any difficulty in so constructing a tank like this as to have an overflow pipe entering the upper chamber near its top and then extending downward below the bottom of the tank, either to the bowl or connecting to the flushing pipe?

Objected to by counsel for complainant as incompetent, irrelevant, and immaterial, as having no bearing on the direct examination.

Ans. I don't think there would be any difficulty in constructing such an overflow.

X Q. 561. What material is generally used for flushing pipes for water-closets?

(Same objection.)

327 Ans. Lead pipe.

X Q. 562. Now state what, in your opinion, would a proper sized overflow lead pipe connected at the proper place in the upper chamber of a tank like Exhibit 19 and then extending below the tank, say one foot, and there connected with the flushing pipe, add to the cost of such a closet.

(Same objection.)

Ans. Well, I should say a one-inch lead pipe would be quite suf-

ficient for such purpose, and might add a dollar and a half or two dollars to the cost of the cistern or apparatus.

X Q. 563. What is the cost of inch lead pipe per running foot?

(Same objection.)

Ans. About twenty cents per foot.

X Q. 564. What would be the cost of such a pipe as I have indicated, say two and a half feet long?

(Same objection.)

Ans. About fifty cents.

X Q. 565. How could it be connected at its lower end to the flushing pipe, by soldering?

(Same objection.)

Ans. By soldering and branching it in.

X Q. 566. How many minutes would it take a plumber to branch and solder that in at the lower end?

(Same objection.)

Ans. From one hundred and twenty to one hundred and fifty minutes.

X Q. 567. Have you ever made any connections to lead pipes personally such as would be required to connect the flushing pipe and the overflow pipe where it took you two hours' time to make such a connection?

(Same objection.)

Ans. I have no such personal knowledge.

X Q. 568. Then you don't know the time it would require, do you, of your own personal knowledge?

(Same objection.)

Ans. I certainly do.

328 X Q. 569. Mr. Murphy, on the occasion when you saw Plaintiffs' Exhibit 24 set up at the factory of Henry Huber & Co., what kind of paper was thrown into the bowl with which the tank was connected; was it water-closet paper?

Ans. No; newspaper.

X Q. 570. Who was it that put the newspaper in the bowl on that occasion?

Ans. Mr. Boyle.

X Q. 571. Can you swear how much he put in?

Ans. My recollection is that he put in a whole newspaper at a time rolled up into a ball.

X Q. 572. Did it draw any of them through into the soil pipe when it was so thrown in?

Ans. The Trombe closet did draw it in. I don't know whether Exhibit No. 24 did.

X Q. 573. Will you swear it didn't?

Ans. No; my recollection is somewhat indistinct on that point.

X Q. 574. Have you been in the habit of using a wad of paper of the bulk of an entire New York newspaper when you go to stool?

Ans. No, sir.

X Q. 575. So far as you have observed in the city of New York, are the citizens in the habit of doing it?

Ans. No; I think not.

X Q. 576. Do you advise your customers that it is safe and expedient to throw bulky substances like that into the bowl of a water-closet to be carried down into the soil pipe?

Ans. No; I leave that to their own good sense and judgment.

X Q. 577. You would not regard it a proper thing to do to throw towels, old garments, whole newspapers, and dead cats and other bulky substances into the bowl of a water-closet to be sucked down by siphonic action into the lower trap of the soil passage, would you?

Ans. No; I would not.

X Q. 578. Would you not, as a practical plumber and a sensible man, condemn any such use of a water-closet as indicated in the last question?

329 Ans. For ordinary purposes I would, but for an extreme test I would permit something beyond the ordinary use.

X Q. 579. Kindly state the exigency where such use would be justified, in your opinion.

Ans. Well, in testing two or more closets in order to see which of them would have the more powerful action on the material thrown in.

X Q. 580. Nevertheless, for practical use, would you not condemn such use of a water-closet by a family?

Ans. I certainly would.

X Q. 581. Why would you condemn it?

Ans. Because it is unnecessary and may possibly have the result of creating an injury in the soil pipe or in the water-closet.

X Q. 582. State whether where the lower trap of a pneumatic water-closet is not back-aired it is liable to have the water siphoned out of it.

Ans. It is; because the vacuum being created in the soil pipe there is no chance for the air to enter it, and therefore siphonage is bound to take place.

X Q. 583. In such case what causes or creates the vacuum likely to produce the siphoning?

Ans. The downward flow of the water carries the air in the pipe with it, which creates the vacuum, and the atmospheric pressure on the other side of the trap forces the water out of the trap, producing the siphonic action.

X Q. 584. If the water in a given case is siphoned out of the lower trap what injurious effects are liable to result therefrom?

Ans. The lower trap being emptied, it is possible water enough may not enter it to refill it from the upper trap, and hence if such closet be a pneumatic one it would fail to act under such circumstances.

X Q. 585. Please state whether, in your opinion, if a pipe was con-

nected in the air space between the two traps in a siphonic water-closet, with its other end opening into the room, and the water from any cause had become siphoned out of the lower trap, there would be danger of foul gases entering the room.

330 Objected to by counsel for complainant- as having no bearing on the direct examination, counsel for defendant, under cover of cross-examination, endeavoring to make the witness their own, and counsel for complainant- gives notice that if such line of examination is persisted in he will cross-examine the witness on such matters the same as if the witness were defendant's own witness, and counsel for complainant- further objects to it as incompetent, irrelevant, and immaterial, since the construction assumed in the question is a purely hypothetical one, having no existence in fact and no bearing upon any of the issues in this case.

Ans. It certainly would enter the room.

X Q. 586. State whether, in your opinion, if foul air is permitted to descend with a stream of water and the water falls and is disseminated over a surface such foul air would be liable to arise and contaminate the air in a room.

(Same objections and same notice.)

Ans. If it descends and is carried away it cannot possibly arise and contaminate the air of a room.

X Q. 587. Which is the lighter, gases composing sewer gas or ordinary atmospheric air?

Same objections and same notice, and counsel for complainants makes the further objection that it nowhere appears in the direct examination that the witness is competent to answer concerning the facts assumed and alleged to exist in the question.

Ans. I don't think there is any substantial difference between them. The ingredients of sewer gas, some of them, are really heavier than atmospheric air and some lighter. The great bulk of sewer gas, or what is called sewer gas, is really atmospheric air itself. Hence I think there is really no difference between what is known as sewer gas and atmospheric air.

X Q. 588. State what, in your opinion, sewer gas is.

(Same objections and same notice.)

331 Ans. Sewer gas is nothing but atmospheric air contaminated by the exhalations of sewers.

X Q. 589. Mr. Murphy, if it required a weight of six pounds to lift the water valves in Complainants' Exhibit 19, when the tank is in operation, with the projecting end of a lever the length it now is, then what weight would it require to lift said valves if that end of the lever was twice as long as it is?

(Same objection and notice repeated.)

Ans. Just half the weight.

X Q. 590. That is a law in mechanics which every intelligent person is supposed to understand, is it not?

(Same objection and same notice.)

Ans. Yes, sir.

X X. 591. Would there be any difficulty, in your opinion, of constructing the projecting end of the lever of Exhibit 19 so that it would be longer than it now is, thus diminishing the force necessary to raise the valves?

(Same objection and notice repeated.)

Ans. The principal objection would be that there is usually not enough room for lengthening such lever in the apartment devoted to such water-closets.

X Q. 592. I call your attention to a heavy cast-iron ball fastened between the attachment which lifts the valves and the fulcrum of the lever, and will ask you to state whether the weight of that ball adds to the necessary weight required to lift the water valve.

Same objections and notice repeated. Counsel for complainant further objects to the question as calling upon the witness to testify in reference to an exhibit which it does not appear has ever been seen by the witness prior to his attendance to-day at this examination, and hence the purpose and object of the construction referred to in the question is not known by the witness:

Ans. It certainly does.

X Q. 593. Did you examine critically and carefully the shape, form, and construction of the lever which was attached
332 to Complainants' Exhibit 24 when you saw it operated at the factory of Henry Huber & Co.?

Ans. I did not.

X Q. 594. Then whether it was this identical lever now attached to Exhibit 19, with this heavy iron ball attached to the inner arm, or not, you cannot state, can you?

Ans. No, sir.

X Q. 595. On the occasion when you saw Complainants' Exhibit 24 operated, as you have testified, did you examine carefully and critically the several connections made with the water supply, and also those connecting the sealed chamber with the air space between the two water traps in the soil pipe, or the water trap in the soil pipe and the one in the bowl, so as to know whether these connections were made absolutely air-tight?

Ans. So far as a superficial examination would lead me to think I am under the impression that they were made all right from the fact that the operation of the tank and closet seemed to be correct so far as it went.

X Q. 596. Prof. Murphy, you misunderstand my question. Did you carefully and critically examine the connections referred to in my last question?

Ans. I must say that I did not.

X Q. 597. The perfection of such connections would produce a better effect with a closet than would be produced without such perfect air-tight connections, would it not?

Ans. Most undoubtedly.

X Q. 598. I will ask you to state again with what school you are connected as a teacher or instructor in the art of plumbing at present.

Ans. The New York trades school.

X Q. 599. How long have you been an instructor in said school?

Ans. Four years.

X Q. 600. State, if you please, what chairs or departments there are in said school.

(Objected to as irrelevant and immaterial.)

Ans. There are about eight or ten distinct trades taught there.

333 X Q. 601. Have you, ever since you have been connected with that school, been an instructor in what pertains to the theory and practice in the art of plumbing?

Ans. That was part of my duties there to instruct in the theories in the art of plumbing.

X Q. 602. Do you know and can you swear that the flushing chamber of Exhibit No. 24 was full of water at the time you saw it operated?

Ans. I could not tell that.

X Q. 603. Please state which will admit of a more rapid flow of water from a chamber or service box such as is shown in Complainants' Exhibit 19 and such as was in Complainants' Exhibit 24 before the top part of the service box or sealed chamber was taken off, if one had a smaller pipe and the other a larger flushing pipe. I mean, of course, which would cause the most rapid and copious flush of water, such a chamber with a large flushing pipe or a like flushing pipe smaller in its interior diameter?

Ans. Well, the cistern having the larger pipe would naturally discharge the larger amount of water in a given time.

X Q. 604. Would not any ordinarily intelligent plumber know that fact?

Ans. Well, I should think he would if he knew anything.

X Q. 605. Is it not true, then, that the rapidity with which water is supplied to the bowl from the service box is a matter of mere mechanical construction?

Ans. I should say so.

X Q. 606. With a given quantity of water in the service box it would be a matter of mere mechanical construction to so adjust the flushing pipe in size as to cause the water to flow out as quickly or less rapidly, as might be desired? Is not that true?

Ans. If there was free access of air to the reservoir the quantity of water discharged would be proportional to the size of the pipe, but if the service box were air-tight, then, indeed, it would make very little difference how large the pipe was, as the water would hardly come out at all.

334 X Q. 607. If, however, there was air drawn through an air pipe from an air chamber, thus causing a back pressure or down pressure on the water, then what effect would the relative size of the flushing pipes have on the outflow of water?

(Objected to as having no bearing on the direct examination.)

Ans. If the air pipe was as large or larger than the flushing pipe the discharge would differ but little from that which it would have if open to the air.

X Q. 608. Do you mean to state that a volume of air will not pass through a pipe of a given size more rapidly than a volume of water, or don't you know?

(Same objection.)

Ans. I don't think it will pass as rapidly through as a volume of water.

X Q. 609. Did you ever test it?

(Same objection.)

Ans. No; but I think I know the reason why it would not pass as rapidly through as water. Water, being incompressible, will be forced through a pipe, subject, of course, to friction and pressure; air will be forced through under the same conditions, but in addition, being compressible, will require somewhat more pressure to force it through.

X Q. 610. Please state whether you are paid or are to be paid for appearing here to testify in this case.

Ans. I am happy to state, sir, that the man who would offer to pay me for appearing in this case would have to knock me down or I would knock him down. I am not in the market and cannot be bought.

By Mr. TAYLOR: I believe that, Mr. Murphy, and I only asked the question to draw the contrast between your testimony and that of other witnesses who have been paid largely, as we believe, by the complainant- to spin out theories which the complainant- has introduced in an effort to build up a case.

Counsel for complainants objects and protests against the unwarranted implication contained in the statement of Mr. Taylor
335 against the reputations of the witnesses who have appeared in this case on behalf of complainants and whose characters and motives are well known to be beyond and above all suspicion. It is a well-known fact to every court in the United States that all professional persons who are called to testify as experts in lawsuits on matters exclusively within their professional knowledge invariably receive compensation proportional to their professional capacity and reputation as fair and unbiased men, and since the weight of the testimony of such experts, acting in their professional capacity, depends wholly and entirely upon the validity of the reasons which they give in support of their testimony, the question of their compensation is wholly immaterial and irrelvant.

EDWARD MURPHY.

Sworn to and subscribed before me this 20th day of September, 1888.

[SEAL.]

JNO. E. GAVIN,
Notary Public, New York County.

ARTHUR C. FRASER, a witness on behalf of complainant-, being duly sworn according to law, testified as follows:

Direct examination by Mr. BROWNE:

Q. 316. What is your name, age, residence, and occupation?

Ans. Arthur C. Fraser; age, twenty-nine; residence, 226 Quincy street, Brooklyn; occupation, solicitor of patents and mechanical expert.

Q. 316½. Please examine Complainants' Exhibit No. 19, Peters & Donald tank, now shown you, and state whether or not you have previously examined it; and, if so, when, where, and under what circumstances.

326 Objected to by counsel for defendant as irrelevant, incompetent, and immaterial, as not in the nature of rebutting testimony, but such evidence as is relevant should be put in in chief, and notice is given that counsel for defendant will move the court either to expunge such evidence as is now sought, otherwise for leave to adduce additional evidence on the part of the defendant rebutting such testimony as is now sought to be adduced, and counsel, without repeating the like objection, desires that this should apply to any and all testimony touching the new exhibits which have been offered in rebutting testimony now being taken.

Ans. I identify this tank as one which I examined and tested at Huber & Co.'s factory, in Mott Haven, on September 6th, 1888.

Ques. 317. Please compare this tank with the tank shown and described in the Peters & Donald patent, 260,232, sued on, and state in what respects, if any, it resembles or differs from the construction shown and described in said patent.

Ans. This tank resembles that shown in the drawing of the Peters & Donald patent in that it embodies in its construction all of the essential parts there shown, viz., a reservoir, a vacuum chamber or service box beneath the reservoir, an inlet valve from the reservoir to the service box, an outlet valve from the service box to the outlet connection to which the flushing pipe lettered "14" in the patent drawing is to be attached, a counter-weighted lever at the top of the tank for operating these valves, an air pipe leading from the top of the vacuum chamber or service box extending upwardly, laterally, and downwardly (being the pipe marked "5" in the patent drawing), a check-valve opening outwardly from this air pipe, a float-valve in the reservoir with connections adapted for uniting a water supply pipe to it for admitting water to the reservoir, and a small tube or bleeder pipe extending from the outlet of this
337 float-valve and leading down outside of the tank and communicating with the flushing-pipe connecter just beneath the outlet valve. The two valves are of substantially the same construction as shown in the patent drawing, the upper or inlet valve being a piston working over holes or ports in a cylindrical tube extending from the reservoir down into the vacuum chamber, while the outlet valve is of ordinary construction and operated from

the inlet valve by being connected to it through the medium of a chain.

The differences between this tank and that shown in the patent are almost entirely in the details of construction. The most important difference is that the tank shown in the patent is to all appearance an iron tank made of two shells or parts fastened together with a packed joint, while this Exhibit 19 is a wooden tank lined with tinned-dipped sheet copper, the vacuum chamber beneath being separated from the reservoir above by soldering in a cast-metal plate. The other differences are very minute ones, such as, 1st, the precise shape of the air pipe, which is carried over in a curve in the patent drawing, but is rectangular in the exhibit; 2d, the precise location of the check-valve, which is a little differently placed in the exhibit; 3d, the precise method of connecting the bleeder pipe to the float-valve, it being apparently joined to the valve shell in the patent, whereas in the exhibit it is thrust into the outlet from the valve; and, 4th, the external shape of the tank—a difference which results from the different material used.

The differences which I have noted are not such as would change in any way the operation of the tank.

Q. 318. Please examine Complainants' Exhibit No. 20, single-charge injector tank, now shown you, and state whether or not you have previously examined it; and, if so, when, where, and under what circumstances.

Ans. I have previously examined this tank at Huber & Co.'s factory on the 6th of this month.

Q. 319. Please describe its construction and explain its mode of operation.

338 Ans. It is a tank without a service box, or what I should call a single-charge tank, its capacity being just sufficient for a single flushing of the closet. It has connections underneath for a flushing pipe leading to the water-closet bowl and an air pipe leading to the confined air space between the two traps of a pneumatic closet. Its flushing outlet is controlled by a siphon valve which, when lifted, permits the water to flow from the tank directly through the valve seat into the flushing pipe, so that when the valve is dropped the suction caused by the descending water starts the outflow of water through the siphon. Such valves are very common in water-closet tanks and have been used for many years. The particular construction of such valve used in this tank is what is called a concentric-tube siphon, being constructed of a smaller tube passing through the valve and extending upward to above the water level in the tank and a larger tube arranged concentrically around the smaller one with its bottom end lifted somewhat above the valve and its upper end extending above the top of the smaller tube, communicating therewith and closed by a cap, so that the annular space between the two tubes forms the short leg of the siphon and the inner tube forms the long leg of the siphon. Thus the water flows up between the tubes and down the inner tube until the tank is emptied, whereupon the siphon takes in air which destroys the suc-

tion and the outflow ceases. The tank is then refilled by water admitted through the ordinary float-valve.

The pneumatic operation of this tank is due to the air pipe being connected by means of an air passage with the flushing outlet in such manner that the outflowing flushing water draws air along with it from the air pipe, the construction being essentially that of an injector or ejector. The air pipe extends up into the tank nearly to the top; around it is a brass tube and the annular space between the two communicates with a passage cored out in the brass casting, which is seen projecting on the underside of the tank, this cored-out passage opening into the flushing-water outlet directly be-
339 neath the valve. Within the tank an air bell or tube capped over at its top is slipped over the two concentric pipes and extends down, its bottom end opening at about two or three inches above the bottom of the tank.

The operation is thus: The siphon valve being momentarily lifted and dropped, the outflow of flushing water is established. This water, in flowing through the injector, sucks air from the annular space between the inner and middle tube. The outer tube or air bell being sealed in the water of the tank, this suction extends down the air pipe, the air being drawn therefrom to greater or less extent and carried down the flushing pipe along with the flushing water. When enough water has run out of the tank to unseal the bottom end of the air bell, air is admitted through the air bell into the air pipe and the vacuum therein is broken. The remaining water in running out constitutes the after-wash for refilling the bowl. The outflow continues until the siphon has drawn all the water from the tank down to the level of the open bottom of the outer tube.

The construction of this tank, Exhibit 20, is the same as that of the tank shown in the Boyle reissue No. 10826, if the reservoir E and service box F were both thrown into one, being made small enough to hold only a single charge of flushing water and omitting the tube F and vent pipe *f* and putting the valve over the outlet *i*. Furthermore, a siphon valve is substituted for an ordinary tappet valve. Siphon valves of this character are commonly used for the purpose of discharging the entire contents of the tank without requiring the person operating the closet to continue to hold the valve lifted during the entire time that the tank is emptying, an instantaneous pull and release being sufficient.

Counsel for defendant objects to the entire answer of the witness as not constituting rebutting testimony, and also objects especially to that part of the answer wherein the witness undertakes to minify the elements shown and described in the Boyle reissue patent,
340 but which are not embodied in the construction of tank Exhibit 20, and counsel submit that the court on inspection of the drawings and description in the Boyle reissue would be competent to determine the parts omitted in Exhibit 20, gotten up at this stage of the case and put in evidence under the claim of being rebutting testimony.

Q. Please state whether or not you have ever seen in operation Complainants' Exhibit Peters & Donald Tank and Complainants' Exhibit Single Charge Injector Tank; and, if so, where and when, and explain how they operated.

Counsel for defendant objects to the question as not calling for legitimate rebutting testimony and as irrelevant and incompetent.

Ans. I tested and operated both these tanks at Huber & Co.'s factory, on September 6th instant. The tests were made with these and other tanks in the presence of Prof. Henry Morton, of Mr. John A. C. Teppe and others. The tests were made in connection with one of Huber & Co.'s "Cascade" bowls, which was set with a plumber's trap beneath the floor in order to form a confined air space between the upper trap formed in the earthenware bowl and this lower trap. The several tanks were mounted over this bowl, one after another, all at a uniform height of seven feet three inches from the floor to the bottom of the tank. Rubber tubes were used as the flushing and air pipes instead of the usual lead pipes, the same rubber tubes being used and connected in the same way with all the tanks, so that all of the tanks operated under precisely the same conditions.

Complainants' Exhibit 19, Peters & Donald tank, when connected in this way and filled with water, was operated several times by Prof. Morton and myself. I timed its operations with a result averaging as follows: On pulling down the lever the flow commenced,
341 and almost instantly and before the flushing water entered the bowl the water was suddenly and almost violently drawn out of the bowl, the vacuum being broken by air entering through the bowl in three seconds after pulling the lever; then a back flow or regurgitation occurred which sealed the outlet from the bowl, whereupon a slow outflow through the bowl commenced, the water streaming down the sides of the bowl and being as fast drawn out by the vacuum, which continued until eighteen seconds had elapsed from the first pulling of the lever; at this instant the vacuum seemed to cease and the water flowed partly back into the bowl by regurgitation from the up leg of the upper-trap. This indicated that all the water had run out of the vacuum chamber, and I then released the pull which I had been holding continuously. The bowl was thus left about one-third full and it subsequently gradually refilled up to the original level by a small stream passing from the float-valve by the bleeder pipe; this refilling took about one minute, so that the entire operation was comprised in about eighty seconds. Sometimes there was a second breaking of the vacuum through the bowl, occurring about seven seconds after the first breaking, but usually after the first breaking the water entered sluggishly and was siphoned out as fast as it entered. Considerable force was required to hold the pull, since the vacuum generated in the service box tended directly to pull down and close the upper or piston valve.

Complainants' Exhibit 20, single-charge injector tank, operated somewhat differently. The pull did not require to be held during

the operation, but could be released instantly after pulling. I timed it and found that the pull required to be held only one second, or possibly a little over; certainly less than two seconds. The outflow from the bowl did not start quite as quickly as with Exhibit 19, and was less violent. The outflow, however, was strong and carried out a wad of paper with apparently the same ease. The bowl was emptied and air drawn through it to break the vacuum in
342 five seconds after pulling. Thereafter the inflow of flushing water to the bowl was much more copious than with the tank, Exhibit 19, and the water seemed to enter the bowl faster for a time than it was siphoned out, until finally the siphoning force seemed to gather energy and suddenly drew out the remaining water from the bowl, whereupon by the entrance of air the vacuum was finally broken, which occurred at ten seconds after the first pulling. The bowl was then quietly and rapidly refilled in from ten to twelve seconds ensuing, so that the entire operation took from twenty to twenty-two seconds.

Q. 321. Please examine the tank, Defendant's Exhibit 14, now shown you, and state whether you have ever seen it in operation; and, if so, state where, when, and how it operated.

(Same objection.)

Ans. I tested this tank on the same occasion at Huber & Co.'s factory, and under the same conditions stated in the last answer. The operation was very similar to that of Complainants' Exhibit 19, except that there was a greater flow of water, owing to Defendant's Exhibit 14 being of greater capacity. I measured and calculated the capacity of the vacuum chamber of both these tanks, both by measuring the water coming from them and by a closely approximate calculation from measurement, and found that the vacuum chamber in Complainants' Exhibit 19 holds about three and a half gallons, while that of Defendant's Exhibit No. 14 holds about five and a half gallons or a little more.

At the tests of this tank, Defendant's Exhibit 14, a strong outflow from the bowl took place immediately after pulling the lever and continued until the end of five seconds, when the vacuum was broken, and the outflow then became very small, and continued thus for fifteen seconds more, the water flowing down the sides of the bowl and being drawn out as fast as it reached the outlet, so that there was no accumulation of water in the bowl. The operation usually came to an end in about twenty seconds, whereupon the pull which had been held for this time was released. The
343 bowl was then partly refilled by regurgitation, and was slowly refilled by the after-flow through the bleeder pipe, which took from one minute to a minute and a quarter to fully refill the bowl, so that the entire operation consumed from eighty to ninety-five seconds or thereabouts. One test was made to determine how long the pull must be held to fully empty the vacuum chamber, and we found that it required thirty-five seconds for all the water to run out of this chamber, so that the vacuum-producing action ceased.

Q. 322. Please examine Complainants' Exhibit Trombe Tank, and state whether or not you have ever operated or tested this tank; and, if so, state when and where and how it operated.

(Same objection.)

Ans. This Trombe tank was tested by me under precisely the same conditions as the other three tanks referred to and described in my last two answers, and the tests were made at the same time and place.

This Trombe tank having been connected with the same pipes and the same bowl as the other tanks, it was subjected to several tests. Its operation varied somewhat in duration according to the time during which the pull was held after being pulled. I found that for a complete operation it was necessary to hold the pull for three seconds or very nearly so. When I released the pull, at exactly three seconds, the siphoning of the bowl was completed at the end of five seconds, so that the air was drawn out, after which there was a rapid outflow of water into and through the bowl, the water being siphoned out nearly as fast as it entered, and air being drawn out with it until the end of ten seconds, when the vacuum was finally broken and the bowl began to refill, the after-wash for refilling the bowl continuing until the end of twenty seconds from the time the pull was first operated, when the flow ceased, leaving the bowl full.

Adjourned by consent until September 11th, at ten o'clock a. m.

344 NEW YORK, *September* 11, 1888.

Met pursuant to adjournment.

Present: Same parties as before.

Direct examination of Mr. FRASER continued by Mr. BROWNE:

Q. 322. Please compare Defendant's Exhibit No. 14 with Complainants' Exhibit Trombe Tank, referring particularly to the action of the water in the water-closet bowls and traps with which these tanks are connected when in operative condition.

Counsel for defendant objects to the question as irrelevant, incompetent, and immaterial; also as calling for evidence not in the nature of rebuttal; also as having been gone into by the same witness when Fraser gave his testimony-in-chief.

Ans. Besides the difference in the time which the flushing operation takes, the operation of these two tanks in the effect of the water in the bowl differs considerably. With Defendant's Exhibit No. 14 the water is siphoned from the bowl much more suddenly than with the Trombe tank, and the first breaking of the vacuum occurs somewhat sooner. Subsequently the flow of flushing water into the bowl is very much restricted with Defendant's Exhibit 14 as compared with the Trombe tank, which gives a copious flush. With the Trombe tank the water enters the bowl faster than it leaves it until the suction accumulates sufficient energy to draw out the accumulated mass of water with a rush at the close of the siphoning ac-

tion, while with the Defendant's Exhibit 14 tank there is no accumulation of water and no subsequent copious outflow or flooding. I tested the two tanks with wads of paper thrown into the bowl, the same sized sheet of paper being used in each instance and crushed loosely into a wad of the same size. A small wad was carried
345 out easily by the first siphoning action with both tanks, but a wad just large enough to somewhat choke the outlet and avoid being carried out by this first siphoning was not carried out at all when Defendant's Exhibit No. 14 was used until the tank was operated or pulled a second time, whereas with the Trombe tank a wad of the same size was carried out toward the end of the one flushing operation by the final flood of water to which I have referred. I attribute considerable practical importance——

I, counsel for defendant, object to what the witness considers as of practical importance. He is not a water-closet man and what he may consider is of no consequence in this case and has no right to be injected in this record.

(Witness continuing:)—to this copious flood toward the end of the flushing, because it has the effect of carrying through the lower trap those solid matters which have been carried out of the bowl by the first siphoning action, and which, in the absence of a copious wash or flush, would be apt to remain in the lower trap and might thereby vitiate the air between the two traps.

I may add, with reference to my practical experience with these closets, that I have used a Cascade closet with a Trombe tank in my residence for about two years last past and have carefully noted its operation under various conditions.

Q. 323. Please state whether or not you have made any experiments to show the action of the air in the water-closet bowl and its connecting parts when the complainants' Trombe tanks are used with said bowl and when the closet is in operation; and, if so, please state the results of such experiments and the conclusions that you draw therefrom.

Counsel for defendant objects to the question as calling for evidence which is irrelevant and incompetent and not in the nature of rebuttal; as absolutely shifting the case from the one plaintiffs attempt to make in their direct evidence and as an attempt to
346 make the hired solicitor and counsel who is conducting this case for plaintiff- perform the functions of the judge.

Ans. I have made an experiment with the Cascade closet having a Trombe tank to ascertain the course and direction of the currents of air in the bowl. I covered the top of the bowl with a sheet of stiff paper, forming a diaphragm or drum-head, the sides of which were held hermetically against the rim of the bowl by wetting the paper and pressing it into close contact therewith. In the centre of this paper diaphragm I cut a hole of about one and a half inches diameter. I took an ordinary candle, lit it and held it so that its flame was close above this hole. I then operated the tank, holding the pull for three seconds. The first effect was to blow the flame

slightly upward, which continued about two seconds, and which ceased when the water was heard entering the bowl. This effect was due to the water descending the flushing pipe forcing the air therefrom into the bowl. It is an effect that takes place with every closet which has an elevated tank and a flushing pipe leading down therefrom to the bowl and vented to the outer air, so that when at rest the flushing pipe is filled with air. After this upward current ceased the flame was undisturbed for probably two or three seconds; then, as I heard the sound of the water being siphoned out of the bowl, the flame became agitated and was immediately drawn down through the hole and extended down apparently three inches or thereabouts within the bowl, showing that there was a considerable down draft of air into the bowl, occasioned by the siphonic outflow and by the drawing of air from the bowl through the upper trap. This drawing down of the flame continued for about two seconds, as nearly as I could judge. When the siphoning sound ceased the flame instantly resumed its normal condition, and immediately thereafter was slightly blown up by the expulsion of air from the bowl during the refilling thereof by the after-wash wherein the entering water displaced the air. This experiment,
347 which I have repeated several times, shows that there is first an outflow of air from the bowl; second, an indraft of air into the bowl, and, third, a further outflow of air from the bowl, and it shows that the second effect, or drawing in of air, is more powerful and is to all appearance of greater volume than either of the other two.

I have tried the same experiment, under precisely the same conditions, except that I held the pull for five seconds instead of three, the result of which was that the indraft of air was so much stronger that it extinguished the candle, and this extinguishment occurred before the cessation of the siphoning action.

Q. 324. Please examine the tank now shown you, being Complainants' Exhibit No. 24, collapsed tank, and state whether or not you have previously examined it, and, if so, when, where, and under what circumstances, and its condition at the times you may have seen it.

Counsel for defendant asks counsel for complainant- if he claims that this is legitimate rebutting testimony and if he is offering it as such; to which counsel for complainant- answers that, in his opinion, the purpose for which this exhibit is introduced is solely and exclusively for rebutting evidence introduced by the defendant in this case concerning the Peters & Donald closet.

Mr. Taylor says: You do not claim, Mr. Browne, under the notice given and the stipulation which we signed to take testimony before Mr. Gavin, that you have the right to take any other testimony other than rebutting testimony, do you? And was it not so understood that it was to be limited strictly to rebutting testimony?

Counsel for complainant- states that he understood that only rebutting testimony can be here introduced.

348 Ans. I first saw this tank on or about August 17th or 18th, 1888, at Henry Huber & Co.'s factory. At that time it was

fitted up with the various levers, valves, pipes, etc., which are now part of Complainants' Exhibit No. 19. It was set up in connection with a Cascade bowl and operated, and its operation was the same as that of Complainants' Exhibit 19. This operation was in the presence of Mr. J. A. C. Teppe, the superintendent of the factory, and of Mr. Murphy, a plumber, and of others.

The next time I saw this tank was at the same factory on September 6th, last, when it was in its present condition.

Counsel for defendant objects to the question and testimony just given as irrelevant and immaterial and as not being rebutting testimony.

Q. 325. In what manner can you account for the condition of the lower portion of the tank, Complainants' Exhibit No. 24?

(Same objection.)

Ans. In only one way—that the sheet metal was collapsed by the existence of a vacuum within the lower chamber or service box of the tank, the vacuum having been so great that the resulting strain tending to draw the sheet metal inwardly was greater than the strength of the sheet metal and its fastenings could resist.

Q. 326. Have you read the testimony heretofore given in this case on behalf of the defendant by Prof. Calvin N. Woodward?

Ans. Yes.

Q. 327. Please explain that portion of the specification of Boyle's reissued patent No. 10826, sued on in this case, which is contained on page 3, commencing with line 26, which is referred to by Prof. Woodward in his answer to question 46.

Counsel for defendant object to the question as irrelevant and incompetent. It is for the court to read and interpret specifications and not for this witness, though he wrote the specification. If the same is clear and perspicuous, as the law requires specifica-
349 tions to be, the court can certainly understand and interpret it. If vague, obscure, and uncertain, what this witness meant when he wrote it is not competent as casting a light upon it or reading something into the specification not already in.

Ans. Prof. Woodward, in that answer, holds the statement to be inaccurate that the water from the passage *t* will, upon the opening of the valve, run out more rapidly than the water from the chamber F. While I consider it quite immaterial which flows the more rapidly, yet I think I can make it clear why the water from the passage *t* should run out the faster.

By Mr. TAYLOR: The witness having stated that it is immaterial whether the water runs out faster or not, all testimony which he may attempt to give or make clear is manifestly immaterial to the issues of this case, according to the opinion of the expert himself. Counsel therefore objects as a waste of time to any attempt of the kind on the part of the witness.

Ans. (Witness continuing:) The reason is that the water from the

passage *t* has a larger and less obstructed outlet in its flow to the flushing pipe than the water from the chamber F. It is stated that the annular space between the valve *j* and outlet opening *i* is about the same as of the orifice *i* in Fig. 1. (See specification, page 3, lines 5 to 8.) Turning to Fig. 1, it is seen that the diameter of the flushing pipe *l* is considerably greater than that of the orifice *i*, and its area is consequently also greater in the same proportion. Now, turning back to Fig. 5, it is seen that when the valve *j* is lifted the water standing in the passage *t* can escape by a passage of the full area of the flushing pipe, while the water in the chamber F can escape only by a passage of the lesser area of the annular space around the valve. The head of water being the same in both cases, it follows that the water flowing out through the larger opening will flow the faster.

350 Q. 328. Please state whether or not in the operation of water closets and tarks constructed in accordance with Fig. 1 of the Boyle reissue patent sued on the bowl can ever be left empty.

(Objected to as leading, as suggestive, as irrelevant and incompetent, as calling for testimony not in the nature of rebuttal.)

Ans. It is impossible in the operation of such a closet for the bowl ever to be left unsealed. The water might evaporate from the bowl if left standing a long time, or it might be withdrawn artificially, but the operation of the tank can, under no circumstances, leave the bowl unsealed.

Q. 329. Why cannot the bowl be left unsealed?

(Same objection.)

Ans. Because under any circumstances the after-wash will refill it. Assuming that the valve is held open long enough only to let enough water into the chamber F to not quite submerge or seal the bottom of the air ball *n*, no vacuum will be produced, because this water, in running out through the injector I, will draw air along with it, not from the air pipe *e*, but from the external air through the vent pipe *f* and under the bottom of the air bell *n*. Hence the bowl will not be siphoned and the water admitted to the chamber F will simply run down into the bowl and will overflow from the bowl through the upper trap, leaving the bowl full.

A little longer pull, which holds the valve *h* open long enough to admit enough water into the chamber F to seal the air bell *n*, will enable the siphoning action to commence, because the air drawn through the injector by the outflowing water will be drawn from the air pipe *e* and confined air space *d* just as long as the air bell *n* remains sealed. If this suction continues long enough it will siphon the bowl, but whether it does or not the suction will cease instantly when enough water runs out to unseal the bottom of the air bell so that air can enter beneath it to break the vacuum, and all the remaining water, which is the same in volume as for the complete after-wash, will flow down into the bowl and refill it.

351 The same result ensues whether the insufficient flush be due to giving too short a pull or be due to the attempt to operate the closet when there is not sufficient water remaining in the reservoir tank E. I have repeatedly experimented with the Trombe tank under both conditions, and always with the same result, that the bowl was invariably left full of water. Thus theory and practice agree in this respect.

Q. 329½. Please state whether or not, in the operation of a tank constructed in accordance with the specifications and drawings of the Peters & Donald patent, No. 260,232, as for example Defendant's Exhibit 14, there would ever be any danger of leaving the bowl unsealed.

(Objected to as not rebutting testimony, as irrelevant and incompetent.)

Ans. In my opinion the operation of such a tank would never, of itself, leave the bowl unsealed, but it might leave it so insufficiently sealed that if left for a comparatively short time the loss by evaporation would unseal it. For example, if the supply of water were shut off from the house and the closet were then operated the outflow of water from the vacuum chamber would create a suction and siphon the bowl, but upon releasing the pull there would be no after-wash to refill the bowl, for the reason that there would be no inflow of water at the float-valve to replenish the tank and consequently no water would be diverted by the bleeder pipe and carried down to the bowl. The bowl then would be left with only as much water as had regurgitated from the up leg of the upper trap upon the cessation of the suction, with the addition of the last dribble from the flushing pipe. The same result would follow if the water supply were temporarily shut off by the drawing of water on a lower floor of the building, but in this case the disadvantage would be only temporary, because the bowl would be refilled upon the resumption of the flow.

Q. 330. Please state whether or not, at the date of the grant of letters patent No. 291,139 of James E. Boyle, which is the original of the reissued patent sued on in this case, there were any
352 devices known in the art for the prevention of the passage of air through the flushing pipe leading from the water-closet tank to the water-closet bowl.

Counsel for defendant objects to the question as leading and as incompetent, in that it assumes that a mere patent solicitor is possessed of all knowledge extant in the arts relating to or germane to the idea embodied in the question; also because the testimony sought is not in the nature of rebutting testimony; also because all this witness is capable of stating would be what he knew and not what others wiser and better informed may have known about it.

Ans. There were such devices. An example of one such device will be found illustrated in the patent of James E. Boyle, No. 291,140, dated January 1st, 1884, a copy of which I here produce. This patent shows a trap or water seal in the flushing pipe, at its

junction with the bowl, the object of which is stated in the specification to be "in order that such foul gases as may accumulate in the flushing chamber of the tank overhead may not descend through the flushing pipe and enter the bowl, thereby vitiating the air of the room." (See page 2, lines 93 to 97.)

The Patent Office copy referred to by the witness of letters patent No. 291,140, granted to James E. Boyle, is hereby offered in evidence by counsel for complainant- and is marked Complainants' Exhibit No. 25, trapped flushing pipe patent.

Counsel for defendant objects to the answer of the witness, and also to the introduction of said patent in evidence, because the same is not rebutting testimony nor in the nature of rebutting testimony, and counsel give notice that they will either move to have all testimony relating thereto expunged or else for leave of court to
353 take additional testimony on the part of the defendant to meet and rebut this new matter now injected into the case.

Adjourned by consent to Wednesday, September 12th, at 10 a. m.

NEW YORK, *September 12th*, 1888.

Direct examination of Mr. FRASER continued by Mr. BROWNE:

Q. 331. Please state which, in your opinion, would be the better flushing pipe to be used with a Trombe tank, a flushing pipe like that shown in the reissued patent sued upon or a trapped flushing pipe such as shown in Figs. 2 or 5 of letters patent No. 291,140, Complainants' Exhibit No. 25, and state the reasons for your conclusions.

Counsel for defendant desires counsel for complainant- to state what part of defendant's testimony this evidence is claimed to rebut.

Counsel for complainant- states that the evidence sought to be introduced at this point is in rebuttal of the statements made by each of the witnesses who testified on behalf of the defendant in reference to an alleged defect in the water-closet shown and described in the Boyle reissue patent, and to an alleged inferiority of the water-closet shown and described in the Boyle reissue patent, as compared with the water-closet shown and described in the Peters & Donald patent, owing to, as contended by said witnesses, there being a passage from the confined air space between the two traps of the water-closet bowl up through the air pipe leading from said air space to the upper part of the tank and thence down through the air bell, which
354 covers the upper end of said air pipe, through the service box and through the pipe *t* as lettered in the Boyle reissue patent, and thence down through the flushing pipe into the interior of the bowl above the water surface in the bowl.

Counsel for defendant says that such evidence is not rebuttal; no such construction as shown in patent 291,140 is shown or described in the Boyle reissue patent, and the comparison was made by defendant's witnesses between the defective and inadequate construction of the Boyle closet, shown and described in said reissue, as com-

pared with the extinguished patent, which was common property at the time this suit was begun—I mean, of course, the Peters & Donald construction—and complainant cannot invoke the assistance of another and different patented improvement to supply manifest and gross defects in the closet shown and described in the Boyle reissue sued upon.

Ans. I consider an open, untrapped flushing pipe preferable, with the Trombe tank, to a trapped pipe, for the reason that such an open pipe may be utilized as a "local vent" for the bowl, whereas, if a trapped flushing pipe be used, the "local venting" of the bowl can only be accomplished by running an entirely distinct pipe from the bowl, an expense which is saved by leaving the flushing pipe open or untrapped. The open flushing pipe serves as a local vent pipe during all the time that the flushing tank is not in actual operation—that is, by connecting the vent pipe lettered *f* in the Boyle reissue to a chimney or hot-air flue, or by extending it to the roof under such conditions that an up draft through it is induced, there is a continual flow of air from the bowl into and up through the flushing pipe, through the flushing chamber F and up
355 the vent pipe *f*. This local vent is advantageous in drawing out of the bowl the odors generated in use, so that the closet is rendered odorless to greater or less extent.

Q. 332. Please compare the apparatus shown in the Peters & Donald patent with the apparatus shown in the Boyle reissue patent, having reference to the amount of water discharged therefrom into the bowl at each operation or use of the closet. I mean as to the regularity of the amounts of water discharged by the apparatus shown in each patent, assuming that the several service boxes have the same cubical contents.

Ans. In each of the constructions shown in the single figure of the Peters & Donald patent and in the several figures of the Boyle reissue the amount of water discharged will depend upon the length of time that the pull cord or chain attached to the lever is held down, with the single exception of the construction shown in Fig. 4 of the Boyle reissue, in which construction a uniform flush will be given if only the lever be fully pulled down each time, the flush commencing upon the release of the lever and continuing for a uniform duration, depending upon the adjustment of the slow-closing valve.

Next to this, the nearest approximation to a water-measuring device is that shown in Fig. 5 of the Boyle reissue. If the pull-chain *c* is connected to the seat of the closet, as is usual in flushing apparatus of this kind, I mean those having two alternately acting valves, the flushing chamber F will be filled while the seat is depressed, and assuming that the seat is always depressed long enough to fill this chamber the flush will always be of uniform volume.

Next to this, the nearest approach to a water-measuring device is the construction shown in Figs. 1, 2, and 3 of the Boyle reissue. With this construction, if the pull be held long enough to fill the flushing chamber F, the flush will be substantially uniform, be-

junction with the bowl, the object of which is stated in the specification to be "in order that such foul gases as may accumulate in the flushing chamber of the tank overhead may not descend through the flushing pipe and enter the bowl, thereby vitiating the air of the room." (See page 2, lines 93 to 97.)

The Patent Office copy referred to by the witness of letters patent No. 291,140, granted to James E. Boyle, is hereby offered in evidence by counsel for complainant- and is marked Complainants' Exhibit No. 25, trapped flushing pipe patent.

Counsel for defendant objects to the answer of the witness, and also to the introduction of said patent in evidence, because the same is not rebutting testimony nor in the nature of rebutting testimony, and counsel give notice that they will either move to have all testimony relating thereto expunged or else for leave of court to
353 take additional testimony on the part of the defendant to meet and rebut this new matter now injected into the case.

Adjourned by consent to Wednesday, September 12th, at 10 a. m.

NEW YORK, *September 12th*, 1888.

Direct examination of Mr. FRASER continued by Mr. BROWNE:

Q. 331. Please state which, in your opinion, would be the better flushing pipe to be used with a Trombe tank, a flushing pipe like that shown in the reissued patent sued upon or a trapped flushing pipe such as shown in Figs. 2 or 5 of letters patent No. 291,140, Complainants' Exhibit No. 25, and state the reasons for your conclusions.

Counsel for defendant desires counsel for complainant- to state what part of defendant's testimony this evidence is claimed to rebut.

Counsel for complainant- states that the evidence sought to be introduced at this point is in rebuttal of the statements made by each of the witnesses who testified on behalf of the defendant in reference to an alleged defect in the water-closet shown and described in the Boyle reissue patent, and to an alleged inferiority of the water-closet shown and described in the Boyle reissue patent, as compared with the water-closet shown and described in the Peters & Donald patent, owing to, as contended by said witnesses, there being a passage from the confined air space between the two traps of the water-closet bowl up through the air pipe leading from said air space to the upper part of the tank and thence down through the air bell, which
354 covers the upper end of said air pipe, through the service box and through the pipe *t* as lettered in the Boyle reissue patent, and thence down through the flushing pipe into the interior of the bowl above the water surface in the bowl.

Counsel for defendant says that such evidence is not rebuttal; no such construction as shown in patent 291,140 is shown or described in the Boyle reissue patent, and the comparison was made by defendant's witnesses between the defective and inadequate construction of the Boyle closet, shown and described in said reissue, as com-

pared with the extinguished patent, which was common property at the time this suit was begun—I mean, of course, the Peters & Donald construction—and complainant cannot invoke the assistance of another and different patented improvement to supply manifest and gross defects in the closet shown and described in the Boyle reissue sued upon.

Ans. I consider an open, untrapped flushing pipe preferable, with the Trombe tank, to a trapped pipe, for the reason that such an open pipe may be utilized as a "local vent" for the bowl, whereas, if a trapped flushing pipe be used, the "local venting" of the bowl can only be accomplished by running an entirely distinct pipe from the bowl, an expense which is saved by leaving the flushing pipe open or untrapped. The open flushing pipe serves as a local vent pipe during all the time that the flushing tank is not in actual operation—that is, by connecting the vent pipe lettered *f* in the Boyle reissue to a chimney or hot-air flue, or by extending it to the roof under such conditions that an up draft through it is induced, there is a continual flow of air from the bowl into and up through the flushing pipe, through the flushing chamber F and up
355 the vent pipe *f*. This local vent is advantageous in drawing out of the bowl the odors generated in use, so that the closet is rendered odorless to greater or less extent.

Q. 332. Please compare the apparatus shown in the Peters & Donald patent with the apparatus shown in the Boyle reissue patent, having reference to the amount of water discharged therefrom into the bowl at each operation or use of the closet. I mean as to the regularity of the amounts of water discharged by the apparatus shown in each patent, assuming that the several service boxes have the same cubical contents.

Ans. In each of the constructions shown in the single figure of the Peters & Donald patent and in the several figures of the Boyle reissue the amount of water discharged will depend upon the length of time that the pull cord or chain attached to the lever is held down, with the single exception of the construction shown in Fig. 4 of the Boyle reissue, in which construction a uniform flush will be given if only the lever be fully pulled down each time, the flush commencing upon the release of the lever and continuing for a uniform duration, depending upon the adjustment of the slow-closing valve.

Next to this, the nearest approximation to a water-measuring device is that shown in Fig. 5 of the Boyle reissue. If the pull-chain *c* is connected to the seat of the closet, as is usual in flushing apparatus of this kind, I mean those having two alternately acting valves, the flushing chamber F will be filled while the seat is depressed, and assuming that the seat is always depressed long enough to fill this chamber the flush will always be of uniform volume.

Next to this, the nearest approach to a water-measuring device is the construction shown in Figs. 1, 2, and 3 of the Boyle reissue. With this construction, if the pull be held long enough to fill the flushing chamber F, the flush will be substantially uniform, be-

cause, since the inlet valve seat is stated in the specification to be of sixteen times the area of the outlet orifice *i*, the water will enter at least sixteen times as fast as it will run out, less only the re-
356 sistance due to the escape of the air from the chamber F. Hence, if only the pull is held long enough to fill the chamber, the quantity of water used will not be changed in any considerable proportion by holding the valve open longer, since this will add to the flush only the volume of water that can run out down the flushing pipe.

In the Peters & Donald construction the flushing operation starts with the flushing chamber or service box full of water and the discharge from the service box to form the flush continues as long only as the pull is held until all the water has run out. No more water can be used at one operation than the capacity of the service box plus the after-wash, but by holding the pull too short a time there may be much less water used. Hence the Peters & Donald tank is not a water-measurer, but is a water-waste preventer. The Trombe tank is approximately a water-measurer, but is not a waste-water preventer.

Counsel for defendant objects to the last question and answer thereto on the ground that it is irrelevant and immaterial to the issues of this case.

Q. 333. Please compare the tank shown in the Peters & Donald patent with the tank shown in Fig. 1 of the Boyle reissued patent, pointing out and numbering the several parts which they have in common and the several parts which each has which the other has not.

Objected to by counsel for defendant as irrelevant and immaterial to the issues of this case, whether the construction shown in Fig. 1 contains parts not shown or described in the Peters & Donald patent or not. The question is also objected to as not being testimony in rebuttal.

Ans. I understand the question to call for a count of the number of parts in the two structures referred to. In making such a count it is important to carefully compare those elements which they have in common and separate them from those which each has
357 peculiar to itself. It is always difficult to tell just what parts should be counted separately and what should be counted in groups or ignored altogether. Thus it would be manifestly unfair to count every link of a chain or every screw used merely to connect parts together; but where parts are common to the two structures it makes little difference how much or how little into detail the count is carried. Proceeding upon these principles I have classified and counted the parts in these two structures in the way that seems to me most fair and with the following result:

The parts common to both are, 1, a reservoir tank; 2, a flushing chamber or service box; 3, a float-valve, including its float, stem, shell, and valve proper; 4, the water-supply pipe and its connections for joining it to the tank to supply water to the float-valve;

5, the flushing pipe and its connections to the tank; 6, the operating lever with its pivot or fulcrum bearing and the pull cord or chain; 7, the valve between the reservoir and the service box; 8, the valve stem or chain connecting this valve to the operating lever; 9, the air pipe and its connections to the tank (including the separate lengths or joints in the Peters & Donald and the brass upper pipe within the tank lettered *e* in Fig. 1 of the Boyle reissue), and 10, the vent pipe and its connections.

In the Peters & Donald patent there are in addition the following parts not found in the Boyle reissue, viz: 11, the valve H at the outlet from the service box; 12, the chain 9 connecting this valve to valve 11; 13, the check-valve 16; 14, the bleeder pipe 15 and its connections at both ends; 15, the cylinder in which piston rod 11 works, and 16, the stop-cock in the air pipe 5 between the check-valve and the junction of the pipe with the service box.

The construction shown in Fig. 1 of the Boyle reissue has in addition to the ten parts first named the following parts not found in the Peters & Donald, viz: 11, the upward extension F′ of the service box; 12, the air bell *n*; 13, the intermediate tube *r*; 14, the injector casting G, and 15, the cup *m′* for trapping the bot-
358 tom end of the tubular valve stem *m* which constitutes the overflow. This tube *m* I have already counted under No. 8.

It may be said that the stop-cock in the Peters & Donald air pipe which I have counted as No. 16 should not be counted, as it is not essential and might be omitted; but if this be true it would be equally proper to omit the cup *m′* from the Boyle construction, as this cup is used only as a part of the overflow, and the overflow might, with as much propriety, be omitted from the Boyle tank as it has been from the Peters & Donald tank which has no overflow. Hence, whether these parts be counted or not in the respective structures, my conclusion is that the construction shown in Fig. 1 of the Boyle reissue has essentially one less part than the construction shown in the Peters & Donald patent.

Adjourned by consent to September 13th, at 10 o'clock.

NEW YORK, *Sept. 13th*, 1888.

Met pursuant to adjournment.

Present: Same parties as before.

Direct examination of Mr. A C. FRASER continued by Mr. BROWNE:

Q. 334. In case both the water-closet as shown and illustrated in the Peters & Donald patent and the closet shown and illustrated in Fig. 1 of the Boyle reissue patent were properly set up and in condition for use, and if a quantity of water were thrown into the bowl of each closet without any operation of the flushing apparatus—for example, as if a bucket of slops should be thrown into each bowl—what difference in effect, if any, would there be in the action of each closet under these circumstances?

(Objected to as irrelevant, incompetent, and immaterial.)

Ans. In both cases the pouring in of water would raise the
359 level of water in the bowl and cause an outflow of water through the bowl and through the upper trap, and consequently into and through the lower trap. The pouring over of the water from the upper trap will carry with it some of the air from the confined air space, and will carry more or less of this air out through the lower trap, thereby leaving a partial vacuum in the confined air space. With the construction shown in Fig. 1 of the Boyle reissue this partial vacuum will be immediately overcome by the drawing in of air from the chamber F and flushing pipe *l* through the air bell *n* and passage *t* and down the air pipe *e*. Hence no water will be siphoned out of the bowl.

With the construction shown in the Peters & Donald patent, however, inasmuch as the air pipe 5 is not vented while the closet is at rest, no air can enter through this air pipe to overcome the partial vacuum in the confined air space (unless perchance there should be a leakage through the check-valve 16, which leakage could hardly be sufficient in any event to admit enough air to change the result perceptibly), and consequently the partial vacuum produced in the confined air space will be effective to siphon water from the bowl. The quantity of water that will be siphoned out will depend on the degree of vacuum produced, and this in turn will depend upon the quantity of water poured into the bowl and the suddenness with which it is poured in. In my opinion the pouring in of a large bucket of slops suddenly would be sufficient to produce such a degree of rarefaction as would siphon the water out of the bowl until its level was so far reduced as to take in air and break the vacuum, which would leave the bowl with only as much water as would regurgitate from the up leg of the upper trap, and this might leave it unsealed.

I know by practical test that the dashing in of a bucket of water does not siphon the Trombe closet; but I have never made any such test with the Peters & Donald.

Direct examination of Arthur C. Fraser closed.

360 Cross-examination of ARTHUR C. FRASER by Mr. TAYLOR:

X Q. 335. You are the same Arthur C. Fraser who testified in chief in this case?

Ans. Yes, sir.

X Q. 336. You are the same person who solicited the Boyle patent, of which the reissue is the one sued upon?

Ans. Yes, sir.

X Q. 337. You are the same person who solicited the reissue patent sued upon, are you not?

Ans. Yes, sir.

X Q. 338. How many years have you been a patent solicitor for James E. Boyle?

Ans. To the best of my recollection, about ten years.

X Q. 339. When did you begin experting or giving expert testimony?

Ans. I think about a year and a half or two years ago.

X Q. 340. Was it in a water-closet case?

Ans. I do not distinctly remember. I think the first case in which I testified was either a water-closet case or a razor case; I don't remember which.

X Q. 341. Who employed Prof. Morton as expert in this case?

(Objected to as incompetent, irrelevant, and immaterial.)

Ans. I understand that Huber & Co. employed him.

X Q. 342. Who first spoke to Prof. Morton about testifying in this case?

(Same objection.)

Ans. I do not know.

X Q. 343. Did you not do it?

(Same objection.)

Ans. I did not see Prof. Morton in this case until after he had been talked with about it by Mr. Browne.

X Q. 344. Did you not write to Prof. Morton asking him to become a witness in this case?

(Same objection.)

Ans. I wrote Prof. Morton, at Mr. Browne's request, asking him to make an appointment with Mr. Browne.

X Q. 345. Did Mr. Browne request you to make that request?

361 (Same objection.)

Ans. He did.

X Q. 346. Do you refer to Mr. Arthur S. Browne, who appears as counsel in this case?

(Same objection.)

Ans. I do.

X Q. 346½. Has Mr. Browne a business connection with you?

Same objection; and, further, that this matter has already been gone fully into by the counsel for defendant in their own testimony when they called Mr. Fraser as a witness in their own behalf.

Defendant's counsel says that Mr. Fraser was asked the same questions when defendant's testimony was taken in order to show the intense interest on the part of Mr. Fraser in the management of this case, to show his equivocal relation as counsel, he, in this case, acting as solicitor, as expert, and chief manager of the case, which counsel then claimed and now claims utterly unfits the witness for giving an unbiased opinion.

Counsel for complainant objects to statements of counsel for defendant as being an attempt unwarranted by anything shown in the record to discredit a witness, whose reasons stated by him in reference to every question asked him show conclusively that the testimony he has given and the facts which he has stated are absolutely true.

By Mr. TAYLOR: If Mr. Arthur C. Fraser, the chief manager of this case, had desired to argue the case as a counsel, he might have done so in a brief and not under the guise of a disinterested witness, which the record shows he is not.

Complainants' counsel states that the record shows that the witness is thoroughly disinterested and has no connection whatever as counsel in this case.

362 Ans. Before answering this question I desire to remark that the statements of defendant's counsel in reference to my alleged interest and disqualifications as a witness do me grave and serious injustice, and I desire to here enter on the record my emphatic protest against them, and to state that I have not one dollar's worth of interest in the result of this litigation; that I am not the counsel in the case, nor the chief manager, nor any manager in the case, as counsel states, and that the only sense in which I can properly be called solicitor is that I have acted in the past as a patent agent or patent solicitor in procuring the patents of James E. Boyle and Peters & Donald, sued on in this case, a fact which gives me no interest in the result of the litigation beyond the slight interest which a professional man always feels when the work of his hands is undergoing scrutiny before the courts. Such an interest as that is not such an interest as would tempt me to impair my reputation before the courts as a conscientious, truthful, and accurate scientific or mechanical expert. Such an attack upon me by counsel is something that in my experience is unprecedented and which I have never experienced at the hands of any attorneys who are accustomed to the conduct of patent litigations, and which is only to be looked for from attorneys utterly inexperienced in such litigations and who do not appreciate the fact, which is notorious, that the weight of the testimony of the scientific expert depends upon the value of the reasons that he gives in support of his statements and of the scientific accuracy of the statements themselves.

I will now answer the question. My answer is that my business relations with Mr. Brown are precisely as I stated them when asked on this subject by defendant's counsel at St. Louis in June last.

X Q. 347. Does not Mr. Browne's name appear on your door to this office, where the testimony is now being taken, as a partner?

(Same objection.)

Ans. It does; and on the stationery of my firm. As Mr.
363 Browne is, to a limited extent, a partner in the patent-soliciting business of my firm, his name is of course used with the names of the other partners.

X Q. 348. Have you testified in cases as expert where Mr. Browne was not of counsel?

(Same objection.)

Ans. I have.

X Q. 349. Name one case.

(Same objection.)

Ans. One such case is that of Frederick Kampfe *et al. vs.* Sidney A. Aloe *et al.* in the southern district of New York.

X Q. 350. Mr. Browne was not of counsel in that case?

(Same objection.)

Ans. Mr. Browne was not connected in any way with that case.

X Q. 351. Mr. Fraser, you were at St. Louis when defendant's testimony was taken, were you not?

(Same objection.)

Ans. I was.

X Q. 352. You were there assisting Mr. Bakewell, who appears as attorney for complainant- in this case, weren't you?

(Same objection.)

Ans. This ground has already been gone over in questions asked me at St. Louis and in my answers there given.

X Q. 353. And your replies are the same now?

(Same objection.)

Ans. Precisely.

X Q. 354. Is not Mr. Browne, whose name appears on your door as a partner, the counsel who is employed in all law cases that go through this office?

(Same objection.)

Ans. What do you mean by law cases coming through this office, Mr. Taylor?

X Q. 355. I mean all cases where you have occasion to recommend counsel—that is, cases in court?

(Same objection.)

Ans. No; I have had occasion to recommend the employ-
364 ment of several other patent lawyers besides Mr. Browne, and I have influenced clients to place cases in the hands of other lawyers, but I have usually of late recommended the employment of Mr. Browne when my advice was asked.

X Q. 356. Have you not constantly since his name has appeared on your door and on your stationery and he has held business relations with you?

(Same objection.)

Ans. Not in every instance.

X Q. 357. Did you not write the defendants at the instance of the complainants in this case that their construction was an infringement on what you claimed to be complainants' patents?

(Same objection.)

Ans. I have some recollection that a letter was sent from this office in reference to the alleged infringement prior to the commencing of this suit.

X Q. 358. Were you consulted by the complainants as to whether

or not you thought the defendant's construction infringed the patents?

(Same objection.)

Ans. I was.

X Q. 359. Then they consulted you as counsel in the matter, did they?

(Same objection.)

Ans. They consulted me as a patent expert.

X Q. 360. You conducted the correspondence, did you not, with the defendants in this case?

(Same objection.)

Ans. I remember that one letter was sent; I have no recollection of any other.

X Q. 361. You spoke of wads of paper being thrown in the water-closets at Henry Huber & Co.'s on the 6th of this month, when you say you saw them tested; what kind of paper was used?

Ans. A thin unsized manilla wrapping paper, a little thicker than what is commonly known as "Star" paper, and in sheets about two feet square, as nearly as I can remember.

X Q. 362. Is that the kind of paper generally used in water-closets by families for ordinary use here in New York?

365 Ans. Not so far as my knowledge extends, but it is a test that is, in my experience, habitually made to determine the action of a water-closet in carrying out matters deposited in the bowl.

X Q. 363. I believe you stated that you had a Trombe water-closet at your home, did you not?

Ans. I did.

X Q. 364. How long have you had it?

Ans. A little over two years, as near as I can remember.

X Q. 365. As an expert in water-closets what kind of paper do you recommend the use of in connection with water-closets?

Ans. I do not recommend the use of any and consider it a matter of individual taste.

X Q. 366. So far as you have yourself used any kind of paper, what kind have you used?

Ans. The kind I before referred to as "Star" paper I consider preferable.

X Q. 367. Well, is that the very thin paper?

Ans. Yes; very thin paper in small sheets, sold in packages.

X Q. 368. So far as you have observed the use of water-closet paper what kind is generally used by families that have and use these high-priced water-closets?

Ans. I have no knowledge of that, save that I suppose that the Star paper is the most generally used.

X Q. 369. So far as you know and have observed, do other persons use in connection with Trombe tanks and other tanks of these

high grades, or, rather, water-closets, the kind of paper that you have designated as water-closet paper?

Ans. It seems to me that these are foolish questions to ask a scientific expert. Any householder could give you as reliable information as I could on that subject.

By Mr. TAYLOR: You have undertaken to decry the utility and practical use of certain water-closets under the guise of
366 being an expert and knowing all about water-closets; I, therefore, certainly have the right to test you as an ordinary witness would be tested, and the fact that you profess to be a scientific expert is no shield.

By the WITNESS: I have testified as to certain definite tests or experiments made under parallel conditions with several different water-closet flushing apparatus. I consider that properly within the province of a scientific expert. I have not undertaken to testify as to what kind of water-closet paper is in general use by the multitudes using water-closets in this country, as I have no knowledge whatever on that subject any more than any person who occasionally travels and sees what sort of paper is provided for use in water-closets generally.

X Q. 370. So far as you have travelled around and observed where these Trombe water-closets are used and water-closets of this character, what kind of paper have you seen used?

Ans. I can only testify as to what I have seen provided for use, and I think that I have in most cases found no paper at all provided, and in those instances where paper was provided it has more frequently been newspaper than anything alse, but in some of the better closets—particularly those found in the best hotels—I have more frequently found thin paper of the nature of what is known as Star paper, or boudoir paper, provided.

X Q. 371. Have you seen in hotels or in any families where these high grades of closets are used ordinary newspapers used in connection with them?

(Objected to as irrelevant, immaterial, and trivial.)

Ans. I know that in my own experience I have frequently been forced to use newspapers in such places for want of something better.

X Q. 372. And when you have occasion to use them do you use a whole newspaper, as large as a N. Y newspaper, at once?
367 Ans. Well, hardly.

X Q. 373. Do you use or have occasion to use as much paper as would make a wad as large as an ordinary New York newspaper?

(Same objection.)

Ans. No; I don't think such a wad is ever used in practice; as I have already stated, it is simply employed as a test.

X Q. 374. Then, for practical use as a water-closet, using it purely as a water-closet, wads of this size would not be put in the bowl

after a person had used it for the purposes of a water-closet, would it?

(Same objection.)

Ans. Why, no; of course not.

X Q. 375. Do you mean to swear that the construction shown in the Peters & Donald patent and Defendant's Exhibit No. 14 is not amply adequate to carry off as much paper as you or any ordinary man would have occasion to use after using a water-closet?

Ans. I think in most cases it would carry off the ordinary amount of paper, but not in all cases.

X Q. 376. Will you give an instance where you have ever used paper after going to stool of such bulk and quantity as Exhibit 14, when set up properly, would not carry off?

Ans. It is not a question of the bulk of the paper, as a firm wad of paper is easier carried out than a lot of small floating pieces of paper. I have frequently had occasion to use so many pieces of paper that, in my judgment, the flow of water produced by this tank, Defendant's Exhibit No. 14, would have been insufficient to carry off all of it before the flushing operation ceases, but I think in most cases the paper would all be carried out.

X Q. 377. Have you ever tested, in ordinary operation, a closet identically like Defendant's Exhibit 14 as a water-closet—I mean for ordinary use?

Ans. No, sir; I have not.

368 X Q. 378. Then what you have stated about it not carrying out as many pieces of paper as you have sometimes had occasion to use is mere theory, is it?

Ans. You asked me for my judgment on that point and I have given it to you.

X Q. 379. No, I am now asking you whether it is mere theory that it would not carry as many pieces of paper as you have sometimes had occasion to use when you go to stool, or have had practical experience with Exhibit 14.

Ans. It is not mere theory. It is my judgment founded upon my experiments and observation of the action of the water-closet supplied by the tank, Defendant's Exhibit 14.

X Q. 380. Have you ever used a closet like Defendant's Exhibit 14 as a water-closet for ordinary use?

(Objected to as a needless repetition of what has just been answered.)

Ans. As before stated, I have not.

X Q. 381. Have you consulted with Mr. Browne about the testimony in this case since the rebutting testimony was begun to be taken at this office?

Ans. Yes, sir.

X Q. 382. Frequently?

Ans. Several times.

X Q. 383. Have you talked with him about the points upon which you have been examined?

(Objected to as incompetent, irrelevant, and immaterial.)

Ans. I have gone over with him the whole ground covered by my examination.

X Q. 384. Have you talked and consulted with Mr. Browne since you were sworn last Monday?

(Same objection.)

Ans. Only to this extent: in answering questions asked by Mr. Browne as to what I could testify to.

X Q. 385. Have you not suggested to Mr. Browne questions that ought to be put to you?

(Same objection.)

Ans. No, sir.

369 X Q. 386. Did you not consult with Mr. Browne as to what questions ought to be propounded to Prof. Morton?

(Same objection.)

Ans. No, sir; I think not. Mr. Browne asked me on some points whether I could testify to them with a view, as I understood, to determining whether he should question Prof. Morton about them.

X Q. 387. Has not Mr. Browne consulted with you as to the points on which he should examine Prof. Morton?

(Same objection.)

Ans. As to some of them I believe he has.

X Q. 388. Did you advise or suggest to Mr. Browne on what points he had better examine Prof. Morton?

(Same objection.)

Ans. I told Mr. Browne what points a chemist and scientist, such as Prof. Morton is, could probably testify to.

X Q. 389. Did you not suggest to Mr. Browne the extent and scope that his examination should take with Prof. Morton?

(Same objection.)

Ans. No, sir; I did not. I supposed that Mr. Browne was competent to attend to a thing of that kind himself.

X Q. 390. How often have you consulted with Mr. Browne since you were sworn last Monday in this case touching the scope of your evidence?

(Same objection.)

Ans. I don't think I have consulted with him at all touching the scope of my evidence.

X Q. 391. Have you not suggested to Mr. Browne what exhibits should be put in in rebuttal?

(Same objection.)

Ans. No; I don't think I have. Mr. Browne has asked me whether certain things could best be illustrated by making exhibits of them, and I have given him my opinion.

X Q. 392. Don't you call that consulting?

(Same objection.)

Ans. I call it answering questions.

370 X Q. 393. Who caused this tank to be made or who suggested the making of this tank called the collapsed tank, Complainants' Exhibit 24?

(Same objection.)

Ans. As far as I know, the history of that exhibit is this: Mr. Bakewell, I think it was, or Mr. Browne, I cannot remember which, first suggested that such a tank should be made, and I spoke to Mr. Boyle about it and told him what they wanted, and he said he would have it made. I next saw it at Huber's factory about August 17th, 1888.

X Q. 394. Did they speak to you personally about this matter?

(Same objection.)

Ans. My recollection is not clear, but I think Mr. Bakewell spoke of it to me while I was in St. Louis, and I know that Mr. Browne talked about it subsequently.

X Q. 395. Where was the notice for taking this testimony gotten up; at this office?

(Same objection.)

Ans. I don't know; I had nothing to do with the notice.

X Q. 396. Who suggested the making of Complainants' Exhibit 19, put in evidence in rebuttal?

(Same objection.)

Ans. As I understand it, the making of this exhibit was occasioned by the catastrophe that occurred to the Exhibit Collapsed Tank, and in my presence, at the factory of Huber & Co., on the sixth of this month, I heard Mr. Browne request Capt. Boyle to have another tank made and fitted up with the same valves, levers, &c., to take the place of the tank which had collapsed.

X Q. 397. Who requested you to go to the factory of Henry Huber & Co. on the 17th of August, 1888?

(Same objection.)

Ans. Mr. Browne asked me to go up there with him.

X Q. 398. Who requested you to go up there the 6th of September, 1888, if anybody?

(Same objection.)

Ans. Mr. Browne.

X Q. 399. Did you request Mr. Browne or did Mr. Browne request you?

371 (Same objection.)

Ans. Mr. Browne told me he was going up there and was to meet Professor Morton there, and he asked me to come, in order to be

present at the tests that were to be made. When I got there I found Mr. Browne and Professor Morton there.

X Q. 400. Is it not true that the correspondence from St. Louis during the entire taking of this case, between legal counsel there and the parties here, has been conducted through your office?

(Same objection.)

Ans. No, sir; it has not.

X Q. 401. Have you not been in correspondence right along with Mr. Bakewell about this case?

(Same objection.)

Ans. I have been in frequent correspondence with Mr. Bakewell, who has written to me whenever there has been any matter on which he desired information relating to the technical aspects of the case.

X Q. 402. Has he not corresponded with you in regard to the arrangement of this case and as to when and where testimony was to be taken?

(Same objection.)

Ans. He has written to me to know when it would be convenient for me to be examined, and as I was here and Mr. Browne was in Washington, he has on one or two occasions asked me to send to Huber & Co. and ascertain when the witnesses they were expecting to examine could be had.

X Q. 403. The correspondence for the employment of Mr. Bakewell was conducted by you, was it not?

(Same objection.)

Ans. I think I have already testified in St. Louis fully as to the employment of Mr. Bakewell.

By Mr. TAYLOR: Well, it will be easier and shorter for you to answer that than to not answer it.

(Question objected to by counsel for complainant as a needless repetition of testimony already given by the witness.)

X Q. 404. Was the employment of Mr. Bakewell effected through correspondence by you?

372 (Same objection.)

Ans. I had some correspondence with Mr. Bakewell before he was retained.

X Q. 405. Did you not act as the instrumentality through which he was employed?

(Same objection.)

Ans. No; I should say not. I was asked by Huber & Co. who was the best patent lawyer in St. Louis, and I made inquiry of some friends of mine, who spoke so highly of Mr. Bakewell that I told Messrs. Huber & Co. that he was probably the most competent pat-

ent lawyer they could find there, and they accordingly employed him.

X Q. 406. Did they instruct you to employ him or did they write to Mr. Bakewell?

(Same objection.)

Ans. They requested me to write to Mr. Bakewell and ascertain whether he was at liberty to accept the retainer.

X Q. 407. Did you so write to him?

(Same objection.)

Ans. I did.

X Q. 408. And such correspondence as has passed touching the employment of Mr. Bakewell has been conducted through you, so far as you know, hasn't it?

(Same objection.)

Ans. I don't know how much correspondence they have had with him directly. Some correspondence has passed through my office.

X Q. 409. Do you know if they have had any correspondence with Mr. Bakewell except that which has passed through your office?

(Same objection.)

Ans. As before stated, I do not. I know that some personal interviews have been had with Mr. Bakewell.

X Q. 410. Now, in regard to the employment of Mr. Browne. Was that employment effected through you?

(Same objection.)

Ans. Mr. Browne was employed by Henry Huber & Co. in reference to patent litigations long prior to the commencement of this suit.

373 X Q. 411. Was it in a water-closet case in which you were an expert that he was first employed by Henry Huber & Co.?

(Same objection.)

Ans. No; he was first employed in an interference litigation and subsequently in the same and other interferences, after they were carried into the courts, and in one of those subsequent proceedings I was called to testify as an expert.

X Q. 412. Have you not already testified in this case that Mr. Browne's employment was through your introduction and agency?

(Same objection.)

Ans. I do not recall the precise language I used, but it is a fact that I first suggested Mr. Browne's employment by Messrs. Huber & Co. in the first patent litigation in which he was employed by them, and his employment in this case, I suppose, grew out of his having acted for them before, and satisfactorily so, in the previous instance in which I had suggested his employment. In this par-

ticular case I think they consulted him, as a matter of course, because of his having acted for them before.

X Q. 413. When did you first see Complainants' Exhibit No. 20?

Ans. At Huber & Co.'s factory, on the 6th of the present month—that is, this identical exhibit.

X Q. 414. I believe you have already testified that you were paid for the services that you rendered at St. Louis when the defendant's testimony was being taken, have you not?

(Objected to as incompetent, irrelevant, and immaterial.)

Ans. Why, of course, having no interest in the subject-matter at issue or in the result of the litigation, I naturally would not go to the expense or take the time of going out to St. Louis without I were paid. I was paid my usual charges for time that I always make when I am employed on expert work.

X Q. 415. Were you paid in this case by the day or by the job?

374 (Same objection.)

Ans. By the day or hour, according to the time consumed.

X Q. 416. Does that include the time that you consumed in corresponding with counsel and making arrangements for their employment also?

(Same objection.)

Ans. I have been paid for whatever time I have devoted to this case—in doing expert work, in making experiments, studying the case and giving testimony on the stand—the same rates that I charge for such work whenever or for whomsoever I do it. The mere writing of ordinary letters I have never been in the habit of charging for to any of my clients.

Cross-examination continued by Mr. REX:

X Q. 417. In testifying in relation to the number of parts shown in the Peters & Donald closet, as described in the specification of the Peters & Donald patent sued on, and the parts shown in Fig. 1 of the Boyle reissue sued on in this case, you speak of the stop-cock between the valve 16 and the mouth of the pipe opening into the vacuum chamber. Will you please inform me whether or not that stop-cock is referred to in the patent as an essential part?

(Objected to by counsel for complainants, the patent specification itself being the best evidence as to what it sets forth.)

Ans. I do not find it in the specification.

X Q. 418. Is any function for such a stop-cock mentioned in the specification?

(Same objection.)

Ans. I do not find it in the specification.

X Q. 419. It should not, then, be included in making enumeration of the parts of that closet, should it, strickly speaking?

Ans. The enumeration was of the parts found in the construction shown in the drawing. For example, the vertical tube or cylinder in which the valve 11 works is not mentioned in the specification as being a separate part or piece from the tank or vacuum
375 chamber, as I remember it, but it is so shown in the drawing, and I therefore counted it.

X Q. 420. Its function is shown in the patent, is it not?

Ans. It is referred to in the specification as "a tube, 11 *a*, having an orifice or bore, *c*," but there is nothing in the description of the existence or function of this tube which indicates that it is essentially, or even preferably, a separate part or piece from the tank or flushing chamber.

X Q. 421. Then it might be made in one piece with the reservoir tank, might it not?

Ans. Yes, if the constructor were willing to have it made of iron, which would be subject to the disadvantage that it would rust and bind the piston valve fast or if the constructor were willing to make the entire upper part of the tank of brass or other metal which will not rust, but which would be very expensive.

X Q. 422. Is what you denominate as a stop-cock lettered in the drawing?

Ans. No.

X Q. 423. Is it named as a stop-cock in the separate specifications?

Ans. I have already stated that I am unable to find any reference to it in the specification.

X Q. 424. Are you absolutely certain that what you have referred to as a stop-cock is a stop-cock, from anything that appears in this patent?

Ans. To all appearance, the drawing shows a stop-cock; it might, however, be a check-valve, but a check-valve would defeat the operativeness of the tank, and therefore I conclude that it must be a stop-cock.

X Q. 425. The interior is not shown of what you denominate as a stop-cock, is it?

Ans. No, sir.

X Q. 426. Then you are simply guessing at what it is intended for, so far as appears from the drawing of the patent?

Ans. No; by my knowledge of mechanical drawing I can see by looking at it that it is either intended as a stop-cock or a
376 check-valve, and my reason shows me that it cannot be a check-valve, and therefore it must be a stop-cock, but whichever or whatever it is, it is a part distinct from the air pipe and is properly counted as such.

Counsel for defendant here requests counsel for complainant not to dictate answers such as he desires.

Complainants' counsel denies that he has made any remark whatsoever or given the witness any hint whatsoever as to any answer whatsoever.

X Q. 427. The stop-cock, if it is a stop-cock, might be introduced in pipe E in the Boyle reissued patent if it were intended or desired

to regulate the amount of air to flow through the pipe, might it not?

Ans. It might be, but it has not been.

X Q. 428. Has the cup *m'*, shown in Fig. 1 of the Boyle reissue patent, the function to perform which is pointed out in that patent?

Ans. Yes, sir.

X Q. 429. That function is not a necessary part of the function of an ordinary overflow pipe or waste pipe, is it?

Ans. No; the cup could be omitted without impairing the overflow, but if the overflow were omitted the cup would be useless; the cup is an auxiliary to the overflow.

X Q. 430. Is not the object of the cup simply to prevent air from flowing up through the overflow pipe?

Ans. Yes; or, as it is commonly expressed, it is to seal the overflow.

X Q. 431. You have enumerated as an essential part of the Boyle reissue, Fig. 1, what you call the injector casting G. You have not enumerated the nozzle *i*, have you?

Ans. No; as I do not understand it to be a separate part.

X Q. 432. Will you please look at the drawings shown in Complainants' Exhibit No. 2 and see if it does not appear that there is a separate part at that point?

377 (Witness examines exhibit.)

Ans. No; the nozzle *i* is simply a tubular flange extending down from the bottom of the service box and projecting into the casting G.

X Q. 433. It might or might not be made a separate part, might it?

Ans. It certainly might be made separate. The whole structure might be subdivided into as many parts as fancy or judgment might dictate.

X Q. 434. If it were desired that a portion of the water from the vacuum chamber of the Peters & Donald closet should enter the bowl, and partially fill it before the water was siphoned out of the bowl, that end could be accomplished by shortening the flushing pipe, couldn't it?

Ans. No; I think not; because the outflow of the flushing water is accompanied inevitably by the creation of a vacuum, which would tend to siphon the bowl, and this tendency would be in proportion to the rarefaction of the air, which would itself be proportional to the capacity of the air space below and extending up through the air pipe and that formed in the vacuum chamber by the running out of the water, and the extent of the rarefaction would be limited by the height of the column of water. Any shortening of the flushing pipe would involve bringing the tank and bowl nearer together and thereby shortening the water column. The pipe might be so short in proportion to the depth of the seal of the traps that the rarefaction occasioned by the descent of the water would be insufficient to siphon the bowl at all, in which case the flushing water would reach the bowl before it was siphoned out. This is, of course, an

extreme case, but any shortening between this and the proportions which would be adopted in practice or which are intended in the patent would be accompanied with a proportional modification of the action.

X Q. 435. You have previously testified that if the flushing tank were placed at a certain height above the bowl above that of the normal height the effect would be that all the water in the
378 bowl would be siphoned out before the water flowing down the pipe connecting the vacuum chamber and the bowl could reach the bowl.

Ans. That would be one extreme case and the one suggested in my previous answer would be the opposite extreme case. Between these two extremes a height could, I think, be found in which the flushing water would reach the bowl before the bowl were siphoned and the vacuum broken, and assuming that the depth of the seal of the two traps remains unaltered; but at any height the descent of the water would occasion some degree of rarefaction, and that, if the upper trap is full to the brim, will occasion a proportional degree of siphoning, although, if the tank were set very low, the siphoning might be so slight as to be imperceptible.

X Q. 436. If the pipe is long which connects the vacuum chamber to the bowl, it must be filled before the water can reach the bowl, must it not, and enough water must flow out of the vacuum chamber to fill it, provided the valve is large enough to allow a body of water of the diameter of the flushing pipe to pass through and into the flushing pipe?

Ans. Yes, sir.

X Q. 437. Then the amount of water which would have to leave the vacuum chamber before any began to enter the bowl would be much diminished by decreasing the length of the flushing pipe one-half, wouldn't it?

Ans. Certainly.

X Q. 438. Consequently the time at which water will begin to enter the bowl after the valve closing the opening into such flushing pipe is lifted from its seat will depend, other things being equal, upon the distance of the outlet of the vacuum chamber from the bowl, would it not?

Ans. The time will certainly vary, other things being equal, according as the length of the flushing pipe is varied, but probably not in direct proportion to the variation in length—that is, with a pipe of double the length I think the time would not be
379 doubled. The question is a difficult one, because the change in the length of the flushing pipe, other conditions remaining the same, involves setting the tank at a different height above the bowl, and this in turn involves a change in another condition, viz., in the length of the air pipe.

X Q. 439. The amount of rarefaction in the space between the two traps depends, other things being equal, upon the amount of water which has run out of the vacuum chamber, does it?

(Objected to as indefinite.)

Ans. No; it depends more directly upon the height of the column of water and the length of time the water continues to run. If the question refers to the effect of a partial as compared with a full emptying of the vacuum chamber, I would answer that a greater vacuum would be produced by the complete emptying than by the partial emptying.

X Q. 440. Until a certain degree of rarefaction of the air in the space between the two traps has been created the water is not siphoned out of the bowl, is it, or drawn out?

Ans. If the upper trap is full to the brim at the starting, the minutest degree of rarefaction would draw over some water.

X Q. 441. Such a minute degree of rarefaction would not be sufficient to cause such a siphonage of water in the bowl as is usual in the operation of pneumatic closets, would it?

Ans. No; the degree of rarefaction must be sufficient to support a column of water of a height equal to the depth of seal of the upper trap before such a siphonage as the question refers to will take place.

X Q. 442. Then, if the Peters & Donald closet were constructed with a pipe so short as to allow the water to reach the bowl before that degree of rarefaction took place, a certain amount of accumulation of water would take place in the bowl before it began to siphon out, wouldn't it?

Ans. It could not before it began to siphon out, but it would before it was fully siphoned out.

X Q. 443. Huber & Co. manufacture a closet which they call "Tidal Wave No. 1," do they not?

380 Ans. Yes, sir.

X Q. 444. That closet is constructed in accordance with letters patent No. 255,485, granted to James E. Boyle, is it not?

Ans. It is constructed in substantial accordance therewith.

X Q. 445. Is that an operative closet?

Ans. Yes, sir.

X Q. 446. It is considered a good closet?

Ans. I believe so.

X Q. 446½. Does it do its siphoning properly?

Ans. Yes.

X Q. 447. Does it fill the bowl properly afterwards, after the siphoning takes place?

Ans. Yes.

X Q. 448. In other words, is it a good closet as compared with what you denominate the Trombe closet?

Ans. Yes.

X Q. 449. Does it operate on the principle of the Peters & Donald closet, so far as the creation of the vacuum is concerned?

Ans. On the same principle, yes.

X Q. 450. The flow of water from the flushing tank sucks the air up through a pipe leading from the space between the two traps substantially as in the Peters & Donald closet, does it not?

(Objected to as having no bearing on the direct examination.)

Ans. Yes, sir; substantially the same.

X Q. 451. Have Huber & Co. sold these closets in competition with the others?

(Same objection.)

Ans. They have sold both kinds.

X Q. 452. Both kinds during the same period?

(Same objection.)

Ans. Yes; I think you will find them both described in their catalogue.

X Q. 453. They charge more for the closets constructed in accordance with these letters patent No. 255,485?

381 (Objected to as incompetent, irrelevant, and immaterial and as having no bearing on the direct examination.)

Ans. My only knowledge of their charges is derived from their catalogue and statements to me made in accordance therewith.

X Q. 454. What is your knowledge as so derived?

(Same objections.)

Ans. My recollection is that they charge $50 for the Tidal Wave No. 1, and $37.50 for the Cascade or Trombe.

X Q. 455. Customers are found who are willing to pay the difference, are there not?

(Same objections.)

Ans. Well, I suppose so; I really don't know that I ever saw anybody buy one.

X Q. 456. I suppose that is because it is considered in all respects; that it does its work quite as well, if not better than the other?

(Same objections.)

Ans. I know nothing of the motives which induce people to buy it.

X Q. 457. The flow of the water in the tank in which the air pipe leading from the space between the two traps opens is what does the pumping in this case, just as in the Peters & Donald patent, does it not?

(Same objections.)

Ans. That is what does the pumping in both.

X Q. 458. What is the length of that column of water from the surface of the water inside of the vacuum chamber to its outlet from the tank, which communicates freely with the open air?

(Same objections.)

Ans. That would depend on the proportions of the parts. Your question gives no dimensions.

X Q. 459. I now refer you to Complainants' Exhibit No. 6, and will ask you what the length of the column of water whose weight

would have to be taken into consideration as bearing upon the degree of vacuum created by it is in a closet constructed in accordance with Fig. 1 as shown, stating its length, not in inches, but with reference to the drawing.

382 Complainants' counsel objects as calling for an opinion upon a construction of closet, there being no evidence to show that a closet has ever been constructed exactly in accordance with the figure of the patent referred to, and for the further reason that the evidence sought has no bearing upon the direct examination, and as incompetent, irrelevant, and immaterial.

Ans. At starting—that is, upon the lifting of the valve *j*—the height of the column would be that from the highest level in the service a box or chamber F, which would be presumably the same as that of the water level shown in the tank E, or a little below it, down to the outlet from the opening lettered *i* into the service box G. As the water runs out the height of this column decreases until the water has run down to the level shown in the drawing. The construction shown in this drawing is not the same as the construction of the tanks of the Tidal Wave No. 1 closets which I have examined. In those tanks the service box G underneath is omitted and a trapped overflow is provided for conducting overflow water from the reservoir E into the flushing chamber F.

X Q. 460. You have stated that in this closet the after-wash is sufficient, so far as you know, the Tidal Wave No. 1?

(Same objection.)

Ans. Yes, sir.

X Q. 461. In such a closet as this is there any more chance of the upper trap being left unsealed after an operation in what is called the Trombe tank or a closet having the Trombe tank?

(Same objection.)

Ans. With the Tidal Wave No. 1 construction the after-wash depends upon the length to which the vent tube *g'* in the patent Exhibit No. 6 projects down into the flushing chamber F. If this proportion be correct, to give the same after-wash as the Trombe it would be as impossible to leave the upper trap un-
383 sealed with the Tidal Wave No. 1 construction as with the Trombe construction. I am assuming, of course, that the tube *g'* is large enough to let in air fast enough to give the proper after-wash.

X Q. 462. What is the object of the chamber G?

(Same objections.)

Ans. I think it was adopted chiefly as a means for providing an overflow without carrying the overflow into the vacuum chamber. It had also the effect of any service box that is vented, in that the water would run into it faster than it could run out, so that it would accumulate therein for a time and afterward run down the

Ans. Yes, sir; substantially the same.

X Q. 451. Have Huber & Co. sold these closets in competition with the others?

(Same objection.)

Ans. They have sold both kinds.

X Q. 452. Both kinds during the same period?

(Same objection.)

Ans. Yes; I think you will find them both described in their catalogue.

X Q. 453. They charge more for the closets constructed in accordance with these letters patent No. 255,485?

381 (Objected to as incompetent, irrelevant, and immaterial and as having no bearing on the direct examination.)

Ans. My only knowledge of their charges is derived from their catalogue and statements to me made in accordance therewith.

X Q. 454. What is your knowledge as so derived?

(Same objections.)

Ans. My recollection is that they charge $50 for the Tidal Wave No. 1, and $37.50 for the Cascade or Trombe.

X Q. 455. Customers are found who are willing to pay the difference, are there not?

(Same objections.)

Ans. Well, I suppose so; I really don't know that I ever saw anybody buy one.

X Q. 456. I suppose that is because it is considered in all respects; that it does its work quite as well, if not better than the other?

(Same objections.)

Ans. I know nothing of the motives which induce people to buy it.

X Q. 457. The flow of the water in the tank in which the air pipe leading from the space between the two traps opens is what does the pumping in this case, just as in the Peters & Donald patent, does it not?

(Same objections.)

Ans. That is what does the pumping in both.

X Q. 458. What is the length of that column of water from the surface of the water inside of the vacuum chamber to its outlet from the tank, which communicates freely with the open air?

(Same objections.)

Ans. That would depend on the proportions of the parts. Your question gives no dimensions.

X Q. 459. I now refer you to Complainants' Exhibit No. 6, and will ask you what the length of the column of water whose weight

would have to be taken into consideration as bearing upon the degree of vacuum created by it is in a closet constructed in accordance with Fig. 1 as shown, stating its length, not in inches, but with reference to the drawing.

382 Complainants' counsel objects as calling for an opinion upon a construction of closet, there being no evidence to show that a closet has ever been constructed exactly in accordance with the figure of the patent referred to, and for the further reason that the evidence sought has no bearing upon the direct examination, and as incompetent, irrelevant, and immaterial.

Ans. At starting—that is, upon the lifting of the valve *j*—the height of the column would be that from the highest level in the service a box or chamber F, which would be presumably the same as that of the water level shown in the tank E, or a little below it, down to the outlet from the opening lettered *i* into the service box G. As the water runs out the height of this column decreases until the water has run down to the level shown in the drawing. The construction shown in this drawing is not the same as the construction of the tanks of the Tidal Wave No. 1 closets which I have examined. In those tanks the service box G underneath is omitted and a trapped overflow is provided for conducting overflow water from the reservoir E into the flushing chamber F.

X Q. 460. You have stated that in this closet the after-wash is sufficient, so far as you know, the Tidal Wave No. 1?

(Same objection.)

Ans. Yes, sir.

X Q. 461. In such a closet as this is there any more chance of the upper trap being left unsealed after an operation in what is called the Trombe tank or a closet having the Trombe tank?

(Same objection.)

Ans. With the Tidal Wave No. 1 construction the after-wash depends upon the length to which the vent tube *g'* in the patent Exhibit No. 6 projects down into the flushing chamber F. If this proportion be correct, to give the same after-wash as the Trombe it would be as impossible to leave the upper trap un-
383 sealed with the Tidal Wave No. 1 construction as with the Trombe construction. I am assuming, of course, that the tube *g'* is large enough to let in air fast enough to give the proper after-wash.

X Q. 462. What is the object of the chamber G?

(Same objections.)

Ans. I think it was adopted chiefly as a means for providing an overflow without carrying the overflow into the vacuum chamber. It had also the effect of any service box that is vented, in that the water would run into it faster than it could run out, so that it would accumulate therein for a time and afterward run down the

flushing pipe, thereby continuing the overflow after the cessation of the flow from the vacuum chamber F.

X Q. 463. This statement in the patent, then, is correct. (Counsel reads:) "The service box G and its air pipe *m* serve much the same purpose as the air tube *g'* in retarding the flow of water at first and afterward freeing and accelerating it, and may be used in connection with the air tube as shown or as a partial substitute therefor in case of its omission." (Lines 81 to 87, page 2.) Is it correct?

Ans. That is not an absolutely correct statement. It is true that the service box G and its pipe *m* may be used as a means of affording an after-wash—that is, as a substitute for the vent pipe *g'*, so that after the water ran out from the vacuum chamber F there would be a free after-flow from the service box for refilling the bowl. The statement is incorrect in the implication that the use of the service box effects any retardation of the flow of water at first.

X Q. 464. In this construction, such as shown in the drawing, there is an overflow pipe opening into the chamber G, situated beneath the vacuum chamber, is there not?

(Same objections.)

Ans. Yes; the pipe *m*.

X Q. 465. Such a service box as is shown in this drawing, lettered G, has long been known and used for the purpose of furnishing an after-wash, has it not?

(Same objections.)

384 Ans. It had long been used for the purpose of prolonging the flush or flow of water longer than the outflow when the outlet valve from the tank was held open, but not as a means for providing an after-wash or after-flow, which should occur after the cessation of a vacuum.

X Q. 466. A similar device is shown in the English patent granted Messrs. Peters & Donald, though not exactly the same, is there not?

(Same objections.)

Ans. I don't recall any such construction in that patent; not having it before me, I cannot say.

X Q. 467. Such a pocket containing water to refill the bowl, as is shown in the Boyle patent No. 255,485, could be placed beneath the vacuum chamber shown in the Peters & Donald patent, could it not?

(Same objections.)

Ans. I should think it might.

X Q. 468. It would operate there substantially as it does in this case, would it not?

(Same objections.)

Ans. If applied in the same way it would in so far as its own operation is concerned. It would not modify the operations taking place within the vacuum chamber, of course.

X Q. 469. The overflow pipe could be arranged to open into the chamber G in that case substantially as it does in the Boyle patent No. 255,485, could it not?

(Same objections.)

Ans. Yes; it could be so constructed. In that case the construction would be the same substantially as that which is described or defined in claim 6 of this patent No. 255,485.

X Q. 470. I hand you a drawing representing a tank like that of Peters & Donald, in which E represents the reservoir tank, F represents the vacuum chamber, and G represents a chamber answering to the one lettered G in the drawing of the patent No. 255,485, and the pipe H being intended to answer to the pipe *m* in the drawing last mentioned. Such a construction as that might be adopted, might it not, in connection with the Peters & Donald con-
385 struction (hands drawing to witness)?

(Same objections.)

Ans. Yes; it might; that is in all substantial respects the same construction that is claimed as an improvement in the sixth claim of the patent No. 255,485.

Defendant's counsel objects to the last portion of the answer relating to what is claimed in the patent referred to as being an opinion on a question of law and being matter not called for and not responsive to the question asked.

Complainants' counsel calls attention to the fact that the witness is now being examined on matters not referred to in the direct examination, the witness being examined by counsel for defendant as if called as their own witness in the case, and counsel for complainants states that if this line of cross-examination is continued that he will assert the right to cross-examine the witness on these matters the same as if the witness had been called by defendants as their own witness.

Counsel for defendants here introduces the said drawing in evidence, which is marked "Defendant's Exhibit 28."

Counsel for complainants objects to the introduction of the said exhibit as having no bearing on the direct examination and as referring to a purely hypothetical construction.

X Q. 471. When was the Peters & Donald closet tested, or rather Defendant's Exhibit 14? Did you personally apply any particular test to see whether the air connections were air-tight; those connections between the air pipe leading to the vacuum chamber and the connection between that pipe and the space between the two traps?

Ans. No; none further than to see the workman screwing them up tightly.

X Q. 472. Whose workmen were they who screwed them up?

386 Ans. All the connections were made by one of the workmen employed at Huber & Co.'s factory; I did not learn his

name. All the connections were made in exactly the same way, so far as I could see.

X Q. 473. You have tested the closet having the Trombe tank to see whether or not the water in the upper trap would siphon out in case a bucket of water was poured into it, have you not, and discovered that it would not be?

Ans. Yes, sir.

X Q. 474. You tested that in that way?

Ans. Yes; I tested it myself.

X Q. 475. You did not apply any such tests to ascertain whether or not the other tank, Defendant's Exhibit 14, would operate as well or not; whether the other trap would be siphoned out and left partially unsealed in case you did that in this case any more than the upper trap was siphoned out in the other case, did you?

Ans. No; I made no such tests with the Exhibit 14 tank. The reason is that the point did not occur to me at the time I was testing it.

X Q. 476. You have preferred to rely upon theory in that matter and have relied upon it?

Ans. No; I should prefer to make the test, but, as the question was only suggested to me to-day by Mr. Browne, I have not had an opportunity to do so.

X Q. 477. If the pull of the Peters & Donald closet is held down indefinitely, the degree of water which will be consumed cannot exceed the capacity of the flushing chamber, can it, or the vacuum chamber, in other words?

Ans. It cannot unless the piston valve leaks.

X Q. 478. If you have ever seen the No. 1 Tidal Wave closet, such as is manufactured by Huber & Co., give the dimensions of the tank corresponding to the tank shown in Fig. 1 of patent No. 255,485, as nearly as you can.

(Objected to as having no bearing on the direct examination.)

387 Ans. To the best of my recollection I should judge the tank to be of very nearly, if not quite, the same size and proportions as these tanks Exhibit Collapsed Tank and Complainants' Exhibit 19.

X Q. 479. Is it not a fact that these boxes, Exhibits Nos. 24 and 19, were made originally for Tidal Wave closet No. 1?

(Same objection.)

Ans. I know nothing about them except from having heard the workmen at the factory talk about using the same tank, I think.

X Q. 480. Then, as I understand your answer to a question previously put, the length of the column of water creating the vacuum in one of these closets could not at the most possibly exceed the depth of one of these boxes, unless you are mistaken as to the proportions?

(Same objection.)

X Q. 481. I have not testified at all as to the height of the column

of water in the Tidal Wave No. 1 tank as it is made, but only as to the construction shown in the patent. Assuming that the Tidal Wave No. 1 tank has the same proportions as these tanks, Exhibit Collapsed Tank and Complainants' Exhibit 19, it would be impossible for me, even with that data, to state the height of the column of water that would be effective in creating the vacuum, because there is another element to be considered, viz., the depth of seal by which the overflow pipe is trapped—a depth which I do not know. The deeper this seal the longer the column of water that will be effective in producing a vacuum up to the limit of rarefaction for which the tank is constructed according to the particular proportion of the vent pipe projecting down into the vacuum chamber.

X Q. 482. Of what material is the vacuum chamber in the Tidal Wave No. 1 closet constructed?

(Same objection.)

Ans. In all the tanks that I have seen it is constructed of tinned copper, I believe—that is, a wooden box lined with copper.

X Q. 483. Did you ever hear of one collapsing?

388 (Same objection.)

Ans. No further than that I have been told that Huber & Co. had difficulty with them on that account at first, and were compelled to fasten the copper to the wood at intervals in the vacuum chamber by driving in tacks and soldering over their heads.

X Q. 484. The same thing could be done in the Peters & Donald tank, such as shown in the Peters & Donald patent, couldn't it?

Ans. Yes, sir.

X Q. 485. That would prevent collapsing in that case just as it does in the other, wouldn't it?

Ans. If a sufficient number of tacks were driven in to resist the collapsing tendency of the vacuum it would.

X Q. 486. In the use of the Trombe tank if a person pulled the pull and kept it pulled down long enough all the water in the reservoir tank would be exhausted and fall down into the bowl, would it not?

Ans. Certainly; the tank would be emptied.

X Q. 487. If a pocket were placed below the tank shown in the Peters & Donald patent to contain water for an after-wash, the water which entered that pocket would flow down and refill the bowl after the valve was allowed to seat, regardless of whether the water was shut off one-half?

Ans. Yes; certainly.

Redirect examination of Mr. A. C. FRASER by Mr. BROWNE:

R. Q. 488. In the experimental tests made by you or in your presence at the factory of Henry Huber & Co., on September 6th, 1888, with Complainants' Exhibit Trombe Tank, Complainants' Exhibit No. 19, Complainants' Exhibit No. 20, and Defendant's Exhibit No. 14, please state whether or not the same quality and size

of paper was used by you or in your presence in making tests of these several tanks.

(Objected to by counsel for defendant as leading, irrelevant, and incompetent and not proper cross-examination.)

389 Ans. I don't remember about testing Exhibit No. 20, single-charge Trombe tank, with a wad of paper, but the other three tanks I tested in that way, taking in each case a half sheet of manilla paper from a pile, the sheets being to all appearance of the same quality and weight and being of the same size, and I crumpled up the sheet in each case into a wad or ball of about four inches in diameter as nearly as I can judge. I was careful to make the wad or ball of the same size or compactness in each instance.

Counsel for complainants, without waiving or withdrawing any of the objections made during the cross-examination of Mr. Fraser on matters concerning which he was questioned, which had no bearing upon direct examination, and upon which he was questioned as if he had been defendant's own witness, asks the following questions *de bene esse:*

R. Q. 489. Please state whether or not Henry Huber & Co. use the same water-closet bowl with Tidal Wave No. 1 tank that they do with the Trombe tank, if you know.

(Objected to as irrelevant and immaterial.)

Ans. So far as my knowledge extends they use the Tidal Wave No. 1 tank or vacuum-chamber tank only with closets having both traps above the floor, and in which consequently the two traps are brought closer together than if one trap were placed beneath the floor, so that the confined air space between the traps is of smaller capacity.

R. Q. 490. You have testified in your cross-examination that to the best of your knowledge and belief the closet designated by Henry Huber & Co. as the Tidal Wave No. 1 sells at fifty dollars, and that the closet made by them, which is designated as the Trombe closet, is sold for $37.50. Please state whether or not, if you know, the same water-closet bowl is used with both of these two styles of closets.

390 Objected to by counsel for defendant as irrelevant, incompetent, and immaterial, and assuming that the witness does know the bowl sold with these closets respectively, he already having said that all he knows about the selling price was what he saw advertised in the catalogue.

Ans. The closet which I refer to as being valued in the catalogue at $50 is the Tidal Wave No. 1, the lower part of which comprises two traps and the bowl all molded in one piece of earthenware, the two traps, of course, coming above the floor. The closet which I refer to as being valued at $37.50 is the Cascade bowl and the Trombe tank, the bowl having only one trap and being designed

to be set in connection with a plumber's lead trap beneath the floor.

R. Q. 491. Please state, if you know, which is the more expensive, a Tidal Wave No. 1 bowl or a Cascade bowl.

Objected to by counsel for defendant as incompetent, it not appearing that the witness has had any experience in dealing with bowls or that he knows anything about the cost more than any person or non-expert would know.

Ans. As to their actual cost, my only knowledge is derived from what I have been told by potters and others. From a comparison of the two earthenware structures, I judge that the Tidal Wave No. 1, being the more complicated structure, is the more expensive.

Recross-examination by Mr. REX:

R. X Q. 492. Where the lower trap is above the floor and forms a part of the bowl it dispenses with the necessity of a trap below the floor, separate from the bowl, does it?

Ans. Yes; it does.

ARTHUR C. FRASER.

Sworn to and subscribed before me this 4th day of October, 1888.

JNO. E. GAVIN,
Notary Public, N. Y. C.

Complainants' rebutting testimony closed.

391 CITY, COUNTY, AND STATE OF NEW YORK, *ss:*

I, John E. Gavin, a notary public for the county of New York, State of New York, do hereby certify that the within-named Samuel Clark, Thomas J. Tuomey, Henry Morton, John A. C. Teppe, Adolph C. Tiedemann, Edward Murphy, and Arthur C. Fraser, witnesses called in the within case on the part of the complainant at the times stated in the record, were by me first sworn to testify the truth, the whole truth, and nothing but the truth, and that the depositions by them subscribed, as herein set forth, were reduced to writing by myself in the presence of the witnesses, and that the stipulations herein contained were entered into by the counsel herein for the respective parties in my hearing and reduced to writing by me in their presence and at their request; that I am not counsel, attorney, or relative of either party or otherwise interested in the event of this suit.

In testimony whereof I have hereunto set my hand and official seal this 11th day of October, 1888.

[SEAL.] JNO. E. GAVIN,
Notary Public, New York County, New York.

of paper was used by you or in your presence in making tests of these several tanks.

(Objected to by counsel for defendant as leading, irrelevant, and incompetent and not proper cross-examination.)

389 Ans. I don't remember about testing Exhibit No. 20, single-charge Trombe tank, with a wad of paper, but the other three tanks I tested in that way, taking in each case a half sheet of manilla paper from a pile, the sheets being to all appearance of the same quality and weight and being of the same size, and I crumpled up the sheet in each case into a wad or ball of about four inches in diameter as nearly as I can judge. I was careful to make the wad or ball of the same size or compactness in each instance.

Counsel for complainants, without waiving or withdrawing any of the objections made during the cross-examination of Mr. Fraser on matters concerning which he was questioned, which had no bearing upon direct examination, and upon which he was questioned as if he had been defendant's own witness, asks the following questions *de bene esse:*

R. Q. 489. Please state whether or not Henry Huber & Co. use the same water-closet bowl with Tidal Wave No. 1 tank that they do with the Trombe tank, if you know.

(Objected to as irrelevant and immaterial.)

Ans. So far as my knowledge extends they use the Tidal Wave No. 1 tank or vacuum-chamber tank only with closets having both traps above the floor, and in which consequently the two traps are brought closer together than if one trap were placed beneath the floor, so that the confined air space between the traps is of smaller capacity.

R. Q. 490. You have testified in your cross-examination that to the best of your knowledge and belief the closet designated by Henry Huber & Co. as the Tidal Wave No. 1 sells at fifty dollars, and that the closet made by them, which is designated as the Trombe closet, is sold for $37.50. Please state whether or not, if you know, the same water-closet bowl is used with both of these two styles of closets.

Objected to by counsel for defendant as irrelevant, incompetent, and immaterial, and assuming that the witness does know
390 the bowl sold with these closets respectively, he already having said that all he knows about the selling price was what he saw advertised in the catalogue.

Ans. The closet which I refer to as being valued in the catalogue at $50 is the Tidal Wave No. 1, the lower part of which comprises two traps and the bowl all molded in one piece of earthenware, the two traps, of course, coming above the floor. The closet which I refer to as being valued at $37.50 is the Cascade bowl and the Trombe tank, the bowl having only one trap and being designed

to be set in connection with a plumber's lead trap beneath the floor.

R. Q. 491. Please state, if you know, which is the more expensive, a Tidal Wave No. 1 bowl or a Cascade bowl.

Objected to by counsel for defendant as incompetent, it not appearing that the witness has had any experience in dealing with bowls or that he knows anything about the cost more than any person or non-expert would know.

Ans. As to their actual cost, my only knowledge is derived from what I have been told by potters and others. From a comparison of the two earthenware structures, I judge that the Tidal Wave No. 1, being the more complicated structure, is the more expensive.

Recross-examination by Mr. REX:

R. X Q. 492. Where the lower trap is above the floor and forms a part of the bowl it dispenses with the necessity of a trap below the floor, separate from the bowl, does it?

Ans. Yes; it does.

ARTHUR C. FRASER.

Sworn to and subscribed before me this 4th day of October, 1888.

JNO. E. GAVIN,
Notary Public, N. Y. C.

Complainants' rebutting testimony closed.

391 CITY, COUNTY, AND STATE OF NEW YORK, *ss:*

I, John E. Gavin, a notary public for the county of New York, State of New York, do hereby certify that the within-named Samuel Clark, Thomas J. Tuomey, Henry Morton, John A. C. Teppe, Adolph C. Tiedemann, Edward Murphy, and Arthur C. Fraser, witnesses called in the within case on the part of the complainant at the times stated in the record, were by me first sworn to testify the truth, the whole truth, and nothing but the truth, and that the depositions by them subscribed, as herein set forth, were reduced to writing by myself in the presence of the witnesses, and that the stipulations herein contained were entered into by the counsel herein for the respective parties in my hearing and reduced to writing by me in their presence and at their request; that I am not counsel, attorney, or relative of either party or otherwise interested in the event of this suit.

In testimony whereof I have hereunto set my hand and official seal this 11th day of October, 1888.

[SEAL.] JNO. E. GAVIN,
Notary Public, New York County, New York.

392 COMPLAINANTS' EXHIBIT A X.

Duly certified copy of file-wrapper of reissue letters patent granted James E. Boyle April 19, 1887, No. 10826, as follows:

188–.

Reissue.

No. 10826,
James E. Boyle,
Of Brooklyn,
County of Kings,
State of New York.
Invention: Flushing apparatus for Water-closets.

Parts of application filed.
- Petition, December 29, 1884.
- Affidavit, " " "
- Specification, " " "
- Drawing, two sheets, " " "
- Old patent, Jan. 2, 1885.
- Abstract of title, Jan. 2, 1885.
- Cert. deposit, —.
- Cash " 30, December 29, 1884.

App. filed complete Jan. 2, '85.
No. and date of original patent, 291,139, January 1st, 1884.
Examined M'ch 30, 1887, ex'rs-in-chief,
per F. T. Brown.
Countersigned, T. W. Dick Bullock,
Ap'l 1, '87. For Commissioner.
Notice of allowance April 1st, 1887.
Reissued Apr. 19th, 1887.

1884.

Contents, Division 9.

Application papers.
1. Letter, Jan. 27, 1885.
2. Argument, Mar. 16, 1885.
393 3. Amend't, Mar. 31, 1885.
4. Rejected Ap'l 17, 1885.
5. Argument, May 6, 1885.
6. Letter, May 14, 1885.
7. Amend't, May 21, 1885.
8. Letter, June 1, 1885.
9. Appealed to board June 8, 1885.
10. Letter, June 26, 1885.
11. Argument, July 3d, 1885.
12. Letter, July 10, 1885.
13. Interlocutory appeal, July 16, '85.

14. Notice of hearing, July 16, '85.
15. Order of Comm'r, Aug. 6, '85.
16. Comm'r's decision, " 19, '85.
17. Notice of " " " "
18. Letter, Aug. 24, 1885.
19. Amend't A, Aug. 29, 1885.
20. Letter, Sept. 11, 1885.
21. Argument, Sept. 28, 1885.
22. Letter, Oct. 5, 1885.
23. Amend't, Oct. 13, '85.
24. Int'l'y appeal, Oct. 13th, '85.
25. Notice of hearing, Oct. 13th, '85.
Nov. 13, '85.
26. Ex'r aff'd.
27. Letter, Nov. 23, '85.
28. Letter, Dec. 17, 1885.

Title: Improvement in flushing apparatus for water-closets.
Appealed to board Dec. 28, 1885.
Ex'r's statement, Jan. 13, 1886.
" dec's rev's'd Ap'l 22, '86.
(App'l file 9430 B.)
32. Letter, May 6, '86.
33. Intf. notice, May 21st, '86.
34. Power of attorney.
35. Intf. letter, July 10th, '86.
36. Decis'n favorable to Boyle, M'ch 7, '86.

394 COMPLAINANTS' EXHIBIT B X.

Duly certified copy of the affidavit of James E. Boyle, filed December 29th, 1884, including a tracing of the drawing referred to therein, in the matter of the application of James E. Boyle for reissue of patent No. 291,139.

Statement.

STATE OF NEW YORK,
City and County of New York, } *ss:*

James E. Boyle, being duly sworn, deposes and says that he is the patentee of letters patent No. 291,139, granted January first, 1884, for improvements in flushing apparatus for water-closets, which patent he now seeks to reissue.

That he believes his said patent to be inoperative to fully protect the invention intended to be covered by it, for the following reason, namely, that the principal claims in said patent are defective or insufficient in that they are, or appear to be, limited to combinations embodying the "flushing chamber F" as an essential element, whereas that chamber is not essential to his invention in its generic features.

That he believes the specification of his said patent to be defect-

ive in the following respects, namely: (1) in the use of the words "in great part" (line 92, page 1) as being calculated to mislead, and (2) in that the description of the modification, Fig. 6, is not sufficiently full.

That deponent believes that, as stated in the specification of his said patent, his invention introduced "a new principle for operating double-trapped or siphon water-closets; namely, that of producing the requisite vacuum by causing the falling flushing water to act as an injector and draw air along with it," and that through inadvertence or mistake of judgment his claims were drawn with less breadth than his specification and do not, as they should, cover broadly the application of such principle.

395 That such inadvertence or mistake arose by and in consequence of a misunderstanding between deponent and his attorney, Mr. Arthur C. Fraser, of the firm of Burke, Fraser & Connett, who prepared the application for said patent, as will more fully appear from the accompanying affidavit of said Fraser, and also by reason of deponent's want of familiarity with the technical meaning of the language used in patent claims, and that the same arose without any fraudulent or deceptive intention.

That in deponent's early experiments with this invention he devised and tested various forms and modifications of mechanism, and among others the three constructions shown by the sketches hereunto annexed, of which sketches the following is a correct description:

In each sketch A is a water tank or service box; B is the outlet valve thereof; C is the flushing pipe extending down to the closet bowl; D is the injector therein; E is the suction or air pipe extending to the air space between the two traps below, and F is the lever for working the valve. In Fig. 1 the air pipe E joins the flushing pipe C by an elbow, their point of junction constituting the injector. In Fig. 2 there is the same construction, except that the end of pipe E enters pipe C and turns down therein, forming a more perfect injector. In Fig. 3 the air pipe E extends over the top of the tank and is connected by a rubber tube, *e*, with the tubular valve stem *b* of the valve B, the bottom end of this stem extending below the valve and into the pipe C far enough to constitute an injector.

That these constructions were all made and operated by deponent before January 1st, 1882, and they all worked satisfactorily in siphoning the closet, but embodied no means for giving an "after-wash" for filling the bowl after the flushing, and that in supplying such means he modified the construction and adopted those constructions shown in Figs. 1, 4, and 5 of his said patent.

396 That in describing his invention to his said attorney he did not describe the first constructions devised by him and shown in the said sketches, but only the preferred constructions.

That on or about the twenty-eighth day of November, 1884, deponent observed in the Patent Office Gazette the report of a patent No. 308,358, granted Nov. 25, 1884, to Frank B. Hanson, showing deponent's said invention in a form almost identical with one of the said constructions originally invented by deponent, and that he

thereupon consulted with his attorney to ascertain how such a patent came to be issued to said Hanson.

That his said attorney proceeded to investigate the matter, and in the course of a few days advised this deponent of the defect or insufficiency in his said patent, and that prior to being so advised this deponent had no thought or suspicion that his said patent was in anywise defective or insufficient.

That thereupon deponent instructed his said attorney to prepare an application for reissue of his said patent.

And deponent, believing that the claims in the said patent No. 308,358 interfere with the claims to which he is entitled, and believing further that he and not the said Hanson is the original and first inventor of the subject-matter thereof, demands of the Commissioner of Patents the declaration of an interference with the said patent.

And deponent further avers that so far as he is aware no interests have arisen adverse to the grant of the reissue which he now applies for, either in favor of the said Hanson or of any other person or persons, and that so far as he is aware his said patent has not yet been infringed, nor has any attempt been made to imitate or evade the same, except by the said Hanson.

JAMES E. BOYLE.

Sworn to and subscribed before me this 27th day of December, 1884.

CHARLES F. HOLM,
Notary Public, Kings Co.

[L. S.]

Cert. filed N. Y. Co.

397 COMPLAINANTS' EXHIBIT C X.

Duly certified copy of the affidavit of Arthur C. Fraser, filed in the matter of the application of James E. Boyle for reissue of patent No. 291,139.

Affidavit.

STATE OF NEW YORK,
City and County of New York, } ss:

Arthur C. Fraser, being duly sworn, deposes and says that he is a member of the firm of Burke, Fraser & Connett, the attorneys of record through whose agency the patent of James E. Boyle, No. 291,139, dated January 1, 1884, was procured.

That he prepared the application for said patent and consulted with said Boyle in relation thereto.

That previously thereto he had prepared the application for the patent of said Boyle, No. 225,485, dated March 28, 1882, which patent covers a similar construction of siphon closet and embodies a flushing chamber as an essential element of the apparatus for siphoning the closet.

That when the said Boyle described to deponent his invention now embodied in his said patent No. 291,139 of January 1, 1884, he treated it as an improvement upon his previous invention covered by his patent of March 28, 1882, and minutely described the functions and operation of the several parts, notably of the flushing chamber, and of the means for securing an "after-wash" for filling the bowl.

That deponent clearly understood that the invention in question introduced a new principle in water-closet flushing apparatus, that of exhausting the air by means of an injector, and so described the invention in the specification, but that in drawing the claims he inadvertently incorporated the flushing chamber as an element therein, being at the time under the impression that the said flushing chamber was essential to the operation of the invention, whereas, in fact, the said chamber is essential only to the operativeness of the devices for producing the "after-wash" for refilling the
398 bowl, which devices are claimed specifically in claim 4 of said patent.

That deponent was not then aware that the said Boyle had ever used the said flushing apparatus with a single tank from which the flushing pipe leads directly, thereby omitting the flushing chamber beneath the tank, nor did it occur to him at that time that the invention was susceptible of being so modified.

That deponent drew the first three claims in said patent in their present form through a misapprehension of the essentials of the said invention, which misapprehension arose from a misunderstanding between himself and the said Boyle, and without any fraudulent or deceptive intention on the part of this deponent, nor, as he believes, of the said Boyle.

That deponent was not aware of the defect or insufficiency in the said patent until after he first saw the patent of Frank B. Hanson, No. 308,358, and that after examining this patent and ascertaining the circumstances of its grant he advised the said Boyle that said Hanson had secured a patent covering the said Boyle's prior invention, and counseled said Boyle to apply for a reissue of his said patent and demand an interference with said patent of Hanson.

That no rights adverse to the said Boyle and in favor of the said Hanson can possibly yet have accrued, for the reason that any water-closet made under the said patent of Hanson is necessarily an infringement upon the prior patent of Peters & Donald, No. 260,232, granted June 27, 1882, which patent will not expire until April 7, 1888, and which is owned by Henry Huber, the sole licensee under said patent of Boyle.

ARTHUR C. FRASER.

Sworn to and subscribed before me this twenty-seventh day of December, 1884.

GEO. F. BARLOW,
Notary Public, Kings Co.

[L. S.]

Certf. filed in N. Y. Co.

399 COMPLAINANTS' EXHIBIT D x.

Duly Certified Copy of Examiner's Letter, Dated January 27th, 1885, Rejecting Application of James E. Boyle for Reissue of Patent No. 291,139.

Dictated.
Copied.

DEPARTMENT OF THE INTERIOR,
UNITED STATES PATENT OFFICE,
January 27th, 1885.

James E. Boyle, care Burke, Fraser & Connett, present.

Reissue application No. 151,880; filed January 2d, 1885.

This application has been examined, and it is found that it does not present a proper case for reissue.

The alleged defect or insufficiency in the specification appears to be simply the failure of applicant to present his invention in his original application as broadly as he might have done, and the correction which he now seeks to make involves a departure from the invention disclosed in his patent, inasmuch as it extends in scope said patented invention more than is justified by the subject-matter as disclosed in that patent.

Moreover, an additional objection to the grant of this reissue is that applicant has been guilty of laches in filing the same. If his original patent did not cover his invention as broadly as it should have done, such fact was apparent upon the face of the patent, and applicant was bound to take notice of it upon opening the patent, and was furthermore bound to use diligence in applying for the correction of the error, but this he did not do, as a year passed between the issuance of the original patent and the application for reissue; meanwhile rights have become vested in others, which it is the purpose of this reissue to take away or cast a doubt upon.

400 Attention is directed to the decisions in Miller & Co. *vs.* Bridgeport Brass Co., 21 O. G., 201; James *vs.* Campbell, 21 O. G., 337, and Hartshorn *vs.* Eagle Shade Roller Co., 25 O. G., 1191, which govern the practice of the office and preclude the granting of this reissue.

The application must be rejected.

FRANK T. BROWN,
Examiner, Div. 9.

COMPLAINANTS' EXHIBIT E x.

Duly certified copy of argument of attorneys, filed March 16, 1885, in response to examiner's letter of January 27th, 1885 (Exhibit D *x*), in the matter of the application of James E. Boyle for reissue of letters patent No. 291,139.

COMPLAINANTS' EXHIBIT F x.

Duly certified copy of examiner's letter of rejection, dated April 17th, 1885 (following argument, Exhibit E *x*), in the matter of the application of James E. Boyle for reissue of letters patent No. 291,139, as follows:

Room 120.

DEPARTMENT OF THE INTERIOR,
UNITED STATES PATENT OFFICE,
M. S. B. WASHINGTON, D. C., *April 17th*, 1885.

James E. Boyle, care Burke, Fraser and Connett, present.

Flushing apparatus.

No. 151,880. Filed Jan. 2, 1885.

Claims 2 and 4 are too indefinite in view of Commissioner's
401 decisions in *Ex parte* Deming, vol. 26, O. G., p. 1207, and *Ex parte* Wilkin, vol. 29, O. G., p. 950, and, as presented, they are refused.

Claims 3 and 6 are incomplete without the bell "*n*." Claim 7 is refused on patents to Waefelaer, No. 286,874, Oct. 16, 1883, and Smith, No. 301,932, July 15, 1884, "water-closets plunger."

Since the last official action the decisions of the Supreme Court which have been rendered are more liberal in regard to reissues than those which preceded, especially in respect to the lapse of time, and this case appears to be free from objection in that behalf.

The objections raised in a former letter are therefore withdrawn.

FRANK T. BROWN, *Examiner*.

COMPLAINANTS' EXHIBIT G x.

Duly certified copy of file-wrapper and contents of appeal to board of examiners-in-chief in the matter of the application of James E. Boyle for reissue of letters pattent No. 291,139.

File-Wrapper.

The file-wrapper reads as follows:

Serial No. 151,883. U. S. Patent Office, Jan. 15, 1886. Board of appeals.

1885.

Appeal to the examiners-in-chief.

No. 9430*b*.

James E. Boyle,
Of ——,
402 County of ——,
State of ——.

Flushing apparatus for water-closets.
Rec'd Dec. 28, '85.
Petition, Dec. 28, '85.
Cert. dep. —.
Cash, $10, Dec. 28, '85.
Burke, Fraser & Connett, present.

1885.

Contents.

Application papers.
1. Reasons of appeal, filed Dec. 28. '85.
2. Examiner's statement, Jan. 13, '86.
3. Hearing, Thursday, Feb. 25, '86.
4. Held up for brief, Feb. 25, '86.
5. Brief; argument filed April 7, '86.
6. Decision of the examiner, ——.
7. Reversed, April 22, '86.
8. Notice of decision sent, April 22, '86.
9.
10.

Title: Improvement in —.
Comp':
A. C. Wickwar, J. B. Banks.

The file contents are in part as follows (immaterial portions being here omitted), viz:

403 *Appeal from Primary Examiner to Board of Examiners-in-Chief.*

In the United States Patent Office.

Applicant, James E. Boyle.
Invention, flushing apparatus for water-closets.
Examiner's room, No. 120.
Application No. 151,880.
Filed Jan. 2, 1885.

Appeal to Board of Examiners-in-Chief.

Hon. Commissioner of Patents.

SIR: In the matter of the above-entitled application we hereby appeal to the examiners-in-chief from the decision of the principal examiner, rendered December 17, 1885, rejecting claims 1, 2, 3, 4, and 6 a second time. The following are submitted as reasons of appeal:

1. The examiner erred in holding and deciding that claims 1, 2, 3, and 4 are substantially met by the patent of Peters & Donald, No. 260,232. The patent of Peters & Donald fails to show any suction injector, which is the distinguishing feature of novelty of these claims.

2. The examiner erred in holding and deciding that claim 6 is "incomplete" and in rejecting it on that ground. Claim 6 covers a distinct feature of the invention from the other claims and the

combination expressed in it is operative. To introduce in it the additional elements demanded by the examiner would emasculate it and deprive applicant of that protection under his reissued patent which he has already enjoyed for nearly two years under his original patent.

Respectfully, BURKE, FRASER & CONNETT,
Attorneys for James E. Boyle.

New York, December 26, 1885.

(Examiner's answer to appeal and attorney's brief are here omitted.)

404 *Decision of Examiners-in-Chief.*

No. 9430.

U. S. PATENT OFFICE, *April* 22, 1886.

Before the examiners-in-chief on appeal.

Application of James E. Boyle for a reissue of patent No. 291,139, granted January 1, 1884. Reissue application filed January 2, 1885. Serial No., 151,880.

Improvement in Flushing Apparatus for Water-Closets.

The claims appealed are:

"1. A water-closet consisting of a bowl with the soil passage leading therefrom and two successive traps in said passage, in combination with a flushing pipe for conveying water to the bowl; a suction injector arranged in connection with said pipe and to be traversed by the flushing water, and an air pipe leading from the air space between said traps and communicating with said injector substantially as set forth, whereby the flow of water through said injector serves to draw air from said air space.

"2. A flushing apparatus for water-closets, consisting of the combination of a reservoir tank, a flushing valve controlling the outlet thereof, a flushing pipe for conveying water therefrom to the bowl of the closet, a suction injector arranged in connection with said pipe and to be traversed by the descending flushing water, and a suction pipe in connection with said injector, whereby the water in flowing from said tank downward through the flushing pipe traverses said injector and sucks the air from said suction pipe.

"3. The combination of a reservoir tank, a flushing chamber, a valve controlling the admission of water from said tank to said chamber, a suction pipe communicating with the interior of said chamber, an injector beneath the outlet from said chamber,
405 a flushing pipe leading downward from said injector and a suction passage affording communication from said injector to said suction pipe, substantially as and for the purposes set forth.

"4. A flushing apparatus for water-closets, consisting of a reservoir tank, a flushing valve controlling the outlet thereof, a flushing

pipe for conveying water therefrom to the bowl of the closet, a suction injector arranged in connection with said pipe and to be traversed by the descending flushing water, and a suction pipe in connection with said injector, whereby the passage of water through said injector will suck the air from said suction pipe, all combined together, and with a trapped air passage communicating with the said suction pipe and arranged to be unsealed, and thereby to admit air to the suction pipe and break the vacuum therein before the cessation of the flow of flushing water, substantially as set forth.

"6. A flushing apparatus for a water-closet, consisting of the combination of a reservoir tank, a flushing chamber provided with an inlet orifice of large area communicating with said tank and with an outlet orifice of contracted area, proportioned to the area of said inlet orifice, substantially as specified; a valve adapted to close said inlet orifice, an air pipe opening into said flushing chamber, and a flushing pipe leading from said outlet orifice, all arranged and adapted to operate substantially as set forth."

Claims 1, 2, 3, and 4 stand rejected upon the patent to Peters & Donald, No. 260,232, claim 6, as for a deficient combination. The claims rejected for lack of novelty will be first considered.

Claim 1. The patent to Peters & Donald discloses all the elements of this claim except the "suction injector arranged in connection with said pipe" (the flushing pipe), "and to be traversed by the flushing water." In lieu of this element and device Peters & Donald carry their air pipe directly from the air space between the traps to the top of the flushing chamber, thus transferring the air from one space to the other by displacement. Boyle regards his plan as vastly superior to the former method, and it is one of the
406 prime features of his invention. Whether superior or not, it certainly differs from that of the Peters & Donald patent, both in principle of operation and in substantial mechanism, and the said novelty joined with the obvious utility or operativeness entitle applicant to a patent on the combination set forth.

Claims 2, 3, and 4 contain the same feature of departure from the reference cited, namely, the suction injector arranged in connection with the flushing pipe, and are admissible for the same reasons.

Claim 6:

(This portion of the decision is here omitted, since claim 6 is not involved in the present litigation.)

We therefore reverse the examiner's decision as to all the claims in controversy.

H. H. BATES,
R. L. B. CLARKE,
ROBERT J. FISHER, JR.,
Examiners-in-Chief.

COMPLAINANTS' EXHIBIT H X.

Duly certified copy of examiner's letter, dated May 21st, 1886, declaring interference of "Hanson *vs.* Boyle" between the application of James E. Boyle for the reissue of letters patent No. 291,139 and

letters patent granted to Frank B. Hanson November 25th, 1884, No. 308,358, as follows:

U. S. Patent Office, May 23, 1886, ex'r of interference.

DEPARTMENT OF THE INTERIOR,
UNITED STATES PATENT OFFICE,
WASHINGTON, D. C., *May 21st*, 1886.

James E. Boyle, care Burke, Fraser & Connett, present:

407 Please find below a copy of a communication from the examiner concerning your application for reissue patent for improvement in flushing apparatus, etc., filed Jan. 2d, 1885, No. 151,880.

Very respectfully, M. V. MONTGOMERY,
Commissioner of Patents.

Room No. 120.

All communications should be addressed to "The Commissioner of Patents, Washington, D. C."

Your case, above referred to, is adjudged to interfere with others hereafter specified, and the question of priority will be determined in conformity with the rules.

The statement demanded by rule 105 must be sealed up and filed on or before the — day of ——, 188–, with the subject of the invention and name of party filing it indorsed on the envelope. The subject-matter involved in the interference is:

A water-closet consisting of a bowl with a soil passage leading therefrom having two successive traps, in combination with a flushing pipe for conveying water to the bowl, a suction injector in connection with said pipe and to be traversed by the flushing water, and an air pipe leading from the air space between said traps and communicating with said injector, as substantially embraced in your first and second claims and in Hanson's first and second claim.

The interfering party is Frank B. Hanson, of New York, N. Y., whose patent was issued Nov. 25, 1884, No. 308,358, upon an application filed June 12, 1883. His attorney is Mr. Edwin H. Brown, 32 Park place, New York city.

FRANK T. BROWN, *Examiner.*

COMPLAINANTS' EXHIBIT I X.

Duly certified copy of the decision of the examiner of inter-
408 ferences, dated March 7, 1887, granting priority in favor of Boyle in the matter of the interference "Hanson *vs.* Boyle."

The decision concludes thus:

"The evidence is clear that Boyle reduced his conception to practice prior to the date at which Hanson fixes the time at which he did the same with his, and judgment of priority of invention as to

the subject-matter of the interference is therefore awarded him. Limit of appeal from this decision will expire March 28, 1887.

" WALTER JOHNSON,
" *Examiner of Interferences.*

" W. W. ORRICK,
"*Assistant Examiner.*

" March 7, 1887."

COMPLAINANTS' EXHIBIT No. 21.

Cost List of Trombe Tank.

24-inch copper Trombe tank, size 24 x 12 x 16¾; size of service box, 5 x 6¼ x 22¼.

10 ft. white wood		$ 3¾	$ 37.50
2 ft. pine		24 00	04.80
7⅜ lbs. copper		31c.	2 28.62
1½ lbs. solder		12c.	18.00
26 tinned tacks			02.00
⅜ lb cast-iron casting		3½c.	01.31
15/16 lb cast-iron casting		2½c.	03.28
1 S hook			00.50
1 5-lb copper ball			18.75
Board			02.00
4 No. 10 2 W. screws, .319 4 No. 12 1 " .239 2¾ No. 12 " .105	663 70/10		01.79
Leather washers			15.00
Riveting and ball-cock wire, 3 ounces, 24c.	450/90		03.60
2 split pins			02.00
1 small brass screw for ball cock			00.21
409 ¾ brass tube, 11½ ounces		33	23.72
1¼ " 16½ "		29	29.91
1½ brass tube, 19½ ounces		28	34.12
2¼ " 22½ "		28	39.37

Brass.	Rough.	Finished.
Plates	30 ounces.	27 ozs.
Bottom pieces	26 "	20 "
1¼ nuts	4½ "	4 "
⅝ nuts	1⅜ "	1 "
1¼ swivel	6½ "	4 "
⅝ swivel	3 "	1½ "
Supply nut	1⅜ "	1 "
Bent swivel	3½ "	3 "
Wing p'ce for valve	11 "	8½ "
Top part for valve	12 "	10 "
Bushing for v'lve r'd	½ "	¼ "
Flat core for v'lve r'd	1½ "	1¼ "

Brass.	Rough.	Finished.
Body of ball cock	10½ ounces.	8 ozs.
Plug "	2½ "	2 "
Lever "	½ "	⅜ "
Journals "	1½ "	1 "
Cap for 2¼ tube	7 "	5½ "
1¼ nut	4½ "	4 "
1¼ swivel	6½ "	4 "
Copper 1½ tub'g	3½ "	3 "
	137¾	109⅜

137¾ ounces brass castings @ 18c.	$1 54.97	
Turnings, 28⅜ ounces @ 9c. (per lb.)	15.96	
		$1 39.01
Time:		
Carpenter	12	
Coppersmith	56	
Brass-work	43.53	
Mak'g ball lever and mounting	13	
		$1 24.53
		$7 30.02

If planed off and varnished add 12 cts.

410 COMPLAINANTS' EXHIBIT NO. 22.

Cost List of Single-Charge Injector Tank.

18-in. copper Trombe tanks, size 18 x 10 x 13 outside.

6 feet white wood	3¾c.		22.50
3⅞ lbs. tinned sheet copper	31c.	1	20.12
1 lb. solder	12c.		12
16 tinned tacks			01
⅜ 1 x ¼ flat W. iron	2½c.		00.94
7/16 cast iron	5c.		02.19
1 S. hook			00.50
1 5-inch copper ball			18.75
Board			02
4 2-inch No. 10 W. screws, 319 4 1-inch No. 12 W. screws, 239 } 558	7/10		01.52
Leather washers			04
2 split pins			02
1 small brass screw for ball cock			00.21
½-inch brass tube, 4 ounces	37		09.25
¾ " 5½ "	33		11.35
1 " 5 "	31		10.31
1¼ " 6 "	29		10.25
2¼ " 16¼ "	28		28.44
Riveting and ball-cock wire, 2¼ ozs., 24c.	337		
	67		02.70

	Brass.	Rough.	Finished.
	Bottom piece	31½ ozs.	26 ozs.
	1¼ nut	4½ "	4 "
	⅝ nut	1⅜ "	1 "
	1¼ swivel	6½ "	4 "
	⅝ swivel	3 "	1½ "
	Supply nut	1⅜ "	1 "
	Supply swivel	3½ "	3 "
	Basket of valve	11 "	6 "
	Cap of valve	7 "	5½ "
	Flange of valve	3 "	2½ "
	Bushing	½ "	¼ "
	Flat core	1½ "	1¼ "
411	Body of ball cock	10½ "	8 "
	Plug of ball cock	2½ "	2 "
	Lever of ball cock	½ "	⅜ "
	Journals ball of cock	1½ "	1 "
	Caps for 1-inch tube	1 "	¾ "
		90¾	68⅛

90¾ ounces brass castings, .18	1 02.09	
Turnings, 22⅝ ozs. @ 9c. (per lb.)	12.73	
		89.36
Time:		
Carpenter	07	
Coppersmith	25	
Brass-work	48.96	
Making levers and mounting	13	
		93.96
		$4 43.35

If planed off and varnished add 10c.

COMPLAINANTS' EXHIBIT NO. 23.

Cost List of Complainants' Peters & Donald Tank (Ex. 19).

Peters & Donald's copper tank 20 x 10 x 15½, size of serv. box 16½ x 6½ x 7½.

White wood, 9 ft., 3¾	34
Pine, 2 ft., 24.00	05
Tinned copper, 5¼, 31c.	1 63
Solder, 1½, 12c.	18
Time, coppersmith	75
Time, carpenter	10
8⅝ brass and time of finishing	2 15
1¼ brass tubing, 30c.	37
1 9/16 brass pipe, 28c.	44
3 ft. rubber tubing	18
1½ brass elbow	09

	1½ valve c-pling	26
412 & 413	1½ tee	04
	Ball lever and screws and mtg. tank	40
Copper ball		19
2 S hooks		01
1 split pin		01
		$7 19

414 In the Circuit Court of the United States for the Eastern Division of the Eastern District of Missouri.

HENRY HUBER and JAMES E. BOYLE *vs.* N. O. NELSON MANUFACTURING CO. } In Equity. No. 2905.

It is stipulated by and between counsel for complainants and counsel for defendant in the above-entitled cause that all exhibits introduced in evidence by complainants may remain in the possession of Paul Bakewell, Esq., solicitor for complainants, at St. Louis, Mo., until final hearing, subject, however, to this understanding: In case defendant's solicitors or either of them should desire to have any of complainants' exhibits filed in the clerk's office of this court prior to the final hearing of this cause, upon serving five days' written notice upon Paul Bakewell, the said Paul Bakewell will file said exhibits with the clerk of the circuit court of the United States for the eastern division of the eastern district of Missouri.

It is further stipulated that any exhibits introduced in evidence by defendant in this cause may remain in the possession of defendant's counsel, at St. Louis, Mo., until final hearing of this cause, subject, however, to this understanding: That in case complainants' counsel desire to have any of said exhibits filed with the clerk of the court in this case, upon five days' notice in writing to defendant's counsel or any of them, defendant's counsel will file such exhibits with the clerk of the circuit court of the United States for the eastern division of the eastern district of Missouri.

PAUL BAKEWELL,
Solicitor of Complainants.
TAYLOR & POLLARD,
Solicitors of Defendant.

St. Louis, April 12, 1888.

415 In the Circuit Court of the United States for the Eastern Division of the Eastern District of Missouri.

HENRY HUBER and JAMES E. BOYLE *vs.* N. O. NELSON MANUFACTURING COMPANY. } In Equity.

It is hereby stipulated and agreed that the testimony of Peter White and C. M. Woodward, taken in behalf of the defendant in the

above-entitled cause, before George M. Block, Esq., was taken in pursuance of a stipulation in said cause and upon proper notice given, and that said testimony may be read in evidence on the hearing of said cause with the same force and effect as if taken before a special examiner duly appointed by the court.

And it is further stipulated and agreed that the further taking of testimony on the part of the defendant shall be postponed until the 30th day of June, 1888, on which day, at the hour of ten o'clock in the forenoon or thereabouts, the defendant may proceed further with the taking of its testimony in said cause, at the law office of Taylor & Pollard, in the city of St. Louis, before said Geo. M. Block, Esq., as special examiner, subject to adjournment from day to day until defendant's testimony is completed, but with the understanding that the same is to be completed within fifteen days after the above-named date; and said testimony and all exhibits put in evidence may be used on the hearing of said cause with the same force
416 and effect and subject to like objections as if taken before an examiner appointed by the court in pursuance of the equity rules governing the same.

PAUL BAKEWELL,
Solicitor for Complainants.
TAYLOR & POLLARD AND
B. F. REX, *Solicitors for Defendant.*

St. Louis, June —, 1888.

417 In the Circuit Court of the United States for the Eastern Division of the Eastern District of Missouri.

HENRY HUBER and JAMES E. BOYLE, Complainants,
vs.
N. O. NELSON MANUFACTURING COMPANY, Defendant.

Testimony taken on the part of the defendant before me, George M. Block, as special examiner, in pursuance of a stipulation agreeing upon me as such examiner, entered into between Paul Bakewell, solicitor for complainants, and Taylor & Pollard and B. F. Rex, solicitors for defendant, at the office of Taylor & Pollard, rooms 408 and 410 American Central building, northeast corner of Broadway and Locust street, city of St. Louis, State of Missouri, in said district, commencing at the hour of eleven o'clock a. m., on the 5th day of June, A. D. 1888.

Paul Bakewell, Esq., appeared in behalf of the complainants, and Messrs. B. F. Rex and S. N. Taylor in behalf of the defendant.

Here counsel for defendant offered in evidence a stipulation and pamphlet attached to said stipulation entitled "Patent Law Amendment Act 1852," and also "16 Victoria, chapter 5," entitled "An act to substitute stamp duties for fees on passing letters
418 patent for inventions, and to provide for the purchase for public use of certain indexes of specifications," and that the same be marked "Defendant's Exhibit No. 6, George M. Block, spe-

cial examiner," and the same is received in evidence and marked accordingly.

Here counsel for defendant next offers in evidence a stipulation touching the publishing to the world in the Commissioner of Patents' Journal, by the commissioner of patents, the following statement, to wit: "Patents which have become void in the week ending the 9th day of April, 1881, through non-payment of one hundred pounds stamp duty," the words and figures following: "1207, Stewart Peters, of Glasgow, in the county of Lanark, North Britain, coppersmith, and William Donald, of same place, plumber, for an invention of improvements in and connected with water-closets, and in part applicable for the supply or discharge of various liquids, dated 7th of April, 1874," and asks to have said stipulation admitted in evidence as Defendant's Exhibit No. 7; and the same is received in evidence and marked "Defendant's Exhibit No. 7, George M. Block, special examiner."

Objected to by complainants' counsel as immaterial.

Here counsel for the defendant offers in evidence copy of the Commissioner of Patents' Journal, published Friday, April 15,
419 1881, calling particular attention to page 1028 thereof and to the following language upon said page, to wit: "Patents which have become void in the week ending the 9th day of April, 1881, through the non-payment of the one hundred pounds stamp duty, 1207, Stewart Peters, of Glasgow, of the county of Lanark, North Britain, coppersmith, and William Donald, of the same place, plumber, for an invention of improvements in and connected with water-closets, and in part applicable for the supply or discharge of various liquids, dated 7th of April, 1874," which journal purports to be published by authority of the British commissioner of patents, and the same is received in evidence and marked "Defendant's Exhibit No. 8, George M. Block, special examiner."

Counsel for complainants admits that the exhibit just offered is a true copy of the Commissioner of Patents journal, published Friday, April 15, 1881; but counsel for complainants objects to the introduction of said exhibit in evidence on the ground that it is incompetent, irrelevant, and immaterial to any issue in this case; that it is secondary evidence in so far as it may be intended to prove by this that the stamp duty on the Stewart Peters and William Donald patent was not, in fact, paid.

Here defendant's counsel offers in evidence duly certified copy of "Patent Register" or rather "Entries from Patent Register of Great Britain," relating to the Stewart Peters and William Donald patent,
issued April 7, 1874, numbered 1207, and asks that the same
420 be received in evidence and marked "Defendant's Exhibit No. 9," and the same is by leave received in evidence and marked "Defendant's Exhibit No. 9, George M. Block, special examiner."

Counsel for complainants asks counsel for defendant for what purpose he introduced said certificate.

Counsel for defendant says that he introduces the same in evi-

dence as showing or tending to show all that the Patent Register exhibits touching the Peters and Donald patent, 1207, and particularly to show that on the 7th day of April, 1881, said letters patent, No. 1207, issued to Stewart Peters and William Donald expired by reason of their failure to pay the one hundred pounds stamp duty due on that day, and that the records of said Patent Register show that fact.

Counsel for complainants thereupon states that they make no objection to the character of the certificate and it may be considered as if duly authenticated, but he objects to the same as irrelevant and immaterial.

Here counsel for the defendant offers in evidence office copy of letters patent No. 210,003, dated November 19, 1878, issued to W. Bunting, Jr., for improvement in water-closets, and asks that the same be received and marked "Defendant's Exhibit No. 10," and the same is received in evidence and marked accordingly.

421 Complainants' counsel asks defendant's counsel for what purpose he introduces in evidence this Bunting patent just offered.

Counsel for the defendant says as supporting certain of the defenses set up against the Boyle reissue sued on, the particulars of which he has not time now to state.

Counsel for the complainants asks whether this Bunting patent is introduced as anticipating the invention claimed by any one of the claims of the Boyle reissued patent in suit.

Counsel for defendant declines to answer further than he has already answered. If counsel for complainants has any objection to the admission of the patent other than the fact that it is not certified to by the Commissioner of Patents, let him state the name on the record.

Counsel for complainants states that he is willing to admit any competent and relevant and material patents, set up in defendant's answer to this controversy, offered in evidence by defendant, providing they are copies of United States letters patent, without requiring that they be duly certified; but counsel for complainants submits that he is entitled to know the purpose for which defendant's counsel offer in evidence a copy of any patent or any other exhibit, so that complainants' counsel may then be able to determine whether or not he will make any objection to the intro-

422 duction of the same in evidence. Counsel for defendant has stated that this Bunting patent is offered as supporting certain of the defenses set up against the Boyle reissued patent, and refuses to answer more definitely. Therefore complainants' counsel objects to the introduction in evidence of this Bunting patent, because defendant's counsel will not answer the question more definitely; and, furthermore, complainants' counsel states that if this Bunting patent is offered in evidence as anticipating any invention claimed in the Boyle reissued patent, it is incompetent, irrelevant, and immaterial, in that it appears on the face of this Bunting patent that it does not anticipate any invention claimed in the Boyle reissued patent.

Counsel for defendant offers in evidence an office copy of the specification and drawings of letters patent of the United States granted *of* D. M. Shapley, May 8, 1866, for an improvement in ejecting pumps, numbered 54615.

Counsel for complainants requests that defendant's counsel state on the record their purpose in offering in evidence the specification and drawings of this Shapley patent.

Defendant's counsel answers that it is introduced for two purposes: First, to show a lack of invention in the alleged improvement described in reissued letters patent No. 10826, sued on in this case, and especially that part of said improvement claimed
423 in claims 1 and 2, as well as each and all others of the improvements claimed in said reissued patent; also showing a lack of novelty in the alleged improvement shown in said reissued patent at the time it was produced by the patentee, and said exhibit is marked "Defendant's Exhibit No. 11."

Complainants' counsel objects to the introduction in evidence of this Shapley patent of May 8, 1866, defendant having stated his reasons for introducing the same in evidence, on the ground that the same is incompetent, irrelevant, and immaterial for such purpose, it appearing from the claim of the Boyle reissued patent referred to that all of those claims are for combinations of elements, and that this Shapley patent does not show the combination of any claim of the Boyle reissued patent.

Counsel for defendant offers in evidence office copy of the specifications and drawings of letters patent of the United States No. 212,133, dated February 11, 1879, granted J. Demarest for an improvement in valve for water-closet cisterns, said patent being offered in evidence to show the alleged improvement described in claim in said reissued letters patent was not novel at the time it was produced by the patentee and not a patentable invention at that time, and said exhibit is marked "Defendant's Exhibit No. 12."

Complainants' counsel objects to the introduction in evi-
424 dence of this Demarest patent of February 11, 1879, defendant having stated his reasons for introducing the same in evidence, on the ground that the same is incompetent, irrelevant, and immaterial for the purposes for which it is introduced, it appearing from the claims of the Boyle reissued patent referred to that all those claims are for combinations of certain elements named therein, and that this Demarest patent does not show or describe any invention claimed by the Boyle reissued patent.

Thereupon, by consent of all the parties hereto, the taking of this deposition was continued until Wednesday, the 6th day of June, 1888, at nine o'clock a. m.

[SEAL.] GEORGE M. BLOCK.
Notary Public and Special Examiner.

Pursuant to adjournment, at nine o'clock a. m., June 6, 1888, the same parties appearing as before, the taking of this deposition was continued as follows:

PETER WHITE, a witness on behalf of the defendant, of lawful age, being produced, sworn, and examined on the part of the defendant, deposes and says:

Counsel for defendant here states, before propounding any questions to the witness, that the exhibit marked "Defendant's Exhibit No. 9" is also offered, intended to be used in evidence in this case for the purpose of showing that Stewart Peters and William Donald abandoned to the world the alleged invention shown and described in claim in letters patent No. 260,232, sued on in
425 this case, before said letters of the United States were applied for and before the assignment of said alleged invention was made by them under which Henry Huber claims by mesne assignments.

Complainants' counsel objects to said Defendant's Exhibit 9, inasmuch as said exhibit does not prove the fact intended to be proved by it, on the ground that it is incompetent, not being the best evidence of the fact which it is intended to prove by said exhibit, the statement of counsel being a mere inference of what defendant intends to prove by said exhibit and not being proved by said exhibit.

Counsel for defendant further states that Exhibit 11 is offered in evidence for the further purpose of showing the state of the art as to injector pumps prior to the alleged invention described and claimed in reissued letters patent sued on in this case, No. 10826.

Counsel for complainants objects to the introduction of the said Exhibit 11 on the ground that the state of the art as to injector pumps is immaterial to any issue in this case or to any issue framed on the said Boyle reissued patent, the said Boyle reissued patent not claiming simply an injector or an injector pump, but claiming combinations of various elements, of which an injector is merely one element.

Counsel for defendant further states that Exhibit No. 12 is
426 offered in evidence for the further purpose of showing the state of the art prior to the alleged invention or production by J. E. Boyle of the flushing apparatus shown and described and claimed in reissued letters patent 10826, sued on in this case as to flushing apparatus for water-closets.

Complainants' counsel objects to the introduction in evidence of the said Exhibit 12, as it has no bearing on the state of the art relative to the invention claimed by the said Boyle reissued patent.

Counsel for defendant offers in evidence certified copy of letters patent of the United States of America granted to James B. Eads for an improvement in pumps, dated the 5th day of July, 1870, and numbered 105,056, for the purpose of showing the state of the art as to injector pump prior to the alleged production by J. E. Boyle of the alleged improvement described and claimed in reissued letters patent 10826, sued on in this case, and said certified copy of said patent is marked "Defendant's Exhibit No. 13."

Complainants' counsel objects to the introduction of said Defendant's Exhibit 13, on the ground that it is irrelevant, incompetent, and immaterial for the purposes for which it is offered, the state of

the art as to injector pump not being relevant to the question of the validity or of the infringement of the claims of the said Boyle reissued patent, and said Exhibit 13 being solely for an injector sand pump.

427 Direct examination by Mr. REX:

Q. 1. Mr. White, please state your name, age, and occupation.

A. My name is Peter White; I will be forty-five years of age on the 12th day of next November; I am now acting as foreman for the N. O. Nelson Manufacturing Company over the plumbing supply department.

Q. 2. You are master mechanic of plumbers' supplies, are you not?

A. Yes, sir.

Q. 3. How long have you been in the plumbers' supply business?

A. Ever since I went at the trade, particularly for twenty-three years. I have been acting as foreman that time.

Q. 4. What experience have you had in the construction and manufacture of water-closets?

A. I have had more experience than any man in St. Louis in that line.

Q. 5. What kinds of water-closets have you, during your career, manufactured and repaired?

A. I have manufactured pan closets, sanitary plunging closets, and tank flushing closets, pneumatic syphon closets, and various kinds of common copper closets, known in the trade as swing-seat or copper closets.

Q. 6. Are you familiar with the contents of letters patent No. 260,232, granted to Henry Huber, as assignee of S. Peters and W. Donald, of which I now hand you a certified copy marked "Complainants' Exhibit 1" (handing same to witness)?

A. Yes, sir; I am.

428 Q. 7. Do you understand the mechanism described in that patent and shown in the drawings thereto attached?

A. Yes, sir.

Q. 8. Do you understand the operation of that closet described in that patent?

A. Yes, sir.

Q. 9. You have constructed for the use of the defendant in this case, as an exhibit in this case, a closet made in accordance with that specification, have you not?

A. Yes, sir; I have.

Q. 10. Have you tested the operation of the closet so constructed?

Complainants' counsel objects to the question and objects to any answer thereto at present, the witness having stated that he has constructed a water-closet made in accordance with the said patent No. 260,232, said exhibit, Complainants' Exhibit 1, and complainants' counsel submits that the said closet alleged to have been made by the witness must be introduced in evidence or its absence accounted

for before the witness answers said question, in order that it may be determined whether or not the closet, concerning which the witness is about to testify, is, in fact, made in accordance with the said Peters and Donald patent, marked "Complainants' Exhibit No. 14.

A. Yes, sir; I have.

Defendant's counsel here offers in evidence flushing apparatus for water-closet, which is marked "Defendant's Exhibit No. 14," and the same is received in evidence and marked accordingly, and the same is identified by the witness as the flushing apparatus constructed by him and tested.

429

Complainants' counsel objects to the introduction of said exhibit, inasmuch as it appears from said exhibit that it is not made in accordance with the said letters patent of Peters and Donald, 260,232, and as being incomplete, all the parts necessary to make it a completely operative device in accordance with the said Peters and Donald patent not being present.

Counsel for the defendant here states that all the other parts used in connection with this tank and essential to make it operative will be produced before the closing of the witness' testimony.

Q. 11. Please state what parts are shown in this drawing as parts of the Peters and Donald closet and which are used in its operation and construction, beginning with the flushing operation or tank.

A. The flushing apparatus or tank; also a flushing chamber underneath said tank, with two valves in said flushing chamber, one controlling the supply of water from the flushing chamber to the flushing pipe 14, into bowl 1 of the closet, and a supply valve, 13, having a bleeder pipe connected at supply valve in tank, and also connected at the other end below valve H of flushing chamber which connects to flushing pipe 14, and a bowl or basin, an upper trap, and discharge passage, and a lower trap in said passage, and an air space, 4, between said traps, an air pipe, 5, leading upward and downward through the tank and into the flushing chamber 6; also air valve 16, being attached to pipe 5, said air or check valve so constructed as to open outward by the pressure from the flushing chamber underneath it. No. 10 is a lever which operates both valves, Nos. 11 and 8, at the same time. When the lever is pulled down both valves are lifted together, valve 11 shutting off the supply of water from the tank to the flushing chamber, and valve 8, being lifted from its seat, allows the water in flushing chamber to rush through flushing pipe 14 into the bowl, at the same time forming a suction through pipe 5, which connects to air space 4, in the discharge passage, sucking the air into said flushing chamber while the water is passing into the bowl, this producing immediately, as quick as the pull is lifted, a syphon action of the upper trap and a thorough cleansing of the bowl, while the water continues to flow down from the flushing chamber. When the lever is released valves 8 and 11 drop, valve 8 shutting off the discharge from the flushing cistern, and valve 11 allowing the flushing cistern to become filled from the water in the tank through the

430

orifice C and forcing the foul air which has been sucked from the air space 4 in the discharge passage into said flushing chamber and out through pipe 5, raising check valve 16 and passing without the room.

Q. 12. What functions does the flushing chamber marked in the drawing 6 perform?

Complainants' counsel objects to the question as calling for hearsay testimony and secondary evidence, the said patent to Peters and Donald, No. 260,232, stating the functions performed by the device referred to in question.

A. It performs the functions of an aspirator; also as thoroughly cleansing the bowl and at all times preventing sewer gas from entering the room, and also is a measuring device.

431 Q. 13. You have called this an aspirator. State what you consider an aspirator, generally speaking.

A. An aspirator is a form of a suction pump in which a suction is produced by the water falling through it.

Q. 14. Is there any way in which the gas or foul odors which may accumulate in the space between the two traps can escape into the room, either during the operation of the closet or when the operation has ceased?

A. No; there is no possible way for the sewer gas to escape, either in the use of the closet or when it is at rest, because the flushing chamber under the tank being always filled when not in use, forming a seal against sewer gas that might arise through air pipe 5, and when in use is also sealed by valve 11 being pulled above the orifice C, preventing any possible chance for sewer gas to enter while it is flushing or syphoning the bowl.

Q. 15. State whether or not there is any means shown in this drawing and mentioned in the patent for allowing sewer gas to escape from the space between the two traps shown and out into the outer air therefrom.

A. Yes, sir; check valve shown in pipe 16, which also connects with air pipe 5, serves to convey without the room all foul gases which are taken up by pipe 5 and into flushing chamber beneath the tank and then out into the open air.

Q. 16. Is it necessary, in order that this closet should operate, that the trap leading to the bowl should be sealed when the operation is entirely started?

A. Yes, sir.

432 Q. 17. State what means there are, if any, in this closet for filling the trap leading from the bowl when the bowl has been emptied or after the closet has been in operation.

A. After the water in the flushing chamber has run into the bowl and the lever or pulleys released, the water in the upper tank immediately passes through the supply valve and down into the flushing chamber, thereby filling the flushing chamber completely; at the same time water is permitted, while filling the tank, to pass through the bleeder pipe which connects below valve 8 with flushing pipe 14 and continues to supply the bowl with a small stream

until the water in the upper tank rises to a certain line, which serves to close off the pressure in the service pipe, and also shutting off the water from the bleeder pipe, when immediately the water in the flushing pipe falls back into the bowl.

Q. 18. When, after the valve 8 is allowed to seat, water remains in pipe 14, leading from the flushing chamber to the bowl, what becomes of it?

A. It immediately falls into the bowl.

Q. 19. Is the seal which is affected in this closet in the trap leading from the bowl a perfect or an imperfect one?

A. A perfect one.

Q. 20. What is your opinion, as one conversant with all manner of water-closets, concerning the operativeness and other desirable qualities?

A. It is the best pneumatic closet I have ever seen, covering all points which the latest improvements in water-closets claim to cover, especially preventing sewer gas into the room.

Q. 21. Please examine complainants' exhibit marked "Complainants' Exhibit Trombe Tank." State whether you saw a closet having a bowl and traps substantially like the one shown in the Peters and Donald patent you have in your hand and having the tank fixtures connected therewith like that one.

433 A. Yes, sir; I have.

Q. 22. Will you please state whether or not the wash in the Peters and Donald closet is as thorough and continuous as the closet in which the Trombe tank is used, similar to the one marked "Complainants' Exhibit Trombe Tank"?

Complainants' counsel objects to the question as incompetent, irrelevant, and immaterial, the operativeness of the Boyle reissued patent or the Peters and Donald patent in suit not being questioned by answer; and, furthermore, if it is intended to show by this question and its answer that devices of the Boyle reissued patent are less effective than the devices of the Peters and Donald patent in suit, it cannot be shown by any such testimony, the proportions of the respective parts in each of said patents relating to the wash not being given in either of said patents and the said patents not being limited to any particular proportion of the parts relating to the wash.

A. Yes.

Q. 23. State the character of the suction and its strength in the closets constructed like the Peters and Donald closet.

A. The suction in the Peters and Donald closet produced by the flushing chamber or aspirator principle through a flushing chamber is stronger than that of an injector, for the reason during its action there being nothing in the way of allowing the suction of air freely from the air space in passage 4 into the flushing chamber.

Q. 24. State how a closet constructed in accordance with

434 the Peters and Donald patent, which you have in your hand, No. 260,232, operates, with regard to quickness, in creating the suction and cleaning the bowl.

A. The syphon action is created immediately as the water passes into the flushing pipe which leads to the bowl.

Q. 25. In practice how high is the tank placed in tank closets above the bowl, as a general rule?

A. From six to seven feet, from the top of the bowl to the bottom of the tank.

Q. 26. Do you know from actual experience and observation whether a closet constructed in accordance with letters patent 260,232, which you have in your hand, and having the bottom of the tank placed seven feet above the top of the bowl would operate perfectly and thoroughly in all respects? If so, state what the facts are.

A. Yes, sir; it is a little stronger suction at seven feet than it would be at six.

Q. 27. Between what limits have you known a closet of this kind to operate?

A. I have operated it with four feet from the top of the bowl to the bottom of the tank; also as high as eight feet three from the top of the bowl to the bottom of the tank, and found it to work perfectly at the different heights.

Q. 28. State whether or not a closet constructed in accordance with Complainants' Exhibit 1, which I have referred to as the Peters and Donald patent, is or is not liable to get out of order and what your experience has been, if you have had any.

A. It is perfectly simple and is less liable to get out of order in practice than an injector and the fact that the valve mech-
435 anism in the flushing apparatus being of the simplest kind, as have proven themselves in wear in the past.

Q. 29. How long have you known closets constructed in accordance with the specifications marked Complainants' Exhibit 1 to be used?

A. Since about the middle of last February until this morning, when it was taken down and brought here as an exhibit.

Q. 30. Did it ever get out of order during that time?

A. No, sir.

Q. 31. Did it work at the end of the time as well as it did at the beginning?

A. Yes, sir.

Q. 32. I now call your attention to the valve in pipe 16, shown in the drawing forming a part of Complainants' Exhibit 1, through which air may escape when there is sufficient pressure to the outside of the building, provided there are proper pipe connections. State whether or not that valve is liable to get out of order and what its durability is.

A. This valve can be made of leather or gum and I am satisfied will wear as long as the tank itself, it having to raise or fall but very little to allow the air to pass out or to prevent the air from coming in. I can see no chance for it to get out of order before or as soon as any valve connected with the flushing apparatus.

Q. 33. Referring to the drawing just mentioned, please state whether valve 11 and valve 8 are simple or the reverse, and whether or not they are liable to get out of order.

A. They are perfectly simple and will wear as long as any valve can wear performing the same work.

436 Q. 34. Is a closet of this description easy to make or difficult, and what is the character of the work upon it?

Objected to by complainants' counsel as incompetent and immaterial.

A. It is very simple to make, being so easy to fit the flushing chamber to the tank, and the valve mechanism which operates both tank and flushing chamber are of the simplest kind of valve manufactured in our line.

Q. 35. Is it difficult or is it not to make the joints of the vacuum chamber, numbered in the drawing 6, tight, so as to prevent entrance of air when a vacuum is to be created in the chamber?

Objected to by complainants' counsel as immaterial.

A. No, sir; it is not difficult, as the flanges on both tanks fit together, if castings be perfect, and the joint, which is usually made between those flanges, are of paper and putty, which are very simple to make and easy to put together.

Q. 36. Are these joints or any part of the closet liable to be affected when a vacuum is to be created in the flushing chamber or vacuum chamber or injured or opened by the creation of a vacuum?

A. No, sir; not any more than any air-tight joint might be.

Q. 37. Would any air-tight joint get out of order in that position where properly made?

Objected to as incompetent, irrelevant, and immaterial.

A. No, sir.

Q. 38. Is the flushing apparatus and pipes connected therewith, shown and described in Complainants' Exhibit 1, an expensive one to make?

437 Objected to as incompetent and immaterial.

A. No, sir.

Thereupon, by consent of all the parties hereto, the further taking of this deposition was continued until Thursday, the 7th day of June, 1888, at nine o'clock a. m.

GEORGE M. BLOCK,
[SEAL.] *Special Examiner and Notary Public.*

Pursuant to adjournment, at nine o'clock a. m., June 7, 1888, the same parties appearing as before, the taking of this deposition was continued as follows:

Defendant's examination is here interrupted for the purpose of making the following admission: Defendant admits Complainants' Exhibit 11, containing the cover and pages 5, 6, 7, and 8 of a catalogue, is in fact the cover and the said pages of a catalogue published

and circulated by defendant prior to the filing of the bill in this suit.

Counsel for complainants, for the purpose of evidence in this case, admit that the circular marked "Defendant's Exhibit No. 15" was issued by Henry Huber & Co., of which Henry Huber, plaintiff, is the senior member, and was in circulation by them before the bringing of this suit or soon thereafter.

Complainants' counsel objects to the introduction of said Exhibit 15 in evidence as incompetent, irrelevant, and immaterial to any issue in this case.

Continuation of the testimony of PETER WHITE:

438 Q. 39. When a vacuum is created in a vacuum chamber in the closet shown and described in the letters patent marked "Complainants' Exhibit No. 1," is the tendency of that vacuum to open or close the joints between the reservoir tank and the vacuum chamber?

Objected to as immaterial.

A. The tendency of the vacuum being created in the flushing chamber, the water falling from the flushing chamber into the bowl acts as a piston, consequently creating a downward pressure of the upper tank flanges against the flange of the flushing chamber, thereby causing both flanges to be made tighter by the vacuum in the use of the closet.

Q. 40. I now hand you Complainants' Exhibit 2, being letter-patent granted J. E. Boyle for flushing apparatus for water-closets, reissued April 19, 1887, numbered 10826. Please state whether or not you are familiar with that patent.

A. Yes, sir; I am.

Q. 41. Are you familiar with the operation of closets made in accordance with letters patent just referred to?

A. Yes, sir; I am.

Q. 42. Will you please examine "Complainants' Exhibit 'Trombe' Tank," and state whether or not you have seen tanks of that kind in operation?

A. Yes, sir; I have.

Q. 43. Please examine the drawings of "Complainants' Exhibit 2," being Boyle reissue, sued on, and state which, if any, of the figures in the drawings show a tank of that description.

A. Figure 1 is the tank of that description, with the excep-
439 tion of the sealing cup, which seals the overflow in the act of flushing the bowl, is in another part of the tank of said exhibit.

Q. 44. Is the overflow pipe in the same position in that drawing as in the exhibit?

A. No, sir.

Q. 45. Beginning with the flushing apparatus shown in figure 1, passing thence to the bowl and traps, please state what the parts of the closets illustrated in figure 1 are.

A. The flushing apparatus E is a reservoir tank; M is an over-

flow pipe which connects to a supply valve which leads from the reservoir tank E and down into a sealing cup in said flushing chamber E; F is the flushing chamber; E is an air-bell pipe which is connected at the bottom of reservoir tank E; *r* is the pipe which leads from the inside bell pipe to the injector I; *n* is the vacuum pipe closed at the top, and *e* is the suction or air pipe which leads from the air space *d*, in the passage of the discharge pipe of the bowl C and D; *f* is a pipe leading out of the top of bell pipe F; *t* is a lever which operates valve *h*; I is the body or cylinder of the injector; *i* is the nozzle to the injector; *l* is the flushing pipe which leads from the flushing chamber F to the flushing rim of the bowl *k*.

Q. 46. What are the relative sizes of the opening from the tank E into the flushing chamber F, closed by valve *h* when at rest, and the opening from the flushing chamber F into the flushing pipe *l*?

Complainants' counsel objects to the question as incompetent, irrelevant, and immaterial to any issue in this case, complainants contending that defendant infringes only the first and second claims of reissued patent of Boyle, No. 10326, and the relative proportions of the parts named in the question having no bearing upon the inventions claimed by claims 1 and 2 of the said patent, and being relevant, if at all, to claim 6 of the said reissued patent and to no other claim of the said reissued patent, said claim not being involved in this controversy.

440

A. The relative size of the opening from reservoir tank E, which leads into flushing chamber F,—three and a quarter inches at *h* and one and one-eighth at the discharge jet or nozzle which leads into the injector from the bottom of flushing chamber F.

Q. 47. What are the objects in having this valve *h* and the opening closed thereby larger than the opening leading from the flushing tank?

Objected to as incompetent, the patent itself being the best evidence as to the object of the arrangement referred to.

A. The objects are to procure a proper syphoning of the bowl. If the opening from the reservoir tank E into the flushing chamber F were of the same diameter, there could not be sufficient suction through the injector to cause a cleansing of the bowl, because the vacuum pipe would never become sealed.

Q. 48. Has the size of the opening from the tank E to the tank F anything to do with the length of time which is necessary to hold onto the pull *q* in order to obtain an operation of the closet?

Last objection here repeated.

A. Yes, sir; the lever has got to be held down so as to keep the valve *h* from its seat for a minute or two, until the water has raised in the flushing chamber F to a sufficient height to seal the vacuum pipe, so as to produce a proper syphon action of the bowl.

441

Q. 49. Please turn to figure 6 and state why the valve *h*, there shown, is made larger than the opening from the flushing chamber F into the injector.

Last objection here repeated.

A. So as to fill the flushing chamber rapidly.

Q. 50. If there were no flushing chamber beneath the reservoir tank, would it have any effect upon the length of time which it would be necessary to hold onto the pull in order to obtain a wash and a proper flushing of the bowl?

Objected to as vague, incompetent, and immaterial.

A. The flushing would be much faster obtained in the bowl, especially if valve *j* were not in the injector.

Q. 51. If the valve *h*, in figure 1, were not held up long enough by the person using the closet to allow the water to reach the bottom of the air bell, would there be any operation of the closet and would the contents of the bowl be sucked out or left in place?

Objected to as suggesting an impossible hypothesis if the question relates to the invention described in the Boyle reissued patent and particularly referred to in figure 1 of that patent, and as incompetent and immaterial.

A. There would be a partial syphoning of the bowl only.

Q. 52. Have you ever had any experience in the manufacture of injectors?

Objected to as not relevant to any issue in this case.

A. Yes, sir; I have.

Q. 53. What experience have you had in their manufacture?

Same objection.

442 A. I have made them at different times and tried them at different times for twenty-three years.

Q. 54. Have you ever manufactured injectors like the one shown in figure 6 of the Boyle reissue sued on?

Same objection.

A. Yes, sir; I have.

Q. 55. How long did you begin to manufacture them?

Same objection.

A. Twenty-three years.

Q. 56. When did you first see an injector of this kind used as a suction pump where the power was that of water falling through the injector?

Counsel for complainants asks defendant's counsel what he refers to in these questions as injector of figure 6 of the Boyle reissued patent and asks him please to designate by referring to the letters of reference of that figure of the drawing.

Counsel for defendant replies that the injector referred to is the injector I.

Last objection repeated.

A. In the city of St. Louis, twenty-three years ago, I made and fit up injectors similar to the one lettered I in figure 6, in the hulls of steamboats, for pumping out water that leaked into them.

Q. 57. Were they operated by steam or water?

Objected to as incompetent and immaterial.

A. By steam.

Q. 58. Have you ever known injectors of this sort to be operated by the fall of water through them; and, if so, how long ago you first saw injectors of this kind used?

443 Objected to as leading, vague, and incompetent and immaterial.

Question withdrawn.

Q. 59. Please state what, if anything, you know concerning cases where injectors have been used as suction pumps and the power used to create the suction has been water, prior to the year 1883.

Objected to as incompetent and immaterial.

A. Twenty-three years ago, when I first made those pumps, it was the usual custom in the shop to test those pumps by hydrant pressure, holding the pump with the suction pipe running down into a water bucket and holding it about three or four feet from the top of the water bucket and causing the water to be sucked out through the injector by the hydrant pressure.

Q. 60. How long has it been generally known by those who manufactured injector pumps and knew how to manufacture them and use them that water could be used as the power as well as steam for the purpose of creating a suction?

A. Twenty-three years, to my knowledge.

Q. 61. I will ask you, then, whether you consider that there is anything novel in using an injector to create a suction in an air pipe by means of the fall of water through the nozzle of the injector, or was anything novel in such an application of an injector in the year 1880?

Objected to by complainants' counsel as utterly incompetent, irrelevant, and immaterial to any issue in this case, and if it is intended to prove by this question put to the witness that the subject-matter of the first and second claims or of any claims of the
444 Boyle reissued patent in suit was not new at the time of Boyle's invention or at the time he applied for his letters patent, reissued as No. 10826, the question is totally incompetent, as asking the witness to determine one of the questions before the court and concerning which the opinion of the witness is totally incompetent and immaterial.

A. No; I consider there was no novelty in the use of the injector as a well-known pump, which were used for sucking water for years, and sucking air also, long prior to 1880.

Thereupon, by consent of all the parties, the further taking of this deposition was continued until two o'clock p. m. on the same day.

GEO. M. BLOCK.

[SEAL.] *Special Examiner and Notary Public.*

Pursuant to adjournment, at two o'clock p. m., Thursday, June 7, 1888, the same parties appearing as before, the taking of this deposition was continued as follows:

Continuation of the testimony of PETER WHITE:

Q. 62. Supposing the tank E of a closet constructed in accordance with the figure 1 of the Boyle reissued patent sued on and the trap in the bowl and below the bowl were all supplied with water, as shown in the drawing of figure 1 of said reissued patent, and you wished to empty the bowl of its contents, state what you would do in order to start the operation of the flushing apparatus and how the closet would operate.

A. When this valve *h* in tank E is lifted by the lever *p*,
445 which pull-chain connects to in tank E, the water flows rapidly into flushing chamber F and is filled much quicker on account of the large size of the opening from tank E to flushing chamber F than the discharge of flushing chamber F at discharge *i*, and the bell of pipe *n* is sealed; then the pumping commences and continues to pump out the bowl until the water lowers in flushing chamber to the end of bell pipe *n*, when the pumping ceases, the air being sucked through the air pipe *e* down in the bell pipe *r* and into the injector and out the bowl and into the room; part of the air coming down through pipe *n*, passing into the flushing chamber, may pass out through bell *f* and out through small pipe *f* outside the building.

Q. 63. What are the defects, if there are any, of a closet constructed in this way?

Objected to as leading and as assuming that defects exist in the construction referred to, no defects having been shown to exist.

A. First, there is always access of the foul air between the two traps to pass into the room; second, in the use of the closet if the pull-lever is pulled and the valve lifted and held for only a short time, not water enough being let into the flushing chamber and not sealing the bell pipe, there is no pumping. If there be water enough to a little more than seal the bell pipe the pumping is started, partly taking the soil over and down into the trap B, when the water line in the flushing chamber falls below the bell in the vacuum pipe, immediately breaking the vacuum, which stops the pumping, the result of which the foulness in the soil passage between the two traps can freely pass into the room.

Q. 64. Where an injector is used to perform the pumping in a water-closet of this character, does or does not the foul air
446 which is sucked up through the suction pipe *e* pass down with the flushing water and into the bowl and thence into the room?

Objected to as vague, misleading, and incompetent and immaterial, and further objected to as technically leading.

A. It does.

Q. 65. What becomes of the air which is sucked up through the suction pipe where an injector is used in a closet of this character to perform the pumping?

A. The greatest proportion of the air is brought down the flushing pipe with the water and into the room, and a portion of it enters the flushing chamber and can pass out of or down the flushing pipe and into the room after the operation ceases.

Q. 66. Is Complainants' Exhibit "Trombe" Tank of the usual size sold by them?

Objected to by complainants' counsel as incompetent, the witness not appearing to be familiar with the tanks as made and sold by Huber & Co.; and it is further objected to as immaterial to any issue in this case.

A. Complainants' Exhibit "Trombe" Tank is the only size I have ever seen yet.

Q. 67. State whether or not you have seen other Trombe tanks which have been sold by Huber & Co. which are similar to the one before you.

Objected to as immaterial.

A. I have.

Q. 68. Do you know how much it would cost to construct a water-closet flushing apparatus in accordance with the Peters and Donald patents sued on, which would give the same amount of flush at each operation that a tank constructed like Complainants' Exhibit "Trombe" Tank would?

447 Objected to as incompetent and immaterial; and it is furthermore objected to on the ground that no foundation is laid for the question, it not appearing that the witness has manufactured at wholesale flushing apparatuses like those disclosed by the Peters and Donald patent.

A. Six dollars.

Q. 69. How do you know that a closet of this kind would cost that amount?

A. Because being now manufacturing tanks, knowing the weight and cost of the material which it contains, and having carefully figured on it is why I know that that would be the price.

Q. 70. State whether or not you know how much it would cost to manufacture a flushing apparatus with fittings like Complainants' Exhibit "Trombe" Tank, the fittings being substantially the same as in the Peters and Donald flushing apparatus, of which you have just spoken, so far as the difference in the nature of the two closets admit.

Objected to as incompetent, irrelevant, and immaterial; and it is further objected to on the ground that there is no foundation laid

for the question, it not appearing that the witness has had any experience in the manufacture of "Trombe" tanks like the exhibit referred to.

A. Having carefully itemized all the parts in the Trombe tank and knowing the cost of material contained in it, it figures to $9.50.

Q. 71. Do you mean or do you not mean that you know that $9.50 is what it would cost to make it?

Last objection repeated.

A. Nine dollars and fifty cents.

448 Q. 72. How do you know what the cost of the materials used and of the different parts of such a flushing apparatus and what the cost of putting them together?

Last objection repeated.

A. My reason for knowing is that I have been manufacturing several kinds and grades of tanks and am daily using material of the same kind that is used in the Trombe tank, and knowing the price thereof, that enables me to obtain the price of the Trombe tank at $9.50.

Q. 73. Are you or are you not fully conversant with the cost of labor of constructing such a tank, and have you included in your estimate what the labor of constructing it would cost?

Same objection as above.

A. I have figured in the cost of the labor and I know the cost of the labor.

Q. 74. Is there any water-measuring device shown in complainants' Trombe tank?

A. No, sir.

Q. 75. Is the vacuum chamber in the Peters and Donald patent sued on a water-measuring device, and does it operate to measure the water used, among its other functions?

A. Yes, sir.

Q. 76. Will you please state whether you know what the number of parts is in the flushing apparatus shown and described in the Peters and Donald patent sued on?

Objected to as incompetent and immaterial; and it is further objected to on the ground that the testimony sought to be elic-

449 ited from the witness by this question is secondary, the best evidence being the Peters and Donald patent.

A. Twenty-one.

Q. 77. How many parts are there in the flushing apparatus shown in figure 1 of the Boyle reissued patent sued on, if you know?

Objected to as incompetent, irrelevant, and immaterial and calling for secondary evidence, the patent referred to in the question being the best evidence.

A. Twenty-four.

Q. 78. I now hand you Complainants' Exhibit 1, being the Peters

and Donald patent heretofore referred to, and will ask you whether or not, in your opinion, the specification and drawings of that patent would or would not have suggested prior to 1880 to a mechanic skilled in the art of making suction pumps and thoroughly understanding the closet described in that specification any other form of suction pump which could be substituted in place of the one there shown, and which would do the pumping performed by the aspirator shown in the Peters and Donald patent substantially as it would be performed by that aspirator.

Objected to as incompetent, irrelevant, and immaterial, as vague, as leading; and, furthermore, as calling for an expression of opinion of a matter of law concerning which the witness is incompetent to testify. The question is further objected to as calling for the witness' opinion to contradict the facts as disclosed by this record.

A. In answer would say that in having the Peters and Donald flushing apparatus before me and being familiar with the
450 injector pumping device and understanding the principles or workings of aspirators and knowing that the water passing through the injectors acts as a piston to create the suction or suck the air out of the suction pipe, which must be done before any pumping can take place and which is done in the aspirator of the Peters and Donald flushing apparatus, that the injector principle would be suggested as a pumping device other than that of the Peters and Donald flushing apparatus, for the reason that the water in the flushing chamber of the Peters and Donald tank, as I said before, acts as a piston and sucks the air after it, and in the injector it would perform the same functions of pumping the water or air precisely the same way, only that in the injector it carries the air with the water instead of into a vacuum chamber, as is done in the Peters and Donald aspirator.

Q. 79. State whether or not injectors are known as a form of aspirators.

Objected to as incompetent and immaterial, and further objected to as it does not appear from the testimony of the witness whether or not aspirators and injectors are identical; and, if not identical, what difference there is between them.

A. Yes.

Q. 80. Would it or not, in your opinion, in the year 1880 or before that time have required anything more than mechanical skill of the ordinary character to have substituted an injector in place of the vacuum chamber shown in the Peters and Donald patent sued on in such a manner as to do the pumping performed by the form of aspirator shown in the Peters and Donald patent?

Objected to as leading, as incompetent, irrelevant, and
451 immaterial, as calling for the witness' opinion as to a matter of law, and as an attempt to contradict, by the opinion of the witness as to a mere hypothesis, the facts shown by the record in this case.

A. Any ordinary mechanic would, at a glance, have the suggestion of the injector before him after looking at the Peters and Donald vacuum chamber.

Q. 81. I now call your attention to a tank with an injector beneath it. Will you please state whether or not, if you know, the injector attached to that tank is made like the injector lettered I in figure 6 of the reissued patent 10826, sued on in this case?

Counsel for complainants asks counsel for defendant what his purpose is in referring to the tank referred to in this question.

Counsel for defendant states that he proposes to identify it and offer it in evidence.

Counsel for complainants objects to the question being answered until the tank referred to in the question is marked as an exhibit and offered in evidence, in order that complainants' counsel may specifically object to the same; and counsel for complainants states that on or before the hearing of this cause he will move to strike out any testimony relating to this tank referred to in the question, and also move to have the said tank stricken out as an exhibit in this case on the grounds that the said tank and any testimony regarding the same is totally irrelevant, incompetent, and immaterial to any issue in this case and wholly without foundation.

452 A. I answer yes.

Counsel for defendant here offers the tank, with the injector attached, in evidence in this case, and it is received in evidence, marked "Defendant's Exhibit No. 16."

Counsel for complainants now asks defendant's counsel for what purpose he introduces this tank, Exhibit No. 16, in evidence.

Defendant's counsel declines to answer further than that it constitutes a part of our defense.

Complainants' counsel objects to the introduction in evidence of this tank, Defendant's Exhibit No. 16, as incompetent, irrelevant, and immaterial, and here notifies defendant's counsel that on or before the hearing of this case he will move to have this exhibit taken out of the case and any testimony regarding the same stricken from the record.

Q. 82. I will ask you whether or not, prior to 1880, it would, in your opinion, have required any invention to place an injector below a tank or source of supply, as that injector is placed, and place a valve over the opening leading into the injector from the tank, and attach the air pipe to a space between two traps, such as are shown in the Peters and Donald patent, and the bottom of the injector to a flushing pipe leading to the bowl, so that the water in passing from the tank to the bowl would have sucked up and rarified the air in the space between the two traps, provided the mechanic who did it was acquainted with the state of the art with reference to injectors as it stood at that time, and had had a description and drawing of the Peters and Donald patent before him.

453 Objected to as leading, as asking the opinion of the witness as to a matter of law, and as an attempt to contradict by a

hypothesis the facts disclosed by this record, and as incompetent and immaterial to any issue of this case.

A. In answer to that I would state that it required no invention for any mechanic knowing the principle of an injector to place it under a tank, and being supplied with the water to act as a pump for pumping air or water by the water falling through it, and, having the Peters and Donald tank before him, I consider it no invention to be applied as a pump.

Q. 83. Would it at that time have required any experiment on the part of a mechanic who understood injectors and who had before him the Peters and Donald patent to have enabled him to have substituted an injector for the form of aspirator shown in the Peters and Donald patent in such a way that it would have done the same work, so far as pumping is concerned?

Objected to as leading, as incompetent and immaterial, as calling for the opinion of the witness as to a question of law, as asking the witness to contradict by a mere hypothetical case put to him the facts disclosed by this record, and it is further objected to on the ground that it does not appear that this witness is qualified to pass upon questions of what constitutes mechanical skill and what constitutes a patentable invention.

A. It requires no experiment.

Q. 84. Then, as I understand you, you agree with Mr. Frazer, complainants' solicitor and expert, that the use of an injector beneath the reservoir tank in place of a vacuum chamber, such
454 as is shown in the Peters and Donald patent, is the mere substitution of one well-known form of air pump in place of another well-known form of air pump?

Complainants' counsel objects to the form of question: First, because it is stated in the question that Mr. Fraser is complainants' solicitor, which is not the case, as the record shows Mr. Fraser, who is referred to, not being a lawyer, but merely one of a firm of patent solicitors, who solicited the Peters and Donald patent and the Boyle patent, referred to in the record; second, the conclusions suggested in the question as to what Mr. Fraser has stated in testifying as complainants' expert are not warranted by the record.

A. I answer yes; I agree with Mr. Fraser.

Defendant's counsel here explains that he did not mean Mr. Fraser was solicitor of record in this case, but simply that he had acted as the complainants' solicitor of patents.

Q. 85. I now hand you an injector like the one attached to "Complainants' Exhibit Defendant's Tank" (handing same to witness), and will ask you to examine it, and also to examine the one attached to the tank and state whether or not the aspirator I hand you is the same as the other, and, if there are any differences, please state what they are.

A. It is just the same as the other valve in the tank except the

screw, which regulates the thimble, does not screw through the air pipe at the top.

The aspirator just handed the witness is here offered in evidence and marked "Defendant's Exhibit No. 17."

455 Q. 86. Your attention is now called to the injector shown in figures 1, 4, and 5 of the Boyle reissued sued on, which you will please examine, and your attention is also called to the flushing apparatus shown in the Peters and Donald patent sued on, and especially the sealed chamber design- to suck the air from the air space between the two traps in the soil passage of the bowl, and your attention is also called to the aspirator marked "Defendant's Exhibit No. 17," and you will please state whether, in your opinion, the difference in the construction of Defendant's Exhibit No. 17 from that of the injector shown in figures 1, 4, and 5 of the Boyle reissue sued upon is as great or greater than the difference in the construction of injector shown in said figures of said reissue, and that of the sealed chamber shown in the Peters and Donald patent sued upon.

Objected to as leading and incompetent, irrelevant and immaterial.

A. In my opinion the Boyle injector referred to in figures 4 and 5 will do the work of pumping and the cleansing of the bowl sufficiently well, but not as well at any time will it perform the functions of the Peters and Donald aspirator or flushing device, because, first, it had no measuring device, and, secondly, it at all times permits the foul gases which arise between the two traps free access into the room, which is a very serious objection in the use of pneumatic water-closets. Defendant's Exhibit No. 17 is also an aspirator or injector, which will perform all the work of pumping out the air and water from the bowl of a water-closet, is a better form of an injector or aspirator than that of the Boyle reissue shown in figures 4 and 5, because of its not being so easily stopped up by impediments being sucked through the air pipe while in use, and also do not perform all the functions of the Peters and Donald flush-
456 ing apparatus or aspirator, because of there being an access at all times, except while in use or in the act of syphoning the bowl, of permitting the foul gases which arise between the traps in the soil passage to escape into the room freely; also that it has no measuring device.

Q. 87. Do you regard, then, the Peters and Donald vacuum chamber as the best form of an aspirator for the purpose of removing the foul air between the traps of the soil passage, and thus creating a vacuum between those traps and the syphoning of the water and excrement out of the bowl?

Objected to as leading and immaterial.

A. I do.

Q. 88. Now, please state whether the vacuum chamber in the Peters and Donald patent, the injector shown in the Boyle reissue,

and Defendant's Exhibit No. 17 are all simply different forms of air pumps performing the functions of sucking the air from the space between the traps in the soil passage leading from the bowl.

Objected to as incompetent and immaterial and as leading.

A. Yes, sir; I do, for the reason that all injectors similar to those spoken of are worked by the aspirator principle.

Q. 89. Now, please state whether, in your opinion, any mechanic skilled in the art of making water-closets, as the art stood in 1880, on seeing a water-closet constructed according to the Peters and Donald patent sued on, would readily have known without ever seeing or have heard of the Boyle patent or a water-closet constructed as shown in the Boyle patent that injectors such as shown in the figures of the Boyle patent and such as Defendant's Exhibit No. 17

457 could be readily applied to a flushing apparatus to suck the air from the confined space between the two traps of the soil passage of the bowl and that without invention on his part.

Objected to as incompetent, irrelevant, and immaterial, as leading, as calling for the opinion of the witness on a mere hypothesis to contradict the facts appearing in the record in this case, and for the reason that the question calls for the opinion of the witness as to a question of law; and it is further objected to on the grounds that it does not appear by the testimony of the witness that he is competent or qualified to pass upon the question of what does or does not constitute mechanical skill or patentable invention in a given case.

Counsel for defendant says the question calls for nothing from the witness which is contradicted by the record; that the witness has shown himself skilled in the art of water-closets and is entirely competent to state his opinion as an expert as to whether, in 1880, and long before it is contended that Boyle made any alleged invention, a mechanic seeing an aspirator, such as applied in the Peters and Donald patent sued on, to exhaust the air from the space in the soil passage between the two traps would readily know and see that other forms of air pumps or aspirators might be variously applied to perform that function and that without any invention,

but with the use of ordinary skill, and it is for witnesses
458 skilled in the art and practical workmen like Mr. White that such a fact as this should be manifested to the court.

A. A mechanic having the Peters and Donald flushing apparatus before him and understanding its workings prior to 1880, it will at once suggest to him a well-known pumping device, that of an injector similar to that now used in the Boyle reissue for pumping air and water out of a bowl or water-closet in the same way as is pumped by the aspirator in the Peters and Donald flushing apparatus. It is simply working a well-known pumping device in a similar manner and to perform the same work as is performed by the aspirator of the Peters and Donald tank by the action of the water falling through them.

Defendant now offers in evidence as parts of Exhibit No. 14, heretofore offered, lead pipe marked "Defendant's Exhibit 14 A," lead pipe marked "Defendant's Exhibit 14 B," lead pipe marked "Defendant's Exhibit 14 C," trap marked "Defendant's Exhibit 14 D," and bowl marked "Defendant's Exhibit 14 E," which parts when put together constitute a construction such as is shown and described in the Peters & Donald patent. It is agreed by counsel of the parties hereto that the trap marked "14 D," though not the one used in water-closet marked "Defendant's Exhibit No. 14," is exactly similar to it and may be used with the same effect as if the old trap had been cut loose from its fastenings and produced as part of the exhibit.

Thereupon, by consent of all the parties hereto, the further taking of this deposition was continued until Friday, the 8th day of June, at nine o'clock a. m., at the same place.

459

GEORGE M. BLOCK,
[SEAL.] *Special Examiner and Notary Public.*

Pursuant to adjournment, at nine o'clock a. m., Friday, June 8, 1888, the same parties appearing — before, the taking of this deposition was continued as follows:

(It is stipulated by and between counsel for complainants and counsel for defendant in this cause that the one hundred pounds stamp duty on British patent of Peters and Donald, 1207 of the year 1874, and dated 7th of April, 1874, which duty was due on the 7th of April, 1881, was not in fact paid on or before the 7th day of April, 1881, and that that tax has never been paid.)

Counsel for defendant here produces and offers in evidence Knight's American Mechanical Dictionary, by Edward H. Knight, published A. D. 1877 by Heard & Houghton, at New York, vol. 1, art. Aspirator, pages 169 and 170, a copy of which *are* to be attached by stipulation as Exhibit 18 and have the same effect as if the original book was put in evidence; also defendant offers in evidence pages 476, 477, 478, and 480 of Eubank's Hydraulics and Mechanics, by Thomas Eubank, 14th edition, published in 1856 by J. C. Derby, at New York, N. Y., a copy of which will be marked Defendant's Exhibit 18½; also Chambers' Encyclopædia, published at Philadelphia by J. P. Lippencott & Co., A. D. 1868, vol. 8, article "Pumps;" section 5, subheading "The Jet Pump," and particularly pages 11 and 12 of said publication, a copy of which is to be agreed upon by stipulation and marked "Exhibit 19;" also defendant offers in evidence pages 259 and 260 of Ure's Dictionary of Arts, Manufactures, and Mines, edited by Robert Hunt, assisted by F. W. Rudler, and printed in London, England, and published in the United States by Messrs. Longmans, Reed & Co., 1875, vol. 1, 7th edition, article "Aspirator," a true copy of which pages is to be annexed by stipulation as Exhibit No. 20.

460

It is mutually understood and agreed that these publications were severally made of the dates stated in the offer and by the persons therein named respectively and at the places therein named;

also that said copies shall be received in evidence with the same force and effect as if the originals were produced, but subject to the same objections as to relevancy, competency, as if the originals themselves had been produced.

Counsel for complainants asks defendant's counsel for what purpose he introduces the extracts from the publications named in the above offer.

Counsel for defendant states that they are offered in evidence, first, as showing a lack of novelty in the alleged improvement described and claimed in the reissued patent sued on, and especially in that part described and claimed by claims 1 and 2 thereof; second,

461 to show the state of the art as to injector pumps prior to the alleged production by Mr. Boyle of the alleged improvement described and claimed in the issued patent sued on in this case, to show in connection with other evidence in the case as well as by themselves that there was no invention in making the combination described and claimed in said reissued patent, and especially that part described and claimed in claims 1 and 2 thereof, at the time of the alleged production by Mr. Boyle of the alleged improvements therein claimed.

Complainants' counsel objects to the introduction of the said extracts of publication named in the offer as irrelevant and immaterial, since they do not show lack of novelty in the inventions claimed by the claims of the patents in controversy and because the state of the art relating to aspirators and injectors as devices simply for purpose of pumping or sucking air, or any other fluid or matter, is not relevant or material to any issue in this case.

Continuation of testimony of PETER WHITE:

Q. 90. You will please examine the different figures shown in the patent sued on, especially with reference to the pipe *f*, in each case leading either from a bell or from the top of the flushing chamber F, and state whether or not that pipe would perform the same functions in an apparatus constructed like figure 6 that it performs in flushing apparatuses constructed according to figures 1 or 4.

Objected to as leading and incompetent, irrelevant, and immaterial.

A. Yes.

462 Q. 91. Do you know what it would cost to construct a flushing apparatus like that shown in figure 4 of the Boyle reissue patent of the same relative dimensions as Complainants' Exhibit "Trombe" Tank, and do you know whether it would cost more or less than a flushing apparatus constructed in accordance with figure 1?

Objected to as incompetent and immaterial.

A. Number 4 will cost more.

Q. 92. State, if you know, whether a flushing apparatus of the same dimensions, constructed in accordance with the figure 5 of the

Boyle reissued patent, would cost more or less than the flushing apparatus shown in the figure 1 of that patent.

Objected to as incompetent and immaterial.

A. It would cost more.

Q. 93. State, if you know, what a flushing apparatus constructed in accordance with figure 6 of the Boyle reissued patent and having a bleeder pipe attached thereto for supplying an after-wash, or water for filling the bowl, and a float-valve for admitting water to the tank and the bleeder pipe would cost to manufacture.

Objected to as incompetent, irrelevant, and immaterial, and it is furthermore objected to on the ground that no foundation is laid for the question.

A. Eight dollars and thirty-one cents.

Defendant's counsel here offers in evidence a tank constructed in accordance with figure 6, which is received in evidence and marked "Defendant's Exhibit No. 21."

463 Complainants' counsel objects to the introduction of the said exhibit on the ground that it is incompetent, irrelevant, and immaterial and that no foundation is laid for the same.

Q. 94. Mr. White, please examine Exhibit No. 21 and state whether or not it is constructed in accordance with figure 6 of the Boyle reissued patent sued on.

Objected to as immaterial, the exhibit and the patent being the best evidence.

A. Yes.

Q. 95. You have stated that the Peters and Donald flushing apparatus worked well at all the different heights at which you have tried it. In your answer did or did you not mean that the emptying of the bowl was performed in the same way at the different heights?

Objected to as leading and incompetent, irrelevant, and immaterial.

A. Yes.

Q. 96. Was or was not the water in either instance drawn from the bowl before the water in the flushing pipe could get down to the bowl and the trap unsealed?

Objected to as leading, incompetent, irrelevant, and immaterial, and complainants' counsel requests that defendant's counsel cease to suggest by his questions to the witness the answer desired.

A. No.

Q. 97. I now hand you an article which you will please examine, and state whether or not you know what it is (handing same to witness); and, if you do, state what it is.

464 Complainants' counsel objects to the question or to any testimony relating to the article referred to in the question as incompetent, irrelevant, and immaterial.

A. Yes; it is an aspirator.

Q. 98. I now call your attention to figure 95, page 259, of volume 1, Ure's Dictionary of Arts, Manufactures, and Mines, and ask you whether or not the aspirator you have in your hand is constructed according to that figure and the description of it, so far as the injector part, strictly speaking, is concerned.

Objected to as leading and incompetent, irrelevant, and immaterial.

A. Yes.

The aspirator or injector here referred to is here offered in evidence and marked "Defendant's Exhibit No. 22."

Q. 99. Do you know whether an aspirator constructed like Exhibit No. 22 would, if placed below a source of water supply and attached by its lower end to a flushing pipe of a water-closet connected to a bowl having two traps in the passage leading therefrom and an air space between those traps, and the short arm of the aspirator, lettered C in the drawing, figure 95, were attached to an air pipe leading to the air space between the two traps, and water were allowed to flow down from the source of water supply through the injector and flushing pipe into the bowl, the aspirator would perform the same function that is performed in practice by the vacuum chamber in the Peters & Donald patent when in action?

Objected to as leading and incompetent, irrelevant, and immaterial, and as suggesting to the witness an hypothesis wholly imaginary and which it is shown by the record had no
465 foundation in fact prior to the inventions of the Peters and Donald patent or the Boyle reissued patent sued upon.

A. Yes.

Q. 100. State what actual experience you have had in the use of such an injector or in testing it.

Last objection repeated.

A. I have applied it to a tank having a supply valve from the tank to the injector, which regulates the supply to the injector, and have used it with the water-closet bowl, and it performed the same pumping suction when the water from the tank was permitted to pass down through it, the same as is performed in the Peters and Donald flushing apparatus.

Q. 101. I will now call your attention to figure 9 on page 12 of Chambers' Encyclopædia, heretofore referred to, and will ask you whether or not you understand the operation of the pump described on pages 11 and 12 of that publication, under the head of "jet pump," and ask you whether or not you understand that description and the pump illustrated by figure 9.

Objected to as incompetent, irrelevant, and immaterial.

A. Yes.

Q. 102. State how it operates.

Same objection repeated.

A. By the falling water passing through it from the tank B.

Q. 103. Please compare that figure with figure 6 of the reissued patent sued on and state what resemblance, if any, there is between the injector shown in figure 9, shown in the encyclopædia, and injector 1 shown in figure 6 of the reissued patent sued upon.

466 Objected to for the same reasons made to the introduction of the exhibit referred to, Defendant's Exhibit 19, and as incompetent, irrelevant, and immaterial, and it is further objected to on the ground that the question calls for secondary evidence, for, if the said Exhibit 19 is competent, relevant, or material to any issue in this case, it speaks for itself, and it and the figure referred to of the Boyle reissued patent and the Boyle reissue patent itself are the best evidence of what these exhibits show, and their comparison is a matter for the court to pass upon if that comparison is relevant, and not a matter for the witness.

A. It is the same thing. It performs the pumping in the same way by the water falling through it.

Q. 104. Referring to figure 1 of the reissued patent sued on, I will ask you what the result is where only enough water is allowed to pass from the tank E into the flushing chamber F to start the pumping, and the pumping in consequence ceases immediately after being started.

Objected to as immaterial and as assuming a condition in the operation of the flushing apparatus of the Boyle reissued patent not proven to exist in practice.

A. The contents of the bowl will be partly syphoned into the trap D and remain there because of the vacuum being broken in the flushing chamber F.

Q. 105. State what liability there is, if you know, of that happening in actual practice on a closet constructed in accordance with figure 1 of the Boyle reissue sued on.

467 Objected to as incompetent and immaterial.

A. If the user should not hold the valve *h* in tank E open sufficiently long there will be no syphon action, or if it simply raised the valve and allowed to drop when the water would enter the bowl through the flushing chamber it is liable to happen, there being no measuring device to insure syphonage.

Q. 106. What closet is the most certain to operate with practice, one constructed in accordance with figure 1 of the Boyle reissued patent or one constructed in accordance with the Peters and Donald patent sued on, in ordinary practice?

Objected to as leading and as immaterial.

A. The Peters and Donald.

Q. 107. In which of the closets is the action more instantaneous, one constructed in accordance with the Peters and Donald patent or one constructed with an injector in lieu of the pumping apparatus, as shown in the Peters and Donald patent?

Objected to as vague, incompetent, irrelevant, and immaterial.

A. In the Peters and Donald.

Thereupon, by consent of all the parties, the further taking of this deposition was continued until two o'clock p. m. on the same day.

GEORGE M. BLOCK,
Special Examiner and Notary Public.

Pursuant to adjournment, at two o'clock p. m., Friday, June 8th, 1888, the same parties appearing as before, the taking of this deposition was continued as follows:

Continuation of examination of PETER WHITE:

468 Q. 108. If you know, will you please state what a mechanical equivalent is?

A. A mechanical equivalent is a piece of mechanism which will do the same work substantially in the same way.

Q. 109. I call your attention to Defendant's Exhibit No. 14 which is a flushing apparatus with a sealed chamber, constructed, as you have said, in accordance with the Peters and Donald patent sued on, and I also call your attention to Complainants' Exhibit Trombe Tank, and will ask you to state whether, in your opinion, the injector used with the latter to pump the air from the space in the soil pipe between the two traps is or is not the mechanical equivalent of the sealed chamber of Defendant's Exhibit No. 14 used to accomplish the same purpose.

Objected to as leading, as incompetent, irrelevant, and immaterial and as asking the witness to determine a question of law.

A. I answer yes; the injector is one form of an aspirator, and is a mechanical equivalent of the Peters and Donald flushing apparatus.

Cross-examination by PAUL BAKEWELL, Esq., solicitor for complainants:

X Q. 1. You are now in the employment of The N. O. Nelson Manufacturing Company, defendant in this action, are you not, Mr. White?

A. Yes, sir.

X Q. 2. How long have you been in the employment of the defendant?

A. Seven years last February.

X Q. 3. You have been in the employment of defendant company continuously for more than seven years last past, have you not?

469 A. Yes, sir.

X Q. 4. Are you a stockholder in The N. O. Nelson Manufacturing Company, defendant in this action?

A. No, sir.

X Q. 5. Are you under a salary paid you by that company?

A. Yes, sir.

X Q. 6. Besides your salary are you pecuniarily interested in the profits made by that company?

A. No, sir.

X Q. 7. Is it not a fact that the employees of the N. O. Nelson Manufacturing Company are interested in the profits made by that company?

A. Yes, sir.

X Q. 8. In what sense are they interested in the profits?

A. If I understand the word correctly, they are interested in the profits that are made, but I am the only one who is not.

X Q. 9. You stated in your direct examination, I believe, that you are familiar with the Peters and Donald patent, Complainants' Exhibit No. 1. Is that a fact?

A. Yes, sir.

X Q. 10. How long have you been acquainted with this Peters and Donald patent?

A. Practically since the middle of last February.

X Q. 11. What do you mean by practically?

A. It being in practical use in the shop of the N. O. Nelson Manufacturing Company, which I have charge of, and being daily used since that time.

X Q. 12. You do not seem to distinguish between a machine constructed under the patent named and the grant itself. What I want to know is, when you were first acquainted with the patent, specification, and drawings of the said Peters and Donald patent.

470

A. To the best of my knowledge I first seen this drawing of the Peters and Donald patent about eight years ago.

X Q. 13. You never saw the patent referred to before that time?

A. No, sir.

X Q. 14. Did you ever hear of it before then?

A. Yes, sir.

X Q. 15. When and under what circumstances?

A. I applied for a patent some time previous to that—I couldn't state exactly when—and my solicitor informed me of the existence of this patent.

X Q. 16. For what kind of an invention were you applying for a patent?

A. A pneumatic water-closet.

X Q. 17. Was the said Peters and Donald patent referred to by the Patent Office during your application for a patent which you have just referred to?

A. I don't know exactly. My solicitor at the time mentioned the fact to me. I hadn't seen anything with reference to it.

X Q. 18. At or about that time did not you see the small drawing and claims of the said Peters and Donald patent, as published in the Patent Office Gazette?

A. No, sir.

X Q. 19. Was a patent granted to you by the United States Government on the application to which you have just referred?

A. Yes, sir.

X Q. 20. Is the copy of the patent which I now hand you
471 a copy of the specifications and drawings and claims of the patent granted to you on said application (handing same to witness)?

A. No, sir.

X Q. 21. What patent was it?

A. It was a pneumatic water-closet that acted in its operation while the user rested upon the seat. The weight of the user on said seat caused a supply valve to be opened to the tank, admitting the pressure into the tank until it was filled to the required height, when it was closed off by an automatic float-valve in said tank, and when the user of the closet rose from the seat the pressure from the tank forced by the pressure of an air chamber in said tank, together with the natural fall of the water from the tank. I would state that there was an air pipe connected beneath said tank to the flushing pipe, and which air pipe had a projection pointing downwardly in the flushing pipe, at the end of which there was a small valve which closed the outlet to the air pipe by the pressure passing through the flushing pipe into the tank while the user rested upon the seat. When the seat was released the pressure flowed back through the same flushing pipe through which it entered the tank down into the closet, pulling open the small valve on the inside of the flushing chamber, or rather the outlet to the air pipe into the flushing pipe, which produced an air suction from the space between the traps in the soil passage, producing a perfect syphoning of the bowl.

X Q. 22. What is the date of that patent, Mr. White, as nearly as you can remember?

A. I really couldn't say. To the best of my knowledge I think about two years and a half old.

X Q. 23. You have stated that in connection with your application or pending your application for the patent referred to in your last answer you were notified by your solicitor of patents of
472 the existence of the Peters and Donald patent sued upon in this case; please state, as nearly as you can remember, when you were first apprised of the existence of this Peters and Donald patent.

A. At the time my application was pending for the closet just referred to, and in speaking about the claims of said patent to my solicitor he simply suggested to me, as near as I can recollect, the existence of the Peters and Donald patent.

X Q. 24. About what year was that?

A. To the best of my knowledge I think somewhere between 1885 and 1886.

X Q. 25. I believe you stated in your direct examination that you are acquainted with the Boyle reissued patent in suit, Complainants' Exhibit No. 2. Is that a fact?

Ans. Yes, sir.

X Q. 26. You are aware, are you not, that this is the reissue of original letters patent granted to James E. Boyle January 1, 1884, being complainants' exhibit?

Ans. Yes, sir.

X Q. 27. When did you first know that this patent of January 1, 1884, Complainants' Exhibit 7, had been granted to James E. Boyle?

A. Somewhere, as near as I can recollect, in June, or about there, 1887.

X Q. 28. How did you become acquainted with this fact?

A. I was constructing a tank for the supply of a pneumatic water-closet, and had wrote for several copies to see what they was in the market; among them I received a copy of the Boyle patent referred to.

473 Last question and answer objected to as irrelevant and immaterial to any issue in this case.

X Q. 29. You are sure that you did not have notice of this Boyle patent before that time, are you?

A. No, sir; I had no notice of it prior to that time, that I know of.

X Q. 30. Is it not a fact that the N. O. Nelson Manufacturing Company made and sold, prior to the month of October, 1887, flushing apparatuses and bowls like the exhibits Complainants' Exhibit "Defendant's Tank" and Complainants' Exhibit "Defendant's Bowl"?

Objected to as assuming a fact and incompetent.

A. Yes, sir.

X Q. 31. In your relation to the N. O. Nelson Manufacturing Company, has it not been within your peculiar province to oversee the manufacture of flushing apparatuses and bowls like Complainants' Exhibit "Defendant's Tank" and Complainants' Exhibit "Defendant's Bowl"?

A. I would state in answer to that, the flushing apparatuses were manufactured under my supervision, but not the bowls.

X Q. 32. But you know that bowls like Complainants' Exhibit "Defendant's Bowl" had been made for the N. O. Nelson Manufacturing Company to be used with apparatuses like Complainants' Exhibit "Defendant's Tank," do you not?

A. To the best of my opinion it was.

X Q. 33. From your knowledge and experience in the manufacture of apparatuses like Complainants' Exhibit "Defendant's Tank" and of the uses to which they are put in practice, please
474 state what besides said Complainants' Exhibit "Defendant's Tank" and Complainants' Exhibit "Defendant's Bowl" are used in practice to make these parts operative for the purposes for which they are intended to be used.

A. I wish Mr. Bakewell to understand that I am not an expert, only being a mechanic, having a practical knowledge of the exhibits here before me, and would be exceedingly glad if he would make his questions as simple as possible.

Mr. BAKEWELL: I now point to you the two exhibits referred to in my last question, and I will ask you to state what other parts are necessary to be added to these two exhibits to make them operative for the purposes for which they were made.

Objected to as not legitimate cross-examination; indeed, as having no bearing on the direct examination of the witness whatsoever and as incompetent.

A. A trap, a flushing pipe, an air or vacuum pipe, a supply pipe to the cistern.

X Q. 34. Do not the parts which you have just named correspond to Defendant's Exhibit "14 A," "14 B," "14 C," and "14 D"?

Objected to for the same reasons last above.

A. Yes, sir.

X Q. 35. Where is the trap referred to in your last two answers placed with relation to the bowl when the devices are put up for use?

Objected to as last above.

A. Underneath the bowl.

X Q. 36. Please look at Complainants' Exhibit 11 and state whether or not you know what it is (handing same to witness).

475 A. Yes, sir.

X Q. 37. What is it?

A. This is part of the defendant's catalogue.

X Q. 38. Have you ever before seen the catalogue of the N. O. Nelson Manufacturing Company, of which this exhibit is a part?

A. Yes, sir.

X Q. 39. Please examine pages 6 and 7 of this Complainants' Exhibit 11 and state whether or not the directions contained on page 7 state the proper means of arranging and setting up for use a water-closet having a tank and appurtenances like Complainants' Exhibit "Defendant's Tank" and Complainants' Exhibit "Defendant's Bowl."

A. Yes.

X Q. 40. On page 6 of this Complainants' Exhibit 11 I find a cut of a water-closet with the word "Syphonia" on the tank, and beneath this the words "P. White's patent, 1887." Is this Syphonia closet made and sold by the N. O. Nelson Manufacturing Company made under a patent granted to you?

Counsel for defendant objects to the question as irrelevant, incompetent, and immaterial to any issue in this case.

A. I have no patent on this closet except the flushing apparatus or tank, which the N. O. Nelson Company manufactures under said patent.

X Q. 41. Your patent then relates solely to the flushing apparatus of this "Syphonia" closet, made by the N. O. Nelson Manufacturing Company, does it?

A. So far as the combination of the tank and the retarded value is concerned.

X Q. 42. Is this the patent or a copy of the specifications

476 and drawings of the patent granted to you and under which the tank of the Syphonia closet is made?

Complainants' counsel here hands to witness printed copy of the

specification, drawings, and claims of letters patent of the United States granted to Peter White May 24, 1887, No. 363,566.

Objected to as not cross-examination, not germain to the direct examination, and irrelevant and incompetent.

A. Yes, sir.

Complainants' solicitor offers in evidence the patent referred to in the last question and answer, and the same is marked "Complainants' Exhibit No. 18."

Counsel for defendant objects to the admission of said exhibit in evidence because it is not legitimate cross-examination, and because it is irrelevant, incompetent, and immaterial as evidence in this case, and because its only effect can be to distract and draw attention from what is vital as a defense in this case.

X Q. 43. Is not Complainants' Exhibit "Defendant's Tank" made under the said patent granted to you on the 24th day of May, 1887, just referred to?

A. Yes, sir.

X Q. 44. Who owns this patent now?

A. I do.

X Q. 45. Does the N. O. Nelson Manufacturing Company pay you any royalty for manufacturing under this patent?

477 Counsel for defendant objects to the question as irrelevant, incompetent, and immaterial.

A. Yes, sir.

X Q. 46. Do you get a royalty from the N. O. Nelson Manufacturing Company on each tank sold by that company and made under your said patent?

Objected to as irrelevant, incompetent, and immaterial.

A. Yes, sir.

X Q. 47. How long has the N. O. Nelson Manufacturing Company been engaged in making water-closets or parts thereof like Complainants' Exhibit "Defendant's Tank"?

A. Since April or May, to the best of my knowledge, 1887.

X Q. 48. About how many has the N. O. Nelson Manufacturing Company made?

Objected to as irrelevant and immaterial to any issue here involved.

A. I don't know.

X Q. 49. You have stated that it is your business to oversee or supervise the manufacture of apparatuses like Complainants' Exhibit "Defendant's Tank," have you not?

A. Yes, sir.

X Q. 50. I do not ask the exact number made by the defendant, but I do ask you to state to the court about how many apparatuses substantially like Complainants' Exhibit "Defendant's Tank," and

made under your letters patent of May 24, 1887, have been made by the N. O. Nelson Manufacturing Company.

Objected to as not legitimate cross-examination and as irrelevant, immaterial, and calling for a mere guess of the witness, which is utterly incompetent.

478 A. I don't know, having not figured up the amount.

X Q. 51. You have stated that you receive a royalty upon each flushing apparatus made under your patent of May 24, 1887, have you not?

A. Yes, sir.

X Q. 52. When were these royalties paid to you?

Objected to as impertinent, as a matter which is none of the complainants' business, and as incompetent, and as not being cross-examination, as multiplying the issues, as prying into private affairs, and does not concern this case.

A. I received my royalties on all the goods on which I receive the royalty upon from the N. O. Nelson Manufacturing Company in the latter part of each month following the month in which they are manufactured.

X Q. 53. Can you state approximately about what number of flushing apparatuses made under your letters patent of May 24, 1887, and similar to Complainants' Exhibit "Defendant's Tank," you have received royalties upon from the N. O. Nelson Manufacturing Company?

Objected to as not cross-examination, as irrelevant and immaterial; and, further, on the ground that the witness has distinctly stated that he does not know; and, further, because the complainants are not entitled to any royalties under Mr. White's patent in any event, whether the defendant has paid them to White or not.

A. I cannot.

479 X Q. 54. Has the N. O. Nelson Manufacturing Company made as many as fifty tanks like Complainants' Exhibit "Defendant's Tank"?

Objected to for reasons above.

A. I don't know.

X Q. 55. You supervise the manufacture of these, do you not?

A. Yes, sir.

X Q. 56. And do you mean to tell the court that you do not know whether or not The N. O. Nelson Manufacturing Company, defendant, has made as many as fifty tanks or apparatuses like Complainants' Exhibit "Defendant's Tank"?

Objected to as having been already answered, and all of this testimony is before the court.

A. I do not, for the reason that the N. O. Nelson Manufacturing Company manufactures a number of tanks in which I hold patents, the royalties being the same as the exhibit tank referred to, and are

figured up at the end of each month by the book-keeper of the N. O. Nelson Manufacturing Company as a whole, and in consequence I cannot say how many of any particular kinds of flushing apparatuses are manufactured under my supervision, not having figured them.

Q. 55. All the apparatuses made by the N. O. Nelson Manufacturing Company and provided with an injector like Complainants' Exhibit "Defendant's Tank" are marked and sold by the N. O. Nelson Manufacturing Company with and under the name of "Syphonia," are they not?

Objected to by counsel for the defendant as irrelevant, incompetent, and immaterial, as not growing out of the direct examination, and not being the best evidence. The kinds of water-closets
480 or flushing apparatuses, or examples of the kind, would be the best evidence of how they are branded, if at all.

A. Yes, sir; of late they are.

Q. 56. It is easy for you to distinguish the difference between an apparatus like that shown in Complainants' Exhibit "Defendant's Tank," made under your patent of May 24, 1887, and any other tank for water-closets made by the Nelson Manufacturing Company, is it not?

Objected to as not cross-examination, as making the witness the complainants' own witness, and as leading, irrelevant, and incompetent. We are not trying a case for the infringement of Mr. White's patent, nor as to how many flushing apparatuses were constructed in keeping with his valve covered by the specification of Complainants' Exhibit No. 18, being the P. White patent No. 365,566, and I now desire to ask counsel for complainants on what possible theory he claims that this question calls for relevant testimony.

Counsel for complainants answers that in reply to a series of leading questions this willing witness has not only testified to his relation to defendant company, but has also expressed a greater familiarity with the manufacture of water-closets and their appurtenances than any one in St. Louis, and has undertaken to show that the inventions sued upon are without merit and devoid of patentable invention. This line of cross-examination has already developed the fact that the witness has a reason for his attacks
481 upon the complainants' patents in suit, in that the apparatuses or essential parts of the apparatuses which complainants contend defendant makes and sells in infringement of complainants' rights are made under letters patent granted to this willing witness, and that this witness receives a royalty upon an essential part of every water-closet which defendant will be enjoined from making should this court grant complainant the decree prayed for. After stating the fact that he supervises the manufacture of all the apparatuses like Complainants' Exhibit "Defendant's Tank" which are made by the N. O. Nelson Manufacturing Company under his patent of May 24, 1887, the witness declines to state, even approximately, how many of such apparatuses have been made by the defendant.

The question propounded to the witness and many of the questions to be propounded to the witness are now put to him for the purpose of testing his veracity, his interest in the matters involved in this case having been clearly developed.

Counsel for the defendant says that counsel for the complainant has taken an unfair advantage of the reasonable request made when asked to state on what theory he claims that this question calls for relevant testimony, and, without any pretext or justification whatever, as shown by the record, has denounced the witness as a willing witness and as not willing to state facts within his knowl-
482 edge when the direct reverse is absolutely true. This witness is not a professional expert, as was the witness examined for the complainant-, but a practical mechanic thoroughly conversant with the construction of water-closets and all that appertains thereto, and whatever he has said showing or tending to show that there was no invention in the Boyle reissued patent sued on, he has given overwhelming reasons and proofs sustaining his opinion by exhibiting drawings in publications which have been known to the public for scores of years before Boyle's alleged invention, and by showing that the application of the injector by Boyle was simply the application of a well-known mechanical equivalent to do the same work in substantially the same way which the sealed chamber did the like work in the Peters and Donald patent; and it seems like counsel, because of the cogent reasons stated by Mr. White and his sincerity and candor and intelligence, is displeased with him, and that without valid cause.

Counsel for complainant states that he declines to argue the merits of this case upon the record, but that he merely answered the query asking for the theory of his examination and, declining to continue this fruitless discussion, requests the witness to answer his last question.

A. That depends upon circumstances and how those tanks appear before me at the same time, as numerous other tanks having the principal parts which contain my patent and are, in fact,
483 similar. The only way that I could readily tell one from the other would be if that portion of the tank or tanks in which the valve projects were facing toward me, then I could tell which was the Syphonia.

Q. 57. Is it not a fact that every tank or flushing apparatus like the exhibit Complainants' Exhibit "Defendant's Tank" and made under your patent of May 24, 1887, is provided with an injector like Defendant's Exhibit "No. 17"?

A. No.

Q. 58. Is not such an injector a necessary part of the flushing of the "Syphonia" closet as made by the Nelson Manufacturing Company?

A. Yes, sir.

Q. 59. Then what do you mean by your answer to my last question but one?

A. It being differently constructed and performing the same work, but in a better way—in a better method.

Q. 60. In what respect does it differ from the injector attached to Complainants' Exhibit "Defendant's Tank"?

A. In the mode of protecting the vacuum pipe or suction pipe through which the air is sucked by the fall of the water through it from the air space between the traps from deposit being sucked up in said pipe while in use.

X Q. 61. Did you not state in your direct examination that Defendant's Exhibit No. 17 is substantially similar to the injector attached to Complainants' Exhibit "Defendant's Tank"?

A. It is the same exactly.

X Q. 62. Is or is not Defendant's Exhibit No. 17 an injector like the injector attached to Complainants' Exhibit "Defendant's Tank"?

484 A. Yes, sir; it's just the same with one exception, that the screw which regulates the bell does not screw through at the top.

X Q. 63. Is not every flushing apparatus made by the Nelson Manufacturing Company under your patent of May 24, 1887, provided with an injector like Defendant's Exhibit No. 17?

Objected to as irrelevant and immaterial and as not cross-examining the witness.

A. Yes, sir.

X Q. 64. Are any other flushing apparatuses made by the Nelson Manufacturing Company provided with injectors like Defendant's Exhibit No. 17?

Objected to as irrelevant, incompetent, and not cross-examining the witness.

A. No, sir.

X Q. 65. Then only flushing apparatuses made by the Nelson Manufacturing Company, which are like Complainants' Exhibit "Defendant's Tank" and which are made under your patent of May 24, 1887, are provided with injectors like Defendant's Exhibit No. 17. Is that not true?

Objected to as above.

A. Yes, sir.

X Q. 66. Injectors like Defendant's Exhibit No. 17 are made by the Nelson Manufacturing Company under your direction, are they not?

A. Yes, sir.

X Q. 67. Please tell the court, not exactly, but as nearly as you can, how many injectors like Defendant's Exhibit No. 17 have been made by The Nelson Manufacturing Company, defendant.

Objected to as irrelevant, incompetent, and immaterial to the issues in this case.

485 A. I don't know. I have not figured out how many I have made.

X Q. 68. Have you made ten?

A. I couldn't say positively what I have made.

X Q. 69. Have you made any?

A. Yes, sir.

X Q. 80. Are you sure that you have not made ten?

Objected to as not cross-examination, as leading, irrelevant, and immaterial.

A. I don't know.

X Q. 71. These injectors, as you have stated, are made to be used as a part of a device for which you obtain a royalty under your patent of May 24, 1887. You have also stated that you supervise the manufacture of "Syphonia" closets made by defendant under your patent. Will you please state to the court what person connected with the defendant company would be likely to know better than yourself whether or not ten injectors like Defendant's Exhibit No. 17 have been made by the N. O. Nelson Manufacturing Company?

Objected to as not cross-examination nor relevant to any issue in this case, but simply a fishing expedition which is not, and probably never will be, a matter of any consequence; it certainly cannot be unless complainants' pretended patents are held to be of value and the defendant infringer.

A. In answer to that I would state that the book-keeper of the N. O. Nelson Manufacturing Company, who is the only party who figures up my royalty book every month, would be more likely to know than I would, having not figured the royalty of that month or any month.

486 X Q. 72. You must know, if you understand English, that my question did not refer to any particular month. I will now ask you whether you mean that you do not know whether or not the N. O. Nelson Manufacturing Company has made ten injectors like Defendant's Exhibit No. 17 since it first began to manufacture them.

Objected to as being already answered two or three times by the witness and as irrelevant and immaterial to the issues in this and not growing out of the direct examination.

A. I cannot give any better answer to that question than I have already given.

X Q. 73. Under how many patents do you draw royalties from the N. O. Nelson Manufacturing Company?

Objected to as leading, not cross-examination, irrelevant, incompetent, and impertinent to the issues of this case.

A. To the best of my knowledge, about thirty.

X Q. 74. Then the defendant company does not account to you

for the number of devices made under each one of your patents, respectively, does it?

Objected to as a mere statement of counsel and not a question, as not cross-examination, irrelevant, incompetent, and immaterial.

A. Yes, sir.

X Q. 75. Do you mean to say that it does?

A. Yes, sir.

X Q. 76. If it accounts to you for royalties paid to you under each of your patents, how is it that you are unable to state the number of machines or approximately the number of machines made
487 by the Nelson Manufacturing Company under your patent of May 24, 1887? Please explain this to the court.

Objected to as irrelevant and incompetent and immaterial and as having been explained again and again by the witness as explicitly as he is able to explain it.

A. Because when the book-keeper fills out my account of royalty according to the number of articles that he sees entered into the book, knowing the amount of royalty each patented article calls for, and I in years past having occasion to examine my book always found it correct, and the thought of finding out the exact amount or number of pieces manufactured of the different patented articles in which I receive royalty. I only examine the amount my royalties figure up to at the end of each month.

X Q. 77. The "Syphonia" closet like that illustrated in Complainants' Exhibit 11, and having parts in it like Complainants' Exhibit "Defendant's Tank" and Complainants' Exhibit "Defendant's Bowl," is a good closet, is it not?

Objected to the question as incompetent and immaterial.

A. Yes, sir; it is.

X Q. 78. It is now known as the "Syphonia" closet, is it not?

A. Yes.

X Q. 79. This "Syphonia" closet is the one made by the N. O. Nelson Manufacturing Company, is it not?

A. Yes, sir.

X Q. 80. This "Syphonia" closet is popular with the trade, is it not?

Objected to as assuming the fact, to wit, that he knows what
488 is popular with the trade, and as irrelevant, incompetent, and immaterial.

A. Yes, sir.

X Q. 81. How do you know that?

A. From hearing traveling men speak so.

X Q. 82. How long has it been popular?

Objected to as irrelevant and immaterial and as not growing out of the direct examination and as calling for mere heresay, the witness himself not coming into contact with the trade, but simply working in a factory.

A. I couldn't say how long it has been popular; it's only a new article lately put in the market.

X Q. 83. How long has it been put on the market?

Objected to for the same reasons last stated.

A. To the best of my recollection, since April or May, 1887.

X Q. 84. This Syphonia closet is a popular article and has been put on the market by the N. O. Nelson Manufacturing Company since April or May, 1887, and you supervise the manufacture of it and receive a royalty upon each one sold, and yet you are not willing to swear that you do not know whether or not ten of these Syphonia closets, embodying the invention of your patent of May 24, 1887, have been made by the N. O. Nelson Manufacturing Company. Is that what you want the court to understand?

Objected to by the counsel for the defendant, first, because the witness does not state that he receives a royalty on Syphonia closets made and sold by the defendant, but simply that he receives
489 a royalty on the patented feature in connection with said water-closets, so far as the same is used in its construction, and as described in letters patent marked "Defendant's Exhibit 18;" and, second, the witness has said he does not remember how many Syphonia water-closets have been constructed by the defendant embodying any part of his said invention.

A. I do not know, because I have never figured the amount that was made.

X Q. 85. Has the N. O. Nelson Manufacturing Company made as many as ten Syphonia closets, such as those which we have just discussed, and which embody — their construction — invention of your patent of May 24, 1877?

Objected to as leading, it not being cross-examination and the witness being complainants' own witness, and as irrelevant, incompetent, and immaterial.

Complainants' counsel states that this line of examination is conducted for the purpose of inquiring into the veracity of the witness and as affecting the credibility of his testimony.

Counsel for the defendant says the matter inquired about is absolutely irrelevant to the issues in this case, and has been answered over and over again in vain repetitions of irrelevant questions; can no more impeach the credibility of a witness like Mr. White than vain repetitions can appease a heathen idol.

A. I would have to answer the same as before. I couldn't say, because I have never figured them up.

490 X Q. 86. At different times since you were produced as a witness upon the stand in this case have you not consulted with defendant's counsel in regard to matters pertaining to your testimony in this case?

A. Yes; in so far as they asked me questions of information and I answered them.

X Q. 87. This has occurred two or three times between adjournments of the taking of this testimony?

A. I couldn't say exactly how many times. Conversation touching the case were naturally talked of.

Redirect examination by defendant's counsel, S. N. TAYLOR, Esq.:

R. D. Q. 1. Are you acquainted with Mr. Arthur Fraser, who testified for the complainant in New York as an expert in this case?

A. Yes, sir.

R. D. Q. State whether or not he has been present ever since the testimony was begun in this case, counseling and making suggestions to Mr. Bakewell, solicitor for the complainants, as to the method and manner of conducting the examination.

A. Yes, sir.

R. D. Q. 3. Mr. Fraser has been present all this afternoon, has he not, counseling with Mr. Bakewell during your cross-examination?

A. Yes, sir.

R. D. Q. 4. Have you ever been the solicitor of the N. O. Nelson Manufacturing Company?

A. No, sir.

R. D. Q. 5. Have they ever sent you off to hunt up testimony in thir case?

A. No, sir.

491 R. D. Q. 6. Have they ever employed you in this case or in any other case to become assistant counsel?

A. No, sir.

R. D. *R.* 7. Your interest, then, differs from that of Mr. Fraser's, does it?

A. Yes, sir.

R. D. Q. 8. In your cross-examination you spoke about sending to the Patent Office for obtaining office copies for letters patent on pneumatic water-closets. Was it your purpose to gain practical ideas of the construction of water-closets or to discover what others pretended to be their inventions, and so construct pneumatic water-closets as not to interfere with pretended rights?

Objected to as leading and as suggesting to the witness the answer desired.

A. It was my idea of obtaining practical ideas for constructing water-closets different from those covered by the patents.

R. D. Q. 9. Please state whether your idea was to embody in a construction what others claimed in letters patent.

Last objection repeated.

A. It was not my idea to embody anything what others claimed to be their patent.

R. D. Q. 10. Mr. White, state how many tanks the flushing apparatus of the Syphonia water-closets constructed by the defendant had.

Complainants' counsel objects to the question as vague and as incompetent, irrelevant, and immaterial.

A. I don't know, having never figured them.

R. D. Q. 11. You evidently misapprehend my question. What I desire to know is whether the N. O. Nelson Manufacturing Company made and sold any Syphonia water-closets which contained a reservoir tank and also a flushing chamber adapted to be filled therefrom.

492

A. No, sir; they never have.

R. D. Q. 12. Then the pneumatic water-closets made and sold by the N. O. Nelson Manufacturing Company, none of them, had both a reservoir tank and flushing chamber, as I understand you?

Objected to as leading.

A. No, sir; they never had.

R. D. Q. 13. Then, if I understand you correctly, the pneumatic water-closet made and sold by the defendant did not have in combination a reservoir tank and flushing chamber?

Objected to as leading.

A. No, sir; they never had.

R. D. Q. 14. The pneumatic water-closets and all of them sold by the defendant had simply a tank like this, marked "Complainants' Exhibit Defendant's Tank," did they?

A. Yes, sir.

R. D. Q. 15. And none of them had a flushing chamber under the tank, did they?

A. And none of them had a flushing chamber under the tank.

Recross-examination:

R. X Q. 1. During the whole course of your examination have you heard any remark made by Mr. Fraser to me about this case? I mean while you were on the stand.

A. No; I haven't heard the words so I could understand them, but I have heard the sound of his voice speaking into your ear while you were putting the questions to me, and also I have heard the same sound of his voice speaking to you while defendant's counsel was examin-g me.

493

R. X Q. 2. In answer to question two of the redirect examination you state that Mr. Fraser has been present ever since the beginning of the testimony in this case, counseling and making suggestions to me as to the method and manner of conducting this examination. What foundation in truth is there for this statement?

A. I don't know as to what he was speaking about in speaking into the ear of plaintiff's counsel, but I suppose naturally that he was prompting him in the examination.

R. X Q. 3. You swore in answer to the question referred to that he was counseling and making suggestions to me as to the method of conducting this examination, did you not?

A. I was under the impression since the opening of the case that he was assistant counsel to you.

R. X Q. 4. You are not asked what you impression- were in that question.

A. I thought he was.

R. X Q. 5. You don't know whether or not he was, do you?

A. Positively I don't know.

R. X Q. 6. You guessed at that, as you have to many other things as to which you have testified in this case, did you not?

Objected to by counsel for the defendant because it was not a guess when he said, "Mr. Fraser was counseling Mr. Bakewell," since it was manifest from Mr. Fraser handing the exhibits to Mr.
494 Bakewell and pointing out parts of the same to him on which to cross-examine the witness and frequent whispered consultations that the witness had the right to infer that Mr. Fraser was assistant counsel in the case.

A. Seeing the action of Mr. Fraser with my eyes in whispering to plaintiff's counsel and judging from reason that he certainly must have a right or some great interest in the case for acting.

Counsel for complainants objects to the statement of defendant's counsel preceeding the answer of the witness, as it is thereby intended to interject in the record a mere verbal statement of counsel instead of proper proof and as a mere means of suggesting an answer to the witness.

PETER WHITE.

Subscribed and sworn to before me by Peter White this 8th day of June, 1888.

GEORGE M. BLOCK,
Special Examiner and Notary Public.

Examination of Peter White is here closed.

Thereupon, by consent of all the parties hereto, the further taking of this testimony was continued until Saturday, the 9th day of June, 1888, at nine o'clock a. m., at the same place.

GEORGE M. BLOCK,
Special Examiner and Notary Public.

495 In the Circuit Court of the United States for the Eastern Division of the Eastern District of Missouri.

HENRY HUBER and JAMES E. BOYLE
vs.
N. O. NELSON MANUFACTURING COMPANY. } In Equity.

Continuation of Depositions on the Part of the Defendant in the Above-Entitled Cause on June 9, 1888.

In pursuance of adjournment yesterday, C. M. WOODWARD, a witness produced and sworn on behalf of the defendant, in answer to questions deposes and says as follows:

Direct examination by Mr. REX:

Int. 1. Professor, please state your name, age, and place of residence.

A. My name is Calvin M. Woodward; fifty years old. I reside in this city.

Int. 2. What is your occupation?

A. I am professor of mathematics and mechanics in Washington University and director of the manuel training school.

Int. 3. I now hand you Complainants' Exhibit 1, being letters patent No. 260,332, granted to Henry Huber, as assignee of Messrs. Peters and Donald, and I will ask you if you have read this patent, the specifications of it, and examined the drawings and are familiar with it and understand it.

A. I have, and I understand its construction and working as shown here.

496 Int. 4. Please state, with reference to the drawing forming a part of the exhibit, what the parts of the closet described in the patent and showing in the drawing are.

A. They consist, first, of a reservoir tank, 7, in connection immediately below a flushing chamber or a vacuum chamber, 6, connected with the last, a flushing pipe, 14, leading to the bowl 1, and a trap, a passage in the soil pipe, and then another trap, the soil pipe containing a chamber of air between the two; from the air chamber in its double trap a suction pipe, 5, connecting with the partition between the tank and the flushing chamber. Those are the principal parts. Next I see a valve controlling the passage of water from the tank to the flushing chamber, a valve controlling the flow of water from the flushing chamber to the flushing pipe, a check-valve in the suction air pipe. In the tank 7 is a float which controls the water supply both to the tank above and by means of the bleeder pipe 15, which connects with the flushing pipe below the valve in the same. I notice a chain connecting the valve between the tank and the flushing chamber, and a valve at the entrance of the flushing pipe; a lever, 10, with a ch-in attached, by which the user of the closet is at liberty to start all the work in operation.

Int. 5. State how a closet constructed in accordance with this specification and drawing, if started in operatiou where the vacuum chamber 6, the traps, and the soil pipe leading from the bowl were full, how the closet would operate when it was started into operation.

A. The operation is begun by the user of the closet pulling on the chain attached to the lever 10. The first effect of such a pull is to raise the valve 11 in the cylinder beyond the opening C, which formed the connection between the tank 7 and the flushing
497 chamber 6; that closes the connection between the tank and the flushing chamber. Immediately after that opening is closed and the valve is sealed, the valve 8 is opened by means of the chain 9, and the water starts on its downward passage through the flushing pipe toward the bowl immediately. As soon as this cur-

rent is started a partial vacuum is formed in the top of the sealed chamber which rarifies the air in the suction pipe 5, causing a diminished pressure in the air space 4, which syphons the upper trap at once, so that its contents pass over into the lower trap. That would happen almost instantly or probably before the water reached the bowl or simultaneously with it, perhaps. The air, as the water continues to flow down the flushing pipe, additional air is sucked from the chamber 4, through the pipe 5, into the top of the chamber 6, so that the upper trap is broken again and broken repeatedly so long as that flow is continued, air being all the while drawn in as it is broken to the chamber 4, drawn through the pipe 5 to the top chamber 6. That operation would continue until the chamber 5 was exhausted, supposing the valve is kept open that length of time. The valve operation stops when the user releases his hold upon the valve; the valve 8 closes of its own weight. The valve 11 is brought down by the counter-weight on the lever 10, so that, in the first place, no more water is discharged from the flushing chamber below immediately after water is admitted from the tank above. As the water enters the air in there is forced out through the pipe by which it entered until a slight excess of pressure lifts the check-valve in 16, and this air then passes off through the outlet pipe at the top of the apparatus. That discharge continues until the flushing chamber is refilled. The filling is effected by the dropping of the float-valve 12, which sets in motion two currents, one into the tank 7 directly, and another by the bleeder 15 into
498 the flushing pipe 14. This bleeder current runs into the bowl steadily until the flushing tank is filled. It insures an abundant supply in the bowl itself, and the apparatus now is in its former condition. I might call attention to a slight inaccuracy of drawing in this figure as shown me. It apparently illustrates a condition of things when there is a slight excess of pressure in the chamber 4, whereby the upper trap has its bowl surface slightly higher than the discharge surface. That is right, but the lower trap, the relation of surfaces is wrong.

Int. 6. State whether by a proper proportioning of the parts, if it were desired, this closet could be so made that the water would not all leave the bowl until its place was supplied by the water coming down the flushing pipe.

Objected to as immaterial.

A. Certainly, such an adaptation could be easily effected.

Int. 7. What would you call the vacuum chamber shown in the drawing you have referred to and marked figure 6?

A. The vacuum chamber is the closed space that is marked 6.

Int. 8. What I mean is what is the name of such a pump as is there shown?

A. Well, this is an aspirator, as the term has been used. The chamber 6, originally filled with water, is the chamber which receives the air that is drawn in, and hence it is properly an aspirator according to the original form of that apparatus.

Int. 9. Then this is one form of aspirator, as I understand you, or a form of aspirator?

A. It is.

Int. 10. State whether or not there are other forms of aspirators; if so, mention such as you know of.

499 Objected to as incompetent, irrelevant, and immaterial.

A. There is a great variety of aspirators. This is one form. The form known as the Sprengel pump and modifications of that have been known for a great many years, some of them involving jets of water that pass through currants of air, and all known as aspirators. It is a general term for all pieces of apparatus which produce a diminished pressure of air behind them, and, as is ordinarily said, suck the air along through any given space. The earliest form of aspirator with which I am acquainted was called by the French Trombe, used by the French years ago in sucking air through holes in the side of a wooden water pipe or log, and subsequently forcing it through the tweers of a blast furnace. Then Johnson invented an apparatus in 1852, or devised it—I don't know — he invented it—called an aspirator. Sprengle's was published in all the journals in 1865. Bunson devised a jet pump, published in one of his scientific papers years ago, and afterwards followed on a large scale by Captain Eads in the constructions of his sand pump. Professor Thompson invented a certain kind of aspirator or injector. I will say that these pieces of apparatus form two functions; the act of sucking on one side involves a pressure on the other. The two parts are necessarily connected. Every piece of apparatus that sucks air from one space forces it into another. Sometimes the desirable element is a sucking principle, and sometimes the desirable element is a forcing principle. In the one case it causes a partial vacuum, and in the other a plenum. In all cases the mechanical principles are the same, and they have been familiar in all scientific journals and familiar to scientific men for fifteen or twenty years.

Int. 11. Professor, I now hand you a drawing which you will please examine and state whether you know what it represents.

500 Counsel for complainants objects to any testimony regarding the drawing handed to the witness as incompetent, irrelevant, and immaterial to any issue in the case.

A. This drawing represents the sand pump devised by Captain James B. Eads, tested by him in 1869. It is an apparatus by means of which a partial vacuum is produced by an annular jet of water forced through the base of the pump, carrying along with it the air which enters by an interior tube. This pump was used for the purpose of sucking up sand and water mixed from beneath the piers of the St. Louis bridge; but in order that its operation might be commenced its first function was always to suck up the air, as it was first necessary to suck all the air out of the suction tube before the water could follow. I was familiar with these pumps when they were constructed, and with the tests made upon them to determine the efficiency of their action. It may be interesting to know that the

vacuum caused by a jet of water in one of Captain Eads' sand pumps was so nearly perfect that the air within would sustain a column of only one and one-half inch of mercury instead of thirty inches of mercury as in the ordinary atmosphere; that is equivalent to lifting a column of water under ordinary atmospheric pressure nearly thirty feet.

Int. 12. State when, if you know, that pump was used in the construction of the St. Louis bridge.

Objected to as incompetent, immaterial, and irrelevant.

A. It was used in 1869, 1870, and 1871 in the construction of the St. Louis bridge. It was subsequently used in New York for the construction of the Brooklyn bridge. It has been used probably every year since in the construction of bridges all over the country where the foundations have been sunk by the pneumatic process through layers of sand.

501 The drawing referred to is here offered in evidence by defendant's counsel, marked "Defendant's Exhibit No. 23."

Plaintiffs' counsel objects to the introduction in evidence of said exhibit on the ground that it is incompetent, irrelevant, and immaterial to any issue in this case.

Int. 13. Please take Defendant's Exhibit No. 23 and state, with reference to the drawing, how a pump constructed according to that drawing operates.

A. The water which produces the jet enters on the side, as is shown in the drawing by the arrow and lettered "water." It passes into an annular pipe which surrounds an interior pipe and descends, as shown by arrows in the drawing, to the enlarged part, where the water turns and flows upward through a thin ring around the mouth of the suction pipe. The jet is, therefore, an annular jet or a conical jet, the axis of the cone being vertical. The suction pipe is shown vertically and below is the annular jet. It is lettered in the drawing "sand and water" and is three inches in diameter. The drawing shows but a portion of this suction pipe. It is understood, however, that this suction pipe falls into a small tank a few feet below the pump, which is to be filled with the material to be thrown out. As the jet flows upward all that enters the suction pipe goes up with it, as shown by the arrow in the main pipe, and is carried vertically through the central tube.

Int. 14. I here hand you Defendant's Exhibit No. 19 and refer you to pages 11 and 12 thereof under what appears there under the head of the "jet pump," especially to figure 9, on page 12, showing such a pump, and ask you to examine and state whether or not you understand its action.

Objected to as incompetent, irrelevant, and immaterial.

502 A. I understand the action of this pump perfectly.

Int. 15. State how it operates, referring in your explanation to figure 9.

A. Referring to figure 9, on page 12, the operation of this pump

involves two stages. At the beginning of its operation the suction pipe H is filled with air, and what is called here the vacuum chamber G is also filled with air, and the discharge pipe F also. When the operation of this pump begins the current of water descends from the tank B through the pipe A and through the nozzle E. It carries with it a portion of the air in the little chamber surrounding the nozzle E down through the pipe F. This causes a suction in the pipe H and the water rises in said pipe from the reservoir supply C. This operation of extracting air from the little chamber around the nozzle continues. Water continues to rise in the suction pipe until all the air is extracted and all the pipes are full of water; then the first stage is finished. The current of water now descending through the nozzle forces the water around the mouth of the nozzle along with it, causing a continual upward current in the pipe H and a downward current from both sources through the pipe F to the level D. By means of this pump water from the tank B is made to lift water from the tank C into the tank D. That operation will continue so long as the supply of the tank holds out.

Int. 16. I now again refer you to Complainants' Exhibit 1, which you have already examined, especially with reference to the aspirator therein shown, and ask you whether or not there was any other aspirator known in 1880 and prior thereto which could have been substituted for that aspirator; and, if there was, please state what it was.

Objected to as leading, as incompetent, irrelevant, and im-
503 material to any issue in this case.

A. The pump I have just described would, during its first stage of operations, exactly take the place of the aspirator, as shown in this drawing, the suction pipe H corresponding almost exactly to the suction pipe 5 in the Peters and Donald figure, the discharge pipe F being substantially the same thing as the flushing pipe 14, shown in that figure. The same thing could have been effected equally well by a pump similar—by Capt. Eads' pump shown in Exhibit 23. These two pumps are types of several pumps. In figure 9 of the encyclopædia the jet of water which causes the rarification of the air is in the center; the air surrounds it. In Exhibit 23, Capt. Eads' sand pump, the jet of water is on the outside and the air is in the center. Those are material points, but they are points of difference in their construction simply.

Int. 17. Please state whether or not it was known as early as 1880, to those skilled in the art of construction of aspirators, jet pumps, and other forms of aspirators, that an injector or aspirator, such as is shown in figure 9 of Exhibit 19, which you have just referred to, could be substituted for a vacuum chamber, such as is shown in the drawing of Peters and Donald's patent, referred to and sued on, which is lettered figure 6, for the purpose of creating a partial vacuum in an air space between two traps in a closet, having bowl and traps like the one shown in the Peters and Donald's patent.

Objected to as leading, as relating — a question not raised by the

pleadings in this cause, and as an attempt to contradict by a mere hypothesis facts as disclosed by this record, and as incompetent, irrelevant, and immaterial to any issue in this case.

504 A. It certainly was well known to every one familiar with aspirators and suction air pumps and skilled in their use.

Int. 18. State whether or not a mechanic having the Peters and Donald's patent before him and thoroughly understanding it and the drawing thereof would, prior to or as early as 1880, have had suggested to his mind, if he had been acquainted with other forms of air and water pumps then well known and in use in this country, any other form of pump which was then known which could be substituted readily for the form of pump shown in the drawing of the Peters and Donald patent and which would perform the function performed by that pump so far as the pumping and the emptying of the bowl and flushing of the bowl is concerned.

Objected to as vague, as leading, as attempting to raise a question not presented by the pleadings in this case, and as asking the witness for an expression of his opinion on a question of law for the court to determine on the art, as presented in this cause, and as irrelevant, incompetent, and immaterial.

A. In my judgment the mechanic who thoroughly understood the Peters and Donald apparatus, and was equally familiar with what was well known with regard to air pumps and methods of sucking air prior to 1880, would have seen several equivalent pieces of apparatus for performing the three functions that you speak of, namely, withdrawing the air from the chamber between the two traps syphoning the upper bowl and flushing the upper bowl.

Int. 19. State which one of the equivalent devices that you have referred to you think would be most naturally suggested by
505 the form of aspirator shown in the Peters and Donald patent as one which would perform said function.

Objected to as incompetent, irrelevant, and immaterial.

A. It seems to me that an injector similar to Captain Eads' pump inverted would be a very natural and simple substitution. By inverted I mean that the discharge would be downward instead of upward, as shown on the drawing in Exhibit 23. Another simple and natural substitution would be the one shown in figure 9 of Chambers' Cyclopædia, letting the suction pipe H be connected with the space between the two traps, the pipe H being the flushing pipe, A being the connection between a reservoir tank, B, and an injector, E. Either one of these substitutions would seem to me to be very easy and natural.

Int. 20. Suppose such a substitution had been suggested to the mind of the mechanic at that time prior to 1880, would it, in your opinion, require anything more than ordinary mechanical skill to have adapted the injector or other form of aspirator which you have referred to to the desired purpose, and arranged it so that it would perform the desired function in this closet of Peters and Donald's

in place of the vacuum chamber shown in the drawings of Peters and Donald's patents?

Objected to as leading, incompetent, irrelevant, and immaterial, as suggesting to the witness the answer desired, and as an attempt by a mere hypothesis to contradict the facts that are disclosed by this record, and as asking an opinion of the witness as to a question of law for the court to determine.

A. It seems to me that the adaptation is very easily made.

506 Int. 21. And, in your opinion, would a mechanic have introduced the injector in the construction of a closet of this kind in place of the vacu-m chamber shown in Peters and Donald closet? If so, where would he have placed it and how would he have arranged the mechanism?

Objected to as totally incompetent, irrelevant, and immaterial to any issue in this case.

A. In my former answer I spoke of the three functions which were to be performed or secured by a modification of this sort of air pump. Do I understand you to ask me how he would effect the change, simply performing those three functions or a fourth which the Peters and Donald patent does perform?

Int. 22. The question is simply as how he would arrange it, as I have heretofore spoken of, so it would operate to create a vacuum or partial vacuum between the traps for the passage leading from the bowl to suck the water out of the bowl in that space previously occupied by the air, substantially as it is done in this case, so far as the pumping is concerned.

Last objection repeated.

A. If no thought is to be given to the question of where the air that is pumped out goes to, then the substitution would be very easily made. This flushing chamber or vacuum chamber marked G in the Peters and Donald patent would be omitted in valves on each side of that chamber — would unite and become one valve. The suction pipe 5 would be connected directly with the flushing pipe below the valve, which would then be the only vacuum chamber that would exist directly around the injecting nozzle. All other parts would remain as they are.

Int. 22½. You haven't stated where the injector is.

507 A. The injector would be immediately below this single valve, which would take the place of these two or somewhere in the flushing pipe; it might be near the top, or half way down, or near the bottom, it would make no difference; it has got to be somewhere in the flushing pipe, but below the valve, of course; the valve is at the top.

Int. 23. Do I understand you that the air pipe leading to the space between the two traps would be connected with the injector?

A. Yes, sir.

Int. 24. In such a construction as you have mentioned, what effect would the act of opening the flushing valve have upon the

operation of the closet, provided the tank were filled at the time with water and the traps and passage leading from the bowl are also filled?

Objected to as immaterial and irrelevant.

A. Were the valve raised the water would rush at once from its own weight through the injector into the flushing pipe; as it passed through the injector it would cause the air to flow with it, producing a sucking action on the suction pipe, and by means of it on the air in the space between the two traps. The suction would siphon the upper bowl, and as the water enters the bowl through the flushing pipe it would continue to be siphoned so long as the flow continued.

Int. 25. You have spoken of other functions performed by the vacuum chamber 6 than that of the pump. What other functions does it perform?

A. One important function of the vacuum chamber is that it stores the air drawn from the air space 4 between the two traps so long as the flow continues, none of it escaping down through the flushing pipe whatever. When the flow is finished by the dropping of the two valves that air which came from the air
508 space 4 is then forced out through the pipe 5 and the check-valve 16 presumably to the outside of a building. That function of storing and then discharging externally all the air from that air space is, in my judgment, a very important function.

Int. 26. Where an injector is substituted for such a vacuum chamber as is shown in Peters and Donald's patent, what becomes of the air which is sucked in the space between the two traps by the flow of the water down to the suction pipe through the injector?

A. The air enters the injector and there mixes with the flushing water, passes down the flushing pipe into the bowl where it diffuses through the atmosphere that is there and goes with it, either rising up or falling down.

Int. 27. Would not all the air thus carried into the bowl be disseminated through the room—air or gas?

Objected to as leading.

A. Some of it most certainly would.

Int. 28. Which form of pump would you consider best to use in a closet of this description if you had an eye to sanitary perfection, the form of aspirator shown in the Peters and Donald patent or the other form knows as the injector? State your reasons for the preference, if you have any.

Objected to as immaterial.

A. From a sanitary point of view, the form as shown by Peters and Donald is perfect. The air is drawn from the space 4, which is necessarily more or less contaminated, both from contact with the matter in the two traps and by diffusion through the lower trap. The atmosphere, on one side being saturated and on the other side

being undercharged with noxious gases, is all carefully discharged outside of the building in which the closet is put. That is
509 the perfection of sanitary arrangements. The closet which discharges that same air into the bowl and thereby into the room is to that extent defective.

Int. 29. I will ask you whether there would be any access or any passage through which the air could pass from a space between the two traps to the outward air of the room in a closet constructed like the Peters and Donald closet, where the closet is at rest.

A. None whatever. I assume good workmanship in the construction.

Int. 30. Would you consider, then, the substitution of an injector beneath the plain reservoir tank in place of a vacuum chamber such as is shown in the construction of a closet substantially like that shown in Peters and Donald in other respects an improvement or otherwise?

Objected to as vague, as incompetent, irrelevant, and immaterial.

A. From a sanitary point of view, I should say it was a step backwards.

Int. 31. I now ask you, Professor, to examine Defendant's Exhibit No. 14, being a tank constructed according to the Peters and Donald patent, and ask you if you ever saw the flushing apparatus in operation.

Objected to for the reason that no foundation has been laid for the question; and further objected to as incompetent, irrelevant, and immaterial to any issue in this case.

A. I saw a tank the other day and a complete set of apparatus at the works of the N. O. Nelson Manufacturing Company which was said to be a Peters and Donald closet. I saw it in operation.
510 This looks like a part of it. I see several features here which suggest that it is an accurate model. I see the tank above which is numbered 7 in the drawing. I observe a chamber below which appears to be sealed and which is numbered 6 on the drawing. I see a float in the tank above, a pipe which would seem to me a supply pipe for filling the reservoir, a small bleeder connected with the discharge of this supply pipe, which is also connected with the extreme point at the bottom, which suggests that it is the top of the flushing pipe, and here is an arrangement that suggests the two valves, with a chain between the two, a valve at the top of the flushing pipe, which controls the discharge from this lower chamber into the flushing pipe, and a valve above, with several openings through which water runs from the open reservoir into the sealed chamber. This differs from the drawing in having some eight openings around the side instead of one, as the drawing shows. This is an immaterial matter; quite so. The number of these openings is a matter of no consequence. I notice here a pipe that appears to be connected with the sealed chamber, which resembles pipe 5 in Peters and Donald's drawing, which has, at its topmost point, a small flexible valve which opens upwards, which suggests the check-valve 16

in the drawing. I also observe a lever with a counter-weight, which resembles the lever 10 which connects with this valve stem, and therefore it is like the drawing in that regard. I notice that there is no depression in the upper service of the sealed chamber, as there is in the drawing, to receive the floating ball, but that is quite immaterial.

At this point counsel for defendant has the valves attached to each other, which have been referred to by the witness, marked Defendant's Exhibit No. 14 F, and offers the same in evidence, stating that hitherto it has been in evidence with the Defendant's
511 Exhibit No. 14, but, that there may be no mistake about the valve spoken of by the witness, it is offered for identification more particularly.

Plaintiffs' counsel objects to the introduction of the exhibit in evidence as immaterial to any issue in this case.

Int. 32. Defendant's Exhibit 14 F is the valve you have just referred to, I believe?

A. This is marked Defendant's Exhibit 14 F. These are the valves to which I have referred.

Int. 33. I will ask you to state whether or not the closet which you saw in operation, as you have stated, operated perfectly as to emptying the bowl and resealing it and flushing it and filling the traps.

A. It appeared to operate well.

Int. 34. I now hand you Complainants' Exhibit No. 2 and I will ask you whether or not you have read the specifications and examined the drawing and understand the operation of the closet constructed in accordance therewith and understand the drawings and specifications of the patent.

A. I have examined this document, drawings, and specifications, etc., and I understand the principles upon which the closet is supposed to act, and I understand how this would act and does act. There is but a single point upon which I do not understand the specifications.

Int. 35. I will ask you whether or not in the closet constructed like figure 1, the Boyle reissue, the air or gas which may accumulate between the traps C and D has free access into the room when the closet is at rest.

Objected to as leading and as incompetent, irrelevant, and immaterial, and not pertinent to any issue in this case.

512 A. When the closet is at rest the suction pipe *e*, the space between the pipe and the space inclosing the pipe, which space is marked T in figure 1, the cavity about the injector G and I, the flushing pipe I, are all free from water—not filled with water; consequently the air in the space B has free access through the pipes and passages I have mentioned into the bowl A, as well as with the external air through the pipe *f*.

Int. 37. Please state whether or not, in your opinion there would be any draft through the flushing pipe I when the closet is at rest

and in case the air pipe *f* was connected with the air outside of the building.

A. The pipe *l* is freely connected with the pipe *f*, thus forming a continuous passage-way for the air from the bowl A to the external air. The extent of the draft or flow of current in that pipe depends upon the relative density of the air in the pipe to the external air. If the air in the pipe is lighter than the external air, which would be the case when the air in the pipe is warmer than the external air, then the current would be upwards through the pipe *l* and *f* to the exterior of the building. If, however, the temperature of the air in these two pipes *l* and *f* is lower than the temperature of the exterior air, the flow would be the other way, as the heavier air always flows downward and the lighter air always flows upwards. In the case of a current downward through *f* and *l*, air from the chamber B, which is all the while diffusing into it, having an excess of certain noxious gases, would contaminate the downward current and would contaminate either current to a certain extent.

Int. 38. In the summer time which direction would the draft be most apt to take, up or down, through these pipes?

513 Objected to as immaterial for the reason that the question has already been answered.

A. At night, if it is a cool night, the current would be upwards. In a hot day the current would be downwards, just as it is in chimneys which are not used.

Int. 39. The mere setting of a pipe on end does not create a draft through it, I suppose, regardless of anything else?

A. I have said that the question of the current is purely a question of relative temperature and density.

Int. 40. I will ask you whether or not in a closet constructed in accordance with figure 1 in the Boyle reissue patent the air pumped up through the suction pipe would not pass down to the flushing water into the bowl A when supplied in the ventilating pipe *f*.

Objected to as leading.

A. When the closet is in operation the chamber F is supposed to be full or partly full of water, so that the spaces between the exterior tube, which is F, and the next one inside of it are filled with water; consequently the air which comes up the suction pipe to the top of the bell tube must necessarily pass down in the annular space between that tube and the next tube in the injector, and then down the flushing pipe *t*. It has no other open passage-way whatever.

Int. 41. Then this closet described in the Boyle reissue, in which a pretense is made of preventing the sewer gas from getting into the room by sealing the flushing chamber F, as shown in figure 1, is, to a considerable extent, a humbug, so far as sanitary matters are concerned?

Objected to as leading, as stating a conclusion unwarranted
514 by the testimony, and as incompetent, irrelevant, and immaterial to any issue in this case.

A. I fail to notice that there was any pretense that the air pumped from the space B was not returned into the bowl A. If there was any such pretense it certainly was false.

Int. 42. I now hand you Exhibit 18, being Knight's American Mechanical Dictionary, vol. 1, and call your attention to an article beginning on page 169 and 170 entitled "Aspirator," and especially to the figures therein shown, and will ask you whether or not the aspirator shown in figure 392 is substantially the same as that shown in the Peters and Donald patent.

A. Figure 392 shows an aspirator identical in principal with the aspirator in the Peters and Donald closet.

Int. 43. I will also ask you to examine figure 393 of the said exhibit, on page 170 thereof, and ask you whether or not that instrument there shown is substantially the same as the injector I, shown in figure 6 of the Boyle reissue patent.

The last two questions are objected to as leading, incompetent, irrelevant, and immaterial.

A. Figure 393, which bears the title Sprengle's aspirator, is identical with injector "I" shown in figure 6, so far as the general relation of parts and principles are involved. The dimensions only are different.

Int. 44. I will ask you to state whether or not the two forms of aspirators which you have referred to as being respectively numbered 392 and 393 on page 170 of Knight's Mechanical Dictionary are
or are not mechanically equivalents of each other for the
515 purpose of pumping air by the means of the fall of water through them.

Objected to as leading, incompetent, irrelevant, and immaterial, and as assuming a condition of facts which the exhibits referred to do not justify.

A. They are equivalent in that they each draw air through a suction pipe; in so far they are strictly mechanical equivalents. There are minor points of difference which are merely questions of degree One is supposed to produce a very great rarification of the air and the other a very slight one. That is a difference in degree and not a difference in kind. One measures the air definitely and the other is intended to measure or give opportunity for measuring the amount of vacuum produced.

Int. 45. So far as producing rarification is concerned they do the same work in substantially the same way, do they not?

Objected to as leading, irrelevant, incompetent, and immaterial.

A. In each case the fall of water produces the rarification. It seems to me it is substantially the same mechanical principle in each case.

Int. 46. You have stated there is something in Boyle specification which you do not understand. Please refer to the Boyle specification and state what it is you do not understand.

A. On the third page of the specifications in the first column in

the middle of the second paragraph, line thirty, are these words: "The water from the passage T — the chamber F then commences to run out into the pipe I, the former flowing the more rapidly," etc.

I do not understand why the former flows more rapidly. I
516 deny that it would flow more rapidly. With that exception I understand all that is said, and see nothing contradictory or obscure in the specifications or drawings.

Int. 47. State, if you please, whether, in your opinion, so far as the pumping of the air from between the traps are concerned, the use of the injector shown in the Boyle reissue is or is not the mere mechanical equivalent of the sealed chamber of the Peters and Donald patent used to produce that effect. My question is limited simply to the creating of a partial vacuum between those traps, thus causing a syphoning of the water from the bowl.

Objected to as leading, incompetent, irrelevant, and immaterial, and calling for an opinion of the witness on a question of law for the determination of the court.

A. With that limitation the apparatus seems to me to be a mechanical equivalent, inasmuch as it substitutes one of the many methods to produce a suction upon the same principles.

Int. 48. State whether, in your opinion, a mechanic possessed of a knowledge of the use of injectors and aspirators would have known at a glance, as early as 1880, that the injector could have been applied to suck the air from the vacant space by the falling of water and thus cause a syphoning of the contents of the bowl.

Objected to as leading, as incompetent, irrelevant, and immaterial, and asking the witness to determine a question of law.

A. He certainly must have seen it at a glance.

Cross-examination by PAUL BAKEWELL, Esq.:

X Int. 1. Your statement of the manner in which the closet is constructed in accordance with the invention disclosed and
517 described in the Boyle reissue patent, Complainants' Exhibit No. 2, is from theory, isn't it?

Objected to as incompetent, in that it assumes a fact utterly contradicted by the record, in that it assumes that there is invention in the Boyle patent, whereas the record shows there is none.

A. It is from theory based upon all my observations.

X Int. 2. Have you ever seen a closet constructed in accordance with the specifications and drawings of the Boyle reissue patent in operation?

A. Not that I am aware of.

X Int. 3. Before giving your testimony in this case you had had the Peters and Donald patent, Complainants' Exhibit No. 1, and the Boyle reissue patent, Complainants' Exhibit No. 2, before you, had you not?

A. I had.

X Int. 4. Had you examined them carefully?

A. I did.

X Int. 5. When were these patents first called to your attention, if you can remmeber?

A. About two weeks ago.

Redirect examination:

Int. 49. Please state what knowledge and what experience you ever had touching hydraulics and hydraulic machinery. State fully and in detail.

A. For nearly twenty years I have been accustomed to make actual practical tests of apparatus connected with pneumatic and hydraulic pieces and parts and functions, and when I use the word theory it is to be understood that the theory that I use is a theory based upon all the facts and not upon half of them. The
518 problems I reason about are not ideal problems. Some people mean by theory ideal, omitting practical element. I do not. I include in theory all the practical elements that enter into the problem.

C. M. WOODWARD.

Subscribed and sworn to by C. M. Woodward, before me, this 9th day of June, 1888.

[SEAL.] GEORGE M. BLOCK,
Special Examiner and Notary Public.

Mr. TAYLOR (for defendant): I desire to ask Mr. Fraser one or two questions in regard to his connection to this matter, not as an expert, but simply as a fact in regard to his connection with this case. He has already *has* been sworn.

Int. Mr. Fraser, are you the partner of Arthur S. Browne, who appears as counsel in this case?

Objected to as incompetent, irrelevant, and immaterial.

A. I have a limited partnership arrangement with Mr. Browne, in so far as my patent-soliciting business in New York is concerned.

Int. He is the Arthur S. Browne who appears as counsel in their case, is he?

A. He is the same.

Int. Was this bill of complaint drawn at your office in New York?

Objected to as irrelevant and immaterial.

A. No; that bill of complaint was drawn by Mr. Browne in Washington.

Int. At the time when he was your partner?

A. In order to answer that question I shall have to explain the arrangement existing between Mr. Browne and myself. The
519 firm of Arthur C. Fraser & Co., solicitor- of patents, is composed of Arthur C. Fraser and George H. Fraser, my brother, and Arthur S. Browne, of Washington, has a one-per-cent. interest in the patent-soliciting business. My firm has no interest whatever

in Mr. Browne's law business, which he conducts at Washington, quite irrespective of his partnership agreement. Mr. Browne's connection with my firm is of the nature of what are called associate attorneyships in Washington—that is, he represents my firm before the Patent Office in any matters requiring personal attention there, and in order to enable him to sign the firm name as a partner he was given a very small partnership interest. Whatever he does in the way of service for my firm in Washington, beyond what the share of profits coming to him through that one-per-cent. interest would amount to, he is paid for by his time.

Int. Did you arrange with him to conduct this case?

Objected to as incompetent, irrelevant, and immaterial; and counsel for plaintiff states to the witness that he need not answer that question if he doesn't care to do so, and would ask that the matter be certified to the court to determine as to whether or not this examination of this witness in regard to the matters concerning which he is now questioned shall proceed.

A. I have no objection to stating that I recommended Mr. Browne's employment in this case.

Int. Are you not interested in the fees to be paid in this case to counsel and attorneys?

A. No.

Int. You have been here ever since this examination began
520 at the taking of testimony for the defendants, aiding and assisting Mr. Bakewell, have you not?

Objected to as incompetent, irrelevant, and immaterial to any issue in this case and impertinent.

A. Yes; at his request I have come here to advise him upon technical matters relating to this case.

Int. You employed Mr. Bakewell, did you not, for the plaintiffs?

Objected to as incompetent, irrelevant, and immaterial and impertinent.

A. I advised Mr. Bakewell's employment.

Int. You advised this suit, did you not?

Objected to as incompetent, irrelevant, and immaterial.

—. And were the sole party that advised the plaintiffs to bring this suit, were you not?

Counsel further instructs the witness that he need not answer the question unless he desires to do so.

A. No, sir.

Int. You say you are not the sole one that advised it. You are the first that advised it, are you not?

Objected to as incompetent, irrelevant, and immaterial; and counsel further instructs the witness that he need not answer the question unless he desires to do so.

A. No; I was not.

Int. You were the solicitor who solicited the original Boyle patent, of which the reissue was sued on, were you not?

521 Objected to as incompetent, irrelevant, and immaterial.

A. Yes, as I have already testified in New York.

Int. You were the solicitor who solicited the reissue, were you not?

Last objection repeated.

A. Yes, sir.

Int. You were the expert in New York that testi- for the plaintiffs in this case, I believe?

A. Yes; certainly.

Int. And you appear here as the adviser of Mr. Bakewell in behalf of the plaintiff, do you not?

Objected to as leading, incompetent, irrelevant, immaterial, and impertinent.

Int. As adviser and assistant in conducting this examination?

A. Yes, as before stated, and as I have at other times been called upon to assist in the same way for the information of counsel in patent cases in which I have acted as expert.

Int. You are here, then, at the request of the plaintiffs in this case. Are you doing what you have been doing at their instance and request?

Objected to as incompetent, irrelevant, immaterial, impertinent, and leading.

A. Well, of course, I should not have come here at my own instance and on my own motion.

Counsel for the complainant notifies counsel for the defendant that on or before the hearing of this case he will move to have this deposition of Arthur C. Frazer stricken from the records as impertinent, irrelevant, and immaterial.

ARTHUR C. FRASER.

522 Subscribed and sworn to before me by Arthur C. Fraser this June 9th, 1888.

GEORGE M. BLOCK,

[SEAL.] *Special Examiner and Notary Public.*

Counsel for defendant here offers in evidence Patent Off-ce copy of specifications and claims of letters patent No. 72810, dated December 31, 1867, and issued to Hugh H. Gragie for improvement in water supplies for water-closets, and the same is received in evidence and marked "Defendant's Exhibit No. 24."

Plaintiffs' counsel asks defendant's counsel for what purpose said patent is offered in evidence.

Defendant's counsel states that it is offered as in a manner manifesting the state of art in relation to water-closets and improvements in water-closets and also as bearing on other defenses touching the patents here involved.

Plaintiffs' solicitor objects to the introduction of said exhibit in evidence as incompetent, irrelevant, and immaterial to any of the issues in this case.

By consent of parties, plaintiff and defendant, the further taking of these depositions *were* continued until July 3, 1888, then to be continued at the hour of ten o'clock a. m., then to be pursued pursuant to the stipulation.

GEORGE M. BLOCK,
[SEAL.] *Special Examiner and Notary Public.*

523 In the Circuit Court of the United States for the Eastern Division of the Eastern District of Missouri.

HENRY HUBER and JAMES E. BOYLE
vs.
N. O. NELSON MANUFACTURING CO.

In continuation of the testimony taken in behalf of the defendant to the above-entitled cause parties met at the office of Taylor & Pollard July 3, 1888, being at the hour of ten o'clock a. m., in pursuance of the last continuance.

Present: Paul Bakewell, counsel for complainants, and S. N. Taylor, counsel for defendant.

Counsel for defendant here offers in evidence pages 476, 477, 478 to 480, inclusive, of the 14th edition of Eubank's Hydraulics and Mechanics, by Thomas Eubank, published in 1856 by J. C. Derby, in the city of New York and State of New York, and asks that the same be marked "Defendant's Exhibit No. 24."

Counsel for complainants objects to the introduction of said exhibit in evidence as incompetent, irrelevant, and immaterial to any issue in this case.

Counsel for defendant then offers in evidence pages 52 and 53, volume 1, of Cooley's Encyclopedia of Practical Receipts, revised by Richard D. Tuson and published by D. Appleton & Company, at the city of New York, State of New York, A. D. 1879—the
524 article referred to entitled Air Pump, subheadage Air Pumps, Bunsen's Water and Air Pump, Sprengels, and asks that the same be marked "Defendant's Exhibit No. 25."

Counsel for complainants objects to the introduction of said exhibit in evidence on the ground that it is incompetent, irrelevant, and immaterial to any issue in this case.

SAMUEL KNIGHT, a witness produced and sworn on behalf of the defendant, in answer to interrogatories testified as follows:

Int. 1. State your name, age, residence, and occupation.

A. My name is Samuel Knight; I am a patent solicitor and expert; my age is sixty years; residence, St. Louis.

Int. 2. Please state what knowledge or experience you have had of mechanics generally and how you obtained the same. State fully.

A. I have been acquainted with mechanics ever since I was a boy, and for more than twenty years have been in my present business. In my business for some time, over one year, I think, or about two years—I do not remember—I was engaged in the United States Patent Office in writing epitomies of patents for the patent reports at that time, in which occupation I handled a great number of patents; had to examine them carefully. I examined a large number of specifications of patents of all patentable subjects generally, and I have examined machinery of almost every description and patents in connection with my business as solicitor and expert.

Int. 3. Please state whether you have examined letters
525 patent No. 260,232 of the United States, known as Peters and Donald patent, sued on in this case, and state whether you understand the same.

A. I have examined that patent and understand it fully, I believe.

Int. 4. Please state the operation of a construction made in accordance with that patent.

By Mr. BAKEWELL: I object to that on the ground that the patent itself is the best evidence.

A. I see in the patent a bowl marked *l* and a soil pipe leading therefrom, with two water traps and an air chamber between them. There is a water reservoir and beneath that a flushing chamber, with a tube passing through the partition between them, which is occupied by a piston valve. The side of the tube has an opening or openings below the valve when it is in an elevated position, and above it when it is in its lower portions. The upper end of the tube is open to the reservoir, and the side opening of the tube opens into the flushing chamber. The arrangement is such that when the valve is in its lower position there is communication between the reservoir and the flushing chamber, whereas when it is in its upper position the communication is closed. Connected to the valve by a flexible connection is another valve that closes communication between a flushing chamber and a flushing pipe leading to the bowl; the arrangement of the valves and their flexible connection is such that the upper valve will rise above the side openings in the tube before the lower valve comes to rise, and as the upper valve is lifted above this point the lower valve is opened, so that when the valves are both raised the communication is opened between the flushing chamber and the reservoir. Now, the communication being closed between the reservoir and flushing chamber and opened be-
526 tween the flushing chamber and the flushing pipe, the water will flow through the flushing pipe into the bowl. I have said that the soil pipe has two water traps and between them an air chamber. From the air chamber ascends a pipe which extends above the top of the flushing chamber and is bent down and connects with the upper part of that chamber. As the water runs out of the flushing chamber it creates a suction in this pipe and draws the air from the chamber between the traps. This is a well-known form of aspirator. In this connection I would refer to page 170 of volume

I of Knight's American Mechanical Dictionary, figure 392, under head of Aspirator. Here the common form of aspirator is given, in which the suction is produced in the pipe connected with the top of the water chamber by the escape of water from the lower part of the chamber. The reservoir is supplied with water by a float-valve, and from this valve extends a pipe marked 15, whose lower end discharges into the flushing pipe, so that on a supply of water flowing into the reservoir a certain amount flows also into the flushing pipe. It will be seen when the air is exhausted from the air space between the traps that it will syphon the water in the upper trap and cause it to flow out through the soil pipe into the lower trap, and the purpose of the small pipe leading from the reservoir supply cock to the soil pipe is to furnish water to the bowl after this syphoning process is over. From the pipe marked 5, leading upwards from the air space between the trap, an air-escape pipe, supplied with a check-valve, leads upward to some point of escape as the roof of the building.

Complainants' solicitor objects to that part of the answer of the witness which refers to the means shown in the patent for the exhaustion of the air from the space between the two water
527 traps, and his reference to the page of cuts in Knight's Mechanical Dictionary set forth in his answer, and to the witness designating the means for exhausting the air from between the two water traps in the Peters and Donald patent as an aspirator, as not responsive to the question and as incompetent, irrelevant, and immaterial to any issue in this case.

By Mr. TAYLOR: Mr. Bakewell, you do not deny but that the pages to which Mr. Knight has already referred to of Knight's Mechanical Dictionary is Defendant's Exhibit No. 18, do you?

By Mr. BAKEWELL: No; I admit that what Mr. Knight refers to is shown in Defendant's Exhibit No. 18 in this case, but I have already objected to said exhibit as incompetent, irrelevant, and immaterial, and I object to the answer referred to on the ground that it is not responsive to the question, and for the further reason that the said exhibit and the testimony of this witness regarding the same is not competent, relevant, or material.

Int. 5. Mr. Knight, I now call your attention to Defendant's Exhibit No. 14 and also Defendant's Exhibit No. 14, A, B, C, D, and E, the several exhibits constituting tank, flushing apparatus, flushing pipe, air pipe, lead soil pipe, with trap in it, and bowl, with trap in the bowl, and will ask you whether these several exhibits when set up would constitute a construction made in conformity with the Peters and Donald patent.

By Mr. BAKEWELL: I object to that as incompetent, irrelevant, and immaterial to any issue in this case.

528 A. They seem to me to be substantially in conformity with it. I cannot very well see into the tube containing the piston valve, and I have not attempted to fit the piping to the connec-

tions, but the exhibits seem to me to essentially show the device as found in the patent.

Int. 6. I now call your attention to the Boyle reissue letters patent No. 10826, sued on in this case, and will ask you if you have examined and understand said patent.

A. I have examined and understand this patent.

Int. 7. Please explain the operation of the construction made in accordance with said letters patent, so far as relates to the flushing apparatus and the exhausting of the air from the air space between the two traps, as shown in figure 1 of that patent.

Counsel for complainants object to the question, no foundation having been made for the same, it not appearing that the witness has had any familiarity or any experience whatever with the operation of an apparatus constructed in accordance with the patent referred to in the question; and if the question calls for the answer of the witness touching the method and operation of the particular device illustrated and described in the patent solely from the knowledge of the witness concerning the patent, the question is incompetent, the patent itself, or, rather, the specifications and drawings of the patent itself, being the best evidence in relation to the question.

A. The patent has a reservoir and bowl, a flushing chamber
529 with a valve part for communication between them, closed by a valve marked *h*. The reservoir is normally supplied with water, and the flushing chamber empty. On lifting the valve the water flows from the reservoir into the flushing chamber and down through what is called an injector into the flushing pipe and so to the bowl. The injector, as it is called, has a short pipe or nozzle extending into the chamber, which is in connection with annular passage, with a closed top pipe or bell extending up into the reservoir and down to near the bottom of the flushing chamber. This annular chamber is between a pipe communicating with the chamber surrounding the nozzle of the lower end and a pipe extending from the upper part of the bell to an air chamber between two water traps in the bowl and soil pipe. The injector, as it is called, forms a suction in the chamber which is in connection with the annular passage referred to, as the water passes from the flushing chamber to the flushing pipe and forming a partial vacuum in this chamber and in the annular passage and in the upper part of the bell. A partial vacuum is also formed in the pipe which is lettered *e*, extending from the upper part of the bell to the air chamber between the two water traps. Thus it will be seen that the passage of the water from the flushing chamber will cause an exhaustion of the air in the air chamber or space which is lettered *d* and cause a syphoning of the upper water trap *c*. It will be seen that what is called and injector, *i*, is in fact an aspirator, as it causes the exhaustion of the air and produces a partial vacuum. An injector is strictly an instrument which injects anything into another, and it will be seen that so far from this causing an accelerating movement of the water into the flushing pipe in the degree in which it causes an exhaustion or

partial vacuum of the air it decreases the speed of the current and its injection into the flushing pipe; consequently it is an as-
530 pirator and not an injector properly; and in this connection I will again refer to page 170, Knight's American Mechanical Dictionary, in which, in the same column, figures 392 and 393, are shown the common form of aspirators. In this connection I will also refer to pages 476 and 477 of Eubank's Hydraulic, being Defendant's Exhibit No. 18½. This book was copyrighted in 1842 under the head of Trombe; a figure is found having an aspirator, in which a current of water passes through a pipe and draws in the air through side passages in the side of the pipe. In the exhibit Knight's American Mechanical Dictionary, Defendant's Exhibit No. 18, the two forms of aspirator are shown, one of which is used in the Peters and Donald patent and the other in the Boyle reissue, that I have now in hand. I will ask whether the question intended to refer to other figures besides figure 1.

Int. 8. Yes, sir; you may put in construction as shown by other figures also in the reissue patent of Boyle.

A. Figures 2 and 3 are modified to make the working of the device plainer. I would say, at the close of the exhausting process from the chamber *b* the water falls below the lower end of the bell within the flushing chamber, and so the air is allowed to pass into the flushing chamber and the suction upon the pipe *e* is very much lessened, so that the trap C is not syphoned from this time and the water passing down from this time fills the trap up to its normal level. In figures 4, 5, and 6 the device is more or less modified and the device I have described would not apply to them in the same degree as in relation to figure 1. In figure 6, which is the most unlike, the pipe *e* does not extend up into the flushing chamber but direct to a chamber or passage which is marked *d* and which surrounds the aspirator nozzle.

531 Complainants' solicitor objects to that part of the answer of the witness, both before and after the interrogatory put by the witness to counsel for defendant, which refers to anything but the Boyle reissue patent, particularly that part of the answer which refers to Defendant's Exhibits Nos. 18 and 18½, as not responsive to the question; and, furthermore, on the ground that the said exhibits and any testimony relating to the same are totally irrelevant, incompetent, and immaterial to any issue in this case, and the exemption further extends to that part of the answer which seeks to call the injector of the Boyle reissue patent an aspirator, as irresponsive to the question and as incompetent, irrelevant, and immaterial.

Int. 9. Please state, if you know, what is the technical name by which the sealed chamber in the Peters and Donald patent is known by the mechanics and why it is known by such name.

By Mr. BAKEWELL: I object to that as incompetent, irrelevant, and immaterial, for the reason that no foundation is made for the question, the witness not having qualified to answer such a question as applied to the apparatus described and claimed in the Peters and Donald patent referred to in the question.

A. I understand that the sealed chamber alluded to is what I understand by the name of flushing chamber. I am not able to say whether this is the usual name used by mechanics or not.

Int. 10. In your answer a moment ago you characterized a
532 sealed chamber as an aspirator; please state why, in your opinion, it constitutes a form of aspirator.

By Mr. BAKEWELL: I object to that as leading and as incompetent, irrelevant, and immaterial.

A. The sealed chamber or flushing chamber in the Peters and Donald patent constitutes the exhaustion chamber of the aspirator, for as the water leaves it it establishes a partial vacuum in the pipe 5 and a suction through the pipe, so that the exhaustion chamber and the pipe are both elements of the aspirator.

Int. 11. State whether, in your opinion, a sealed chamber with its connections, as shown in the Peters and Donald patent, constitutes an aspirator.

By Mr. BAKEWELL: I object to that as leading and as incompetent, irrelevant, and immaterial.

A. Yes, sir; I so regard it undoubtedly.

Int. 12. State whether, in your opinion, what is termed the injector with its connections, as shown in the Boyle reissue sued on, constitutes an aspirator, and, if you say it does, give your reasons for your opinion.

Counsel for complainants objected to the question as leading, incompetent, irrelevant, and immaterial.

A. I think it does; it seems to me to have all the elements of the aspirator, which I understand to be a means for causing the entrance of the air by the formation of a partial vacuum. In this case the air is drawn from the "passage-way *s*," passage *t*, and pipe *e* by the passage of water through the outlet orifice *i*, at the bottom of the flushing chamber.

Int. 13. State how and in what manner, if you know, water
533 passing from the flushing chamber F through orifice *i* and down through flushing pipe I into the bowl produces a suction of the air from the space between the two traps and the bowl.

A. It has been long well known that any fluid passing by another causes the movement of the latter fluid, and this accounts for the passage of the water through the orifice *i* and through the passageway *s*, causing the movement of the air within the passageway down through the flushing pipe to take place, and the air leaving the passageway *s* air has to flow in from the passage *t* and to supply the passage *t* from the pipe *e*, which is itself supplied from the air chamber between the traps.

Complainants' counsel objects to that part of the answer of the witness in which he attempts to state what "has long been well known" as not responsive to the question and as incompetent, irrelevant, and immaterial.

Int. 14. Have you anything further to say in answer to the question?

A. The exhaustion of the air from the chamber between the traps will cause the syphoning of the water in the upper trap and cause it to overflow into the soil pipe and into the lower trap, owing to the inner end of the trap having been partially relieved from the pressure of air and the full atmospheric pressure coming on the surface of the water in the bowl.

Int. 15. Mr. Knight, I now call your attention to claim No. 1 of the Boyle reissue patent, which reads thus: "A water-closet consisting of a bowl with soil pipe leading therefrom and two successive traps in said passage in combination with a flushing pipe for conveying water to the bowl; a suction injector arrangement in
534 connection with said pipe, and to be traversed by the flushing water, and an air pipe leading from the air space between said traps, communicating with said injector, substantially as set forth, whereby the flow of water through said injector serves to draw air through said space." I will ask you to state, if you know, what, if any, elements you find in said claim substantially embraced in the Peters and Donald patent sued on. State fully and in detail, giving your reasons for the same.

By Mr. BAKEWELL: I object to that as leading, as incompetent, irrelevant, and immaterial.

A. The said claim and the Peters and Donald patent referred to are both for water-closets. The elements of the claim I will mention and state which of them in my opinion are substantially found in the Peters and Donald patent. The first element of said claim is a bowl which is found in the Peters and Donald patent; the second, a soil pipe, which is also found in the said patent; the next, two successive traps in the soil pipe, which are also found in said patent; the next element in said claim is a flushing pipe, also found in said patent; the next element of said claim is described in the following words: "A suction injector arranged in connection with said pipe, to be traversed by the flushing water," said pipe being the flushing pipe. In the Peters and Donald patent there is what I regard as a full equivalent of the injector mentioned in said claim. My reason for this is that both of them are aspirators and not properly injectors, and both of them very well known forms of aspirators, so that so far I find the same elements substantially in said claim and said patent. The next element in said claim is an air pipe leading from the air space between the two traps in the soil pipe. This element I also find in said patent, and in said patent I also find the air space mentioned in said claim between the
535 two traps of the soil pipe. Said claim closes with the following words relative to the air pipe: "And communicating with said injector, substantially as set forth, whereby the flow of water through said injector serves to draw air from mid air space." It will be seen that the aspirator of said patent consists of an exhaustion chamber and exhaustion pipes leading into it, and the passage of water through the chamber causes the exhaustion of air from the

pipe. Consequently I regard the aspirators and their connections as substantially the same, considering the state of the art. The term "injector," as applied to either of them, I regard as a misnomer.

Int. 16. I now call your attention to claim No. 2 of the Boyle reissue patent sued on in this case, which reads as follows: "A flushing apparatus for water-closets consists of a combination of a reservoir, tank, and flushing valve controlling the outlet thereof, a flushing pipe for conveying water therefrom to the bowl of the closet, a suction injector arranged in connection with said pipe and to be traversed by the descending flushing water, and a suction pipe in connection with said injector, whereby the water in flowing from said tank downward through the flushing pipe traverses said injector and sucks the air from said suction pipe," and I will ask you to state what, if any, element you find in said claim substantially embraced in the Peters and Donald patent sued on. State fully and in detail, giving your reasons for the same.

By Mr. BAKEWELL: I object to that as leading, incompetent, and immaterial.

A. I will answer relative to the said claim 2 in the same manner in which I have relative to the previous claim, taking the elements of the said claim: The said claim is for "a flushing appar-tus for water-closets," having the following elements: First, a reservoir
536 tank. This is found in said patent of Peters and Donald. The next element in said claim is the flushing valve controlling the outlet from the tank. This is also found in said patent. The next element in said claim is a flushing pipe for conveying water therefrom—meaning from the reservoir—to the bowl of the closet. I find in the said Peters and Donald patent a flushing pipe leading from the flushing chamber below the reservoir to the bowl of the closet. The next element of said claim is a suction injector, arranged in connection with said pipe, to be traversed by the descending flushing water, the pipe meant being the flushing pipe. This I find substantially in said patent, for I regard the aspirator of said patent consisting of the suction pipe 5 and the exhaust chamber 6 as substantially the same as the aspirator, which is called the injector in said claim, both being well-known forms of aspirators. The next element of said claim is a suction pipe in connection with said injector. This I find substantially in said patent. The discharging end of the pipe I consider as forming a part of the aspirator the other part being formed by the exhaust chamber, both elements being necessary in forming the device. This includes all the elements in the claim, and they are, in my opinion, found substantially in the Peters and Donald patent referred to.

Int. 17. Please state if you have examined and understand letters patent granted to W. Bunting, Jr., No. 210,003.

A. I have examined and understand this patent.

Int. 18. If you understand you will please describe the method by which the contents of the bowl are syphoned out by the process shown in the patent.

By Mr. BAKEWELL: I object to that on the ground that the patent itself is the best evidence of the method of the operation of the device there illustrated and described, and the witness does not
537 appear to have any knowledge of the practical operation of the device constructed in accordance with the said Bunting patent.

A. There is a water trap at the bottom of the bowl and extending into the bend of the soil pipe, and below this is the check-valve marked *e*, between the check-valve and the trap being the air space connected by a pipe to the lower part of a cylinder, in which works a piston raised by the hand to exhaust the air from the air space *d* between the trap and check-valve *e* and draw the air up into the cylinder. As the piston attains its upper position it infringes against a lever and opens a water cock, discharging water into the bowl. When the handle is again pushed down and the piston slides down the cylinder the air escapes upwards through a check-valve in the piston. It will be seen that the air is discharged from the space between the trap and check-valve *e* by the upward movement of the handle and a supply of fresh water injected into the bowl. The water being discharged from the trap passes down the soil pipe and forces open the check-valve *e*, and escapes down through the lower part of the soil pipe. It will be understood that when the piston is raised in the cylinder a partial vacuum is produced in the air space *d* and the pressure of air upon the surface of the water from the trap to flow over into the soil pipe as aforesaid.

By Mr. TAYLOR: As showing the state of the art I desire to offer in evidence copy of the specifications and drawings of letters patent dated May 15, 1877, to W. Smith and numbered 190,919, and will state that this is not one of the patents specified in the answer,
538 but is one that we have discovered since the answer was filed. I ask that it be made Defendant's Exhibit No. 26.

Complainants' counsel does not object to the said patent on the ground that it is not a certified copy, but complainants' counsel objects to the introduction of said patent in evidence on the ground that it is not set up in the answer, and on the ground that it is incompetent, irrelevant, immaterial to any issue in this case.

Int. 19. Mr. Knight, state if you have examined and understand the letters patent granted to W. Smith, No. 190,919.

A. I have examined and understand this patent.

Int. 20. If you understand, will you please explain that part of the apparatus which is designed to draw foul air? Explain it fully.

By Mr. BAKEWELL: I object to that as incompetent, irrelevant, and immaterial, the witness showing no practical knowledge of the construction of the method of operation of the device described and shown in the patent referred to, and for the further reason that the patent itself is the best evidence of the construction and method of operation of the device described and illustrated in it.

A. There is a pipe leading from the bowl into a vessel having at

pipe. Consequently I regard the aspirators and their connections as substantially the same, considering the state of the art. The term "injector," as applied to either of them, I regard as a misnomer.

Int. 16. I now call your attention to claim No. 2 of the Boyle reissue patent sued on in this case, which reads as follows: "A flushing apparatus for water-closets consists of a combination of a reservoir, tank, and flushing valve controlling the outlet thereof, a flushing pipe for conveying water therefrom to the bowl of the closet, a suction injector arranged in connection with said pipe and to be traversed by the descending flushing water, and a suction pipe in connection with said injector, whereby the water in flowing from said tank downward through the flushing pipe traverses said injector and sucks the air from said suction pipe," and I will ask you to state what, if any, element you find in said claim substantially embraced in the Peters and Donald patent sued on. State fully and in detail, giving your reasons for the same.

By Mr. BAKEWELL: I object to that as leading, incompetent, and immaterial.

A. I will answer relative to the said claim 2 in the same manner in which I have relative to the previous claim, taking the elements of the said claim: The said claim is for "a flushing appar-tus for water-closets," having the following elements: First, a reservoir
536 tank. This is found in said patent of Peters and Donald. The next element in said claim is the flushing valve controlling the outlet from the tank. This is also found in said patent. The next element in said claim is a flushing pipe for conveying water therefrom—meaning from the reservoir—to the bowl of the closet. I find in the said Peters and Donald patent a flushing pipe leading from the flushing chamber below the reservoir to the bowl of the closet. The next element of said claim is a suction injector, arranged in connection with said pipe, to be traversed by the descending flushing water, the pipe meant being the flushing pipe. This I find substantially in said patent, for I regard the aspirator of said patent consisting of the suction pipe 5 and the exhaust chamber 6 as substantially the same as the aspirator, which is called the injector in said claim, both being well-known forms of aspirators. The next element of said claim is a suction pipe in connection with said injector. This I find substantially in said patent. The discharging end of the pipe I consider as forming a part of the aspirator the other part being formed by the exhaust chamber, both elements being necessary in forming the device. This includes all the elements in the claim, and they are, in my opinion, found substantially in the Peters and Donald patent referred to.

Int. 17. Please state if you have examined and understand letters patent granted to W. Bunting, Jr., No. 210,003.

A. I have examined and understand this patent.

Int. 18. If you understand you will please describe the method by which the contents of the bowl are syphoned out by the process shown in the patent.

By Mr. BAKEWELL: I object to that on the ground that the patent itself is the best evidence of the method of the operation of the device there illustrated and described, and the witness does not
537 appear to have any knowledge of the practical operation of the device constructed in accordance with the said Bunting patent.

A. There is a water trap at the bottom of the bowl and extending into the bend of the soil pipe, and below this is the check-valve marked *e*, between the check-valve and the trap being the air space connected by a pipe to the lower part of a cylinder, in which works a piston raised by the hand to exhaust the air from the air space *d* between the trap and check-valve *e* and draw the air up into the cylinder. As the piston attains its upper position it infringes against a lever and opens a water cock, discharging water into the bowl. When the handle is again pushed down and the piston slides down the cylinder the air escapes upwards through a check-valve in the piston. It will be seen that the air is discharged from the space between the trap and check-valve *e* by the upward movement of the handle and a supply of fresh water injected into the bowl. The water being discharged from the trap passes down the soil pipe and forces open the check-valve *e*, and escapes down through the lower part of the soil pipe. It will be understood that when the piston is raised in the cylinder a partial vacuum is produced in the air space *d* and the pressure of air upon the surface of the water from the trap to flow over into the soil pipe as aforesaid.

By Mr. TAYLOR: As showing the state of the art I desire to offer in evidence copy of the specifications and drawings of letters patent dated May 15, 1877, to W. Smith and numbered 190,919, and will state that this is not one of the patents specified in the answer,
538 but is one that we have discovered since the answer was filed. I ask that it be made Defendant's Exhibit No. 26.

Complainants' counsel does not object to the said patent on the ground that it is not a certified copy, but complainants' counsel objects to the introduction of said patent in evidence on the ground that it is not set up in the answer, and on the ground that it is incompetent, irrelevant, immaterial to any issue in this case.

Int. 19. Mr. Knight, state if you have examined and understand the letters patent granted to W. Smith, No. 190,919.

A. I have examined and understand this patent.

Int. 20. If you understand, will you please explain that part of the apparatus which is designed to draw foul air? Explain it fully.

By Mr. BAKEWELL: I object to that as incompetent, irrelevant, and immaterial, the witness showing no practical knowledge of the construction of the method of operation of the device described and shown in the patent referred to, and for the further reason that the patent itself is the best evidence of the construction and method of operation of the device described and illustrated in it.

A. There is a pipe leading from the bowl into a vessel having at

its upper end a water-supply valve and a perforated diaphragm through which the water passes when the valve is open. The water descends through the perforations of the diaphragm and falls through the body air in the vessel, carrying it downward and out through a discharge pipe G, the water escaping from the bottom of the vessel. The drops or streams of water passing through
539 the vessel A causes the downward movement of the air as aforesaid, and causes a partial vacuum in the upper part of the chamber and in the pipe B leading to the bowl; the air in the bowl rushes in the pipe to supply the partial vacuum, and so it is exhausted from the bowl. Thus the instrument constitutes an aspirator, drawing the air from the bowl.

Counsel for complainants objects to the last statement of the witness, in which he calls the device which he has described "an aspirator," inasmuch as this statement contradicts the terms used in the patent itself as applicable to the device in question.

Int. 21. Compare that patent with the construction which is called the injector in the Boyle reissue patent sued on. Please state what, if any, resemblance there is between the two.

Counsel for complainants objected to the question as incompetent, irrelevant, and immaterial to any issue in this case.

A. I find that both of them have an aspirator drawing foul air from the region of the bowl—the Smith patented device drawing it from the bowl itself and the Boyle patented device drawing it from the air chamber, separated from the bowl by a trap discharging into the chamber when syphoned.

The meeting was here adjourned until two o'clock p. m.

At two o'clock p. m. the further hearing of this witness progressed as follows:

Counsel for defendant here produced and offered in evidence Patent Office copy of letters patent No. 261,155, issued to W. L. Horne July 18, 1882, and asked that the same be marked
540 Defendant's Exhibit No. 27. This patent is offered as showing the state of the art.

Solicitor for complainants objected to the introduction of said patent to Horne in evidence on the ground that it is not set up in the answer in this case and complainant had had no notice of the same; and, further, complainant objected to the introduction of said exhibit in evidence as incompetent, irrelevant, and immaterial to any issue in this case.

Int. 22. Please state if you have examined and understand the patent granted to W. L. Horne, No. 261,155, which is offered in evidence.

A. I have examined this patent and understand it.

Int. 23. Now, compare that patent with what is called the injector in the Boyle reissue patent sued on and state how the injector shown therein, particularly with reference to the sucking of air, corresponds

with the apparatus shown in this patent for sucking air from the bowl.

By Mr. BAKEWELL: I object to that as incompetent, irrelevant, and immaterial to any issue in this case.

A. I find in this patent of Horne's a device for exhausting air from the bowl by means of a jet of water in proximity to one end of the air-exhaust pipe, the other end communicating with the bowl. In this patent the air is exhausted from the bowl itself, and in the Boyle reissue cited the air is exhausted from the chamber, separated from the bowl by a water trap discharged into the chamber, so that in both cases an aspirator or, in other words, a device is used to exhaust air from the bowl or its neighborhood.

541 Int. 24. I now call your attention to Defendant's Exhibit No. 19, which is a copy from pages 11 and 12 of Chambers' Encyclopædia, and I call your attention particularly to the figure under the head of jet pump and will ask you to state whether you have examined and understand said exhibit.

By Mr. BAKEWELL: I object to that as incompetent, irrelevant, and immaterial.

A. I have examined and understand that exhibit.

Int. 25. Comparing that exhibit with the construction of what is called the injector described in the Boyle reissue patent sued on, please state what, if any, resemblance there is between the two.

By Mr. BAKEWELL: I object to that as incompetent, irrelevant, and immaterial; as incompetent to said exhibit and the Boyle reissue patent referred to, it being the best evidence for what it respectively contains, and any similarity, if any there be, existing between them, and it is further objected to as incompetent, irrelevant, and immaterial to any issue in this case.

A. I find a very marked resemblance between the two. In the exhibit the water giving the motive force descends through a pipe ending in the chamber with whose side the suction pipe communicates. The partial vacuum produced in the chamber by the passage of the water through it into a pipe beneath produces a suction in the suction pipe and draws through it any fluid contained in the suction pipe, discharging it with the water through the pipe. In the said reissue patent of Boyle the parts are substantially the same as this one and produce the same effect.

Int. 26. For how many years, to your knowledge, have as-
542 pirators, such as is shown in Defendant's Exhibit No. 19 which you have just described, been well known to the public in this country?

By Mr. BAKEWELL: I object to that as incompetent, irrelevant, and immaterial, and as calling for the testimony of the witness as to the prior use of the device exhibited in the said exhibit, when the witness has not been named in the answer as a person who will testify as to the prior use of the device referred to in the question or

of any other device, and the question is furthermore objected to as incompetent, irrelevant, and immaterial to any issue in this case.

A. I could not answer that question definitely. It seems to me as a matter of common knowledge which I have acquired. I could not say how long.

Int. 27. State approximately.

A. Well, probably twenty years or more.

Int. 28. Please state if you have examined and understand Defendant's Exhibit No. 20, being the exact copy of pages 259 and 260 of volume 1, 7th edition, of Ure's Dictionary of Arts, Manufactures, and Mines, published in the United States in 1875.

A. Yes, sir; I have examined that and am acquainted with the action of it and understand it.

Int. 29. Compare that exhibit with the construction shown and described in the Boyle reissue patent sued on, so far as what is called the injector principle is concerned, and please state what, if any, resemblance there is between the two.

By Mr. BAKEWELL: I object to that as incompetent, irrelevant, and immaterial, and the comparison is further objected to on the
543 ground that the patents referred to in the question are the best evidence of what they respectively show and of their respective similarity or dissimilarity, and objected to as incompetent, irrelevant, and immaterial.

A. I find a very marked resemblance between them, both having a water pipe descending into a chamber into whose sides a suction pipe enters and a discharge pipe proceeding from the chamber, and in both cases the descending water acting to suck air through the air pipes, whose end communicates with the inside of the chamber.

Int. 30. Please examine Defendant's Exhibit No. 22, which I now hand you, and state by what name it should be designated.

By Mr. BAKEWELL: Objected to as immaterial.

A. I should call it an aspirator. There is nothing to indicate what position it should be placed in, but it would act in any position if the fluid was passed into the larger end.

Int. 31. If this Exhibit No. 22 was attached with its larger end upward to a tank filled with water, and the branch at the side was attached to a pipe, which pipe at its other end extended into a fluid and then water was permitted to flow down from the tank through the flushing pipe, what effect would that have at the extreme end of the pipe which we have supposed to have been inserted in the fluid?

By Mr. BAKER: Objected to as incompetent, irrelevant, and immaterial.

A. It would establish a suction on that fluid. If the pipe did not descend below a certain distance it would suck up water through a pipe; it is a question of proportion. Water is raised in suction by

a pressure of the air upon the surface, and consequently
544 cannot be raised much over thirty feet by a perfect vacuum. The amount of suction produced would, of course, fall short of a perfect vacuum, so that no definite answer can be given.

Int. 32. As to what?

A. As to the height the falling water would lift the water in the branch pipe.

Int. 33. Now, please state whether the aspirator marked Defendant's Exhibit No. 22 is constructed in accordance with the aspirator described in Defendant's Exhibit No. 20.

By Mr. BAKEWELL: I object to that as incompetent, irrelevant, and immaterial, and as calling for secondary evicence, the exhibits referred to in the question being the best evidence.

A. Yes, sir; they are the same in principle.

Int. 34. Please state if you have examined and understand Defendant's Exhibit No. 25, it being a true copy of pages 52 and 53 of Cooley's Encyclopædia of Practical Receipts, published in New York, 1879.

By Mr. BAKEWELL: I object to that as incompetent, irrelevant, and immaterial.

A. I have examined and am acquainted with the exhibit.

Int. 35. Compare that exhibit and the figures therein shown with the construction shown and described in the Boyle reissue patent sued on, so far as the aspirator or injector is concerned, in the Boyle reissue patent; you will please state what, if any, resemblences there are between the two.

By Mr. BAKEWELL: I object to that as incompetent, irrelevant, and immaterial, and as calling for secondary evidence, said
545 patent in the said exhibits speaking for themselves and being the best evidence of what they respectively contain or of what, if any, similarity there may be between them.

A. In the cut marked "Bunson's water air pump" I find a suction pipe for air descending into a chamber receiving liquid from its side, which, dropping through the chamber into a pipe below, carries the air with it, so that I find the same principle here involved that is involved in the aspirator of the Boyle reissue patent cited in the question. In the cut marked "Sprengel's air pump" I find a descending stream of water passing through the pipe, with whose sides communicates an inclined suction pipe, so that the descending water will draw the contents from the suction pipe. The same principle is here involved that is found in the said reissue patent of Boyle.

Int. 36. Calling your attention to the figure in Exhibit No. 25, which is marked "Sprengel's air pump," I will ask you to state at what place the reservoir of water is situated, as shown in that figure, and from what space the air or other liquid in the descent of water is supposed to be drawn in the operation of that apparatus.

By Mr. BAKEWELL: Objected to as incompetent, irrelevent, and

immaterial, and as calling for secondary evidence, the exhibit being the best evidence.

A. The reservoir is in a funnel, supported at the top of the pipe, and the liquid (mercury) descends through a pipe into a receiver or flask, from which it is returned to the funnel, if required to be used over again. The air or other fluid spoken of is exhausted from the receiver or chamber marked *r*.

Int. 37. Please state whether it was known as early as
546 1880, by those skilled in the art of constructing aspirators, that said forms of aspirators, as described in Defendant's Exhibits No. 18, 18½, 19, and 25, to which you have referred, could be substituted for a vacuum chamber, such as is shown in the Peters and Donald patent, and which could be used for the like purpose of creating a partial vacuum in the confined air space, such as is shown between the two traps of the Peters and Donald bowl.

By Mr. BAKEWELL: I object to that as leading, as incompetent, irrelevant, and immaterial; as attempting by a mere hypothesis to have the witness contradict the facts as disclosed by this record.

A. Yes, sir; these devices shown in those exhibits were well-known means at that time of producing the result described.

Int. 38. Now, state whether or not, in your opinion, a mechanic, as early as 1880, who, having the Peters and Donald patent before him and understanding it and the drawings thereof, would have had immediately suggested to his mind, if acquainted with the forms of aspirators shown in Defendant's Exhibits Nos. 18, 18½, 20, and 25—that is, any of these common forms of aspirators—and could have readily substituted one of these to perform the function of the sealed chamber in the Peters and Donald construction, so far as the same is used to create a partial vacuum between the traps in the soil pipe, for the purpose of syphoning the contents of the bowl.

By Mr. BAKEWELL: I object to the question as leading, as incompetent, immaterial, and irrelevant; as asking the witness to determine a question of law the court should determine; as attempting through the mouth of this witness to contradict, by a naked
547 hypothesis, the facts as disclosed by the record in this case.

A. I think that he would have had that suggestion made to his mind if he desired to provide another means of carrying out the object. I think it would appear a very natural suggestion by examining Exhibit No. 18, where the two forms of the aspirator are shown in the same column. I am not prepared to say that any mechanic seeing the device would at once think of some other way of doing it, but if he desired to do it and without using precisely the form found in the patent of Peters and Donald he would very naturally take the other one of them, and without the exercise of any ingenuity, it seems to me.

Int. 39. Mr. Knight, please state whether or not, in your opinion, the substitution of the form of aspirator, or, as Boyle calls it, the "injector," in his reissue patent, in lieu of the sealed chamber shown in the Peters and Donald patent is or is not a mere substitution of

a well-known mechanical equivalent to perform the same thing (so far as syphoning the bowl is concerned) in substantially the same way. If you should say it is, explain why it is.

By Mr. BAKEWELL: I object to that as leading, as incompetent, irrelevant, and immaterial; as asking the witness to determine a question of law exclusively within the province of the court.

A. I regard it as a well-known mechanical equivalent, because it is a device well known to the art for performing the operation and in substantially the same manner.

Int. 40. State whether or not, in your opinion, as the art stood in 1880, a mechanic, familiar with the forms of aspirators of which you have spoken, and having before him the Peters and
548 Donald patent, but desiring to dispense with the sealed chamber, would have had suggested to his mind at once one of these common forms of aspirators as a method of exhausting the air between the air traps and the soil pipe by the falling of water through the flushing pipe.

By Mr. BAKEWELL: I object to that as leading, as incompetent, irrelevant, and immaterial; as asking the witness to determine a question of law solely within the province of the court, as attempting through the mouth of this witness by a mere hypothesis to contradict the facts as disclosed by this record.

A. It seems to me he would have undoubtedly had one or more of these devices suggested to his mind in that contingency.

Int. 41. State whether, in your opinion, it required anything more than moderate mechanical skill to place the aspirator or injector, as shown in the Boyle reissue patent, in the place where shown to perform the function of the sealed chamber, shown in the Peters and Donald patent, so far as syphoning the bowl is concerned.

By Mr. BAKEWELL: Objected to as leading, as incompetent, irrelevant, and immaterial, and as asking for the opinion of the witness as to a matter of law solely within the province of the court.

A. No, sir; I do not think it would require more than moderate mechanical skill, for I do not see how it could be put in anywhere else. It must necessarily have been put below the level of the water in the reservoir, so that the water in the reservoir would flow through it.

Int. 42. State whether, in your opinion, it required any-
549 thing other than ordinary mechanical skill to place a valve at the top of a flushing pipe to regulate the flow of water from the reservoir down the flushing pipe.

Mr. BAKEWELL: Last objection here repeated.

A. No, sir; I do not think it did.

Int. 43. Inasmuch as the Peters and Donald patent was old, and inasmuch as the forms of aspirators which you have spoken of as shown in defendant's exhibits were old, state whether or not, in your opin-

ion, it required anything more than very ordinary mechanical skill to form the combination claim in the first claim of the Boyle reissue sued on in this case.

By Mr. BAKEWELL: Objected to as leading, as incompetent, irrelevant, and immaterial and as calling for a conclusion of the witness as to a question of law solely within the province of the court.

A. I do not think it required more than very ordinary mechanical skill to get up that combination, these points being known, for it is obvious that the bowl and the soil pipe leading therefrom to successive traps in said passage, the flushing pipe for conveying water to the bowl was found in the Peters and Donald patent. The suction injector, as it is called, arranged in connection with the flushing pipe and to be traversed by the flushing water, were not found in the Peters and Donald patent in the form described; but, as I have before stated, considering the state of the art, I think that a full mechanical equivalent was found in the Peters and Donald patent. The other element of the claim, the suction air pipe, leading from the air space between the two traps, was found in the Peters and Donald patent, and connected with what I have stated I con-
550 sidered to be a clear equivalent of what is called the injector in the Boyle reissue patent, and for this reason I think it would not require more than merely ordinary mechanical skill to have arranged the combination by a person having knowledge of the Peters and Donald patent.

Int. 44. Please state (having implied the state of the art, as you have already explained) whether as early as 1880 it would require anything more than ordinary mechanical skill to have made the combination claimed in the second claim of the Boyle reissue patent.

By Mr. BAKEWELL: Last objection here repeated.

A. I think it would have required nothing more than ordinary mechanical skill to have prepared that combination, for this reason: The Peters and Donald patent had a flushing apparatus for water-closets in which was found a reservoir tank, flushing valve, controlling the outlet thereof, a flushing pipe for conveying water to the bowl of the closet, which did not, indeed, communicate direct with the reservoir, but which communicated with the suction chamber directly in communication with the reservoir, the equivalent of the suction injector in connection with said pipe and which was traversed by the descending water and a suction pipe in connection with the aspirator, which I regard as equivalent to said injector, whereby the water in flowing from said tank downward through the flushing pipe traverses said injector. This I regard as unimportant in this connection, the two aspirators being, as I regard it, fully equivalent to each other.

Cross-examination by PAUL BAKEWELL, Esq.:

Int. 1. What practical experience, if any, have you had with pneumatic water-closets?

A. I do not know that I have had any.

551 Int. 2. What practical experience have you had with water-closets, such as those described and illustrated in the Peters and Donald patent referred to in your direct examination and in the Boyle reissue patent referred to in your direct examination?

A. I have probably had practical experience, but not to my certain knowledge. I have not examined the formation of any of the apparatus that I have seen in use, which would enable me to be sure that they were of that construction, which is what I meant by not having any practical knowledge of them, to a certainty.

SAMUEL KNIGHT.

Subscribed and sworn to before me by Samuel Knight this July 3, 1888.

[SEAL.] GEORGE M. BLOCK,
Special Examiner and Notary Public.

By consent of parties, plaintiff and defendant, the further taking of these depositions now continued until the 17th day of July, 1888, then to be pursued pursuant to this stipulation.

[SEAL.] GEORGE M. BLOCK,
Special Examiner and Notary Public.

Pursuant to adjournment, the further taking of testimony on behalf of the defendant in the above-entitled cause was continued at the office of Taylor & Pollard, at the northeast corner of Broadway and Locust street, in the city of St. Louis, on the 17th day of July, 1888.

Present: Paul Bakewell, Esq., solicitor for complainants, and S. N. Taylor, Esq., and B. F. Rex, Esq., solicitors for defendant.

HENRY FLAD, a witness produced and sworn on behalf of defendant, testifies as follows:

552 Direct examination by S. N. TAYLOR, Esq., solicitor for defendant:

Int. 1. State your name, age, residence, and occupation.

A. Henry Flad; sixty-four years; St. Louis; civil engineer.

Int. 2. State what knowledge you have of mechanics and hydraulics generally and how you obtained the same; be full and explicit.

A. I was regularly educated as a civil engineer, and, of course, hydraulics was one of the studies, in the Polytechnic School and University of Munich, and afterwards I was engaged in Germany, as civil engineer in river improvements, and while so employed made a special study of hydraulics. Afterwards, in the United States, I made several improvements in hydraulic machinery. I took out three patents for hydraulic elevators, a patent for a velocimeter, an instrument for ascertaining the velocity of water in pipes, also a patent for a deep-sea-sounding instrument, and several others. I have been a member of the board of water commissioners for eight years and for the last eleven years president of the board of public improvements of St. Louis.

Int. 3. State whether you have examined letters patent 260,232 of Peters and Donald sued on in this case and whether you understand the same.

A. I have examined it and I think I understand it.

Int. 4. Please state what, in your opinion, is the construction described in said patent as claimed in the first three claims of said patent.

Complainants' solicitor objects to the question as incompetent, irrelevant, and immaterial, the patent itself being the best evidence.

553 A. It is a water-closet which is provided with bowl 1 and two traps, 2 and 3, and there is an air space, 4, between the two traps. There is an arrangement by which the air can be drawn from that air space between the two traps so as to cause the water from the upper trap to be discharged into the lower one. To effect this the pipe 5 starts from the upper part of the air space 4 and passes into the closed chamber 6; that chamber is full of water. The water is admitted in the first place through a ball cock into the chamber 7, and from there, when the part C is open, enters through the small cylinder 11*a* into the lower chamber through the opening *c*. When the upper chamber No. 7 is full the ball 12 rises and closes the valve 13. This drawing shows the arrangement as it stands before the closet is operated or in the ordinary position of the valves. When it is to be operated (when anybody uses the closet) the soil is discharged into the bowl 1 and into the trap 2; then the person using the closet pulls the cord; there is no number to the cord. That operates on the lever 10, and in that way pulls up the valve 11 above the opening *c* in the cylinder 11*a*. Pulling up this valve shuts off the connection between the water in the vessels 7 and 6, and immediately after the chain 9, which starts from the bottom, when it is stretched out pulls up the valve 8. When this valve 8 is opened the water from the closet chamber 6 will be discharged through the pipe 14 into the upper part of the bowl. At the same time, since the connection of chamber 6 with chamber 7 within the cylinder 11*a* is shut off, no water or air can get into chamber 6, and a vacuum will be created in the upper part (or a partial vacuum will be created in the upper part) of chamber 6. This vacuum exerts its influence on pipe 5, the lower end of which is connected with the air space 4 and withdraws the air from it, more or less. This causes the water and soil in the bowl 1 and trap 2 to flush
554 over through the air space into the lower trap 3. At the same time the water is running in from pipe 14 into the bowl and washes it out and refills the trap 2. When the cord is let loose valve 8 drops into its seat and valve 11 descends below the opening *c* in the cylinder and opens the connections between chambers 6 and 7. The water from chamber 7 will run through *c* into chamber 6 and will refill it. The water having been partly discharged from chamber 7, the ball cock has descended, of course, and opened cock 13. This cock is in connection with a hydrant or supply pipe, and part of the water discharged through the cock passes into chamber 7, and the water so let in gradually raises the float 12; another part of it passes

through pipe 15 into pipe 14. When the water in chamber 6 has come to the proper elevation or when enough water has come in to raise the *h*all-cock valve sufficiently cock 13 is closed. At this time there is slightly compressed air in the air space 4 and in pipe 5. To allow that to escape there is the pipe 16 starting from the top of pipe 5 with a check-valve in it which prevents air from the outside passing into the pipe 5 while the suction is on, but when the air in 4 and 5 is under some pressure the valve is raised and part of the air escapes above the roof through pipe 16.

Int. 5. Please look at Defendant's Exhibit 14 now shown you and the parts intended to go therewith, marked 14*a*, 14*b*, 14*c*, 14*d*, and 14*e*, and state whether, in your opinion, this when set up would constitute such a water-closet as described in the first three claims of said patent.

A. Yes, sir; I recognize these parts here as the ball valve Here is the part that allows the water to enter pipe 15. These are openings by which the connection is made between the two chambers. I see a bowl there and the trap.

555 Int. 6. State whether, in your opinion, said water-closet when set up would be an efficient construction from a sanitary view, and give your reasons for such an opinion as you may have.

A. I think it is a most excellent closet, because it allows only a certain amount of water to enter, and because it sucks out and removes the contents of bowl 1 and trap 2 by vacuum, and because at no time any part of the air that might be foul could enter the room, there being a provision for all the foul air that possibly might get in anywhere to go out at the roof.

Int. 7. State whether, in your opinion and from your knowledge of closets and hydraulics, such a construction would operate well in use.

A. I should think it would; if made in proper proportions, I am certain of it.

Int. 8. State whether you have examined and understand reissued letters patent 10826 to James E. Boyle involved in this suit.

A. I have examined it and understand it.

Int. 9. Now, please state what, in your opinion, is the construction described in the first two claims of said patent.

Complainants' solicitor objects to the question as incompetent, irrelevant, and immaterial, the patent itself and the claims referred to being the best evidence.

A. Well, it is a water-closet with basin A and traps C and D and an air space B between the two traps. It also has a tank E, which is filled with water by means of a ball cock which is not numbered, and a vessel F below the tank E.

Int. 10. Let me call your attention to one thing. You are following the drawing and have omitted to notice what I asked. (Int. 9 repeated.)

556 A. There is a flushing pipe "*e*" passing from the air space B up above the surface of the water in tank E. There is an

aspirator or injector "I" arranged in connection with the pipe "*e*" so that it can draw the air or suck the air from the pipe "*e*" and from the air space B. There is no flushing valve "*h*" in the bottom of the reservoir tank E so that when the valve "*h*" is raised by means of the cord *q* the water from the reservoir tank can fall on the bottom of the reservoir F and, entering the suction injector *i*, sucks in part of the air from pipe 5, takes it over into *l* and A, and exhausts it from B and from the pipe *e*. I think that is about all that is contained in these two claims. Of course, I do not explain all the parts here just how the thing operates; I suppose that may be done afterwards.

Int. 11. State, if you know, what aspirators are; and, if you do, explain the principle upon which they operate.

Complainants' solicitor objects to the question as incompetent, irrelevant, and immaterial.

A. Aspirators are instruments for exhausting air from closed vessels. That may be done by having a vessel brought in connection through a pipe in with another vessel filled — water and allowing that water to escape from the latter, which, of course, will create a vacuum in the vessel and there will be suction on the other vessel, or it may be done by forcing air, water, or steam through a small opening in the center of an outside pipe so as to create suction. Air, water, and steam in passing under pressure through a small opening gets a great velocity and carries along with it the air by which it is surrounded, and therefore creates a partial vacuum. That, I think, would be about the general description of aspirators.

557 Int. 12. I now call your attention to Defendant's Exhibit No. 13, being letters patent 105,053, dated July 5, 1870, and issued to J. B. Eads, and you will state whether you have read and understand the same.

Complainants' solicitor objects to any testimony regarding this exhibit and to the question propounded to the witness as incompetent, irrelevant, and immaterial to any issue in this case.

A. I will say that Captain Eads invented that pump and I was the first man to use it, so I ought to know something about it.

Int. 13. Do you understand it, that is the question?

A. I do.

Int. 14. Please state what, in your opinion, is the construction described in said patent and the principle of its operation.

A. The sand pump, as it was called, was to be used for pumping sand from the bottom of the river and elevating it to some height above the surface of the water. There is a pipe, B, through which the water was pumped by pumps placed on boats. This annular space E is formed by putting an annular ring, A, outside of pipe B and fastening it to the pipe C. To the bottom of the annular ring A is affixed a vertical mouth-piece, F, which in its upper part very closely approaches to the walls of the inside pipe C and leaves but a very small annular opening for the water to pass through. When

the pumps are set to work the water fills the annular space D, and by the bottom E is deflected upward; it then passes upward along the upright pipe F and enters pipe C. The water has a very great velocity in doing this and in passing up pipe C takes along some of the air in pipes F and C, which, mixed with the water, is carried up and creates a partial vacuum in pipe F. If another pipe is
558 screwed on in prolongation of F, this pipe is gradually exhausted of air, and the water will rise in F and be carried, together with the water that has entered through pipe E, up into pipe C. In my first experiments I placed a pipe below pipe F and covered the mouth of that pipe with a board lined with India rubber, made a hole in that and inserted a manometer in it so as to see what suction was caused by the current of water passing from B to E and into C, and I found that I got twenty-eight inches of vacuum. We never used it for the suction of air afterwards. We used it for pumping water and sand. That experiment proves it could be used for exhausting air from a closed vessel.

Int. 15. Please look at Defendant's Exhibit No. 17, and, if you know, state what it is and the principle upon which it operates when applied in use.

A. Well, of course I know what it would do. Water passing through the large pipe and through the small opening inside of that pipe will create a suction in the pipe connected at right angles with it.

Int. 16. You have only answered part of my last question. What is the name of the device shown in Defendant's Exhibit 17?

Complainants' solicitor objects to any testimony concerning what the exhibit is as incompetent, irrelevant, and immaterial.

A. I suppose it would be called an aspirator. The apparatus would act as an aspirator.

Int. 17. I now call your attention to a like device at the bottom of the tank designated as Complainants' Exhibit Defendant's Tank, and will ask you the name of said brass device at the bottom of said tank, and its office and function.

Complainants' solicitor objects to the question as incompetent, irrelevant, and immaterial.

559 A. When the water is allowed to enter tank F, which has connections with the outside air through pipes F and *f*, a part of it will accumulate on the bottom of the tank F until it covers the mouth of the pipe *n*. Some of the water will pass through the opening *i*.

Int. 18. Look at the inside of it.

Mr. REX: The air pipe does not go above the tank. That part inside is simply the valve.

The WITNESS: Let me look at the patent.

By Mr. TAYLOR:

Int. 19. The patent does not describe it?

A. The exhaust would not go into full operation until the bottom

of pipe *n* is covered. That is what I meant. As soon as the upper valve, *h*, is opened the water will descend to the bottom of vessel F, will run through the aspirator *i*, and suck the air from the pipe which at right angles starts from the aspirator.

Int. 20. You had not examined Complainants' Exhibit Defendant's Tank when I asked the question and you were interrupied in your answer. I will now repeat the question again (repeating Int. 17).

A. That is an aspirator which is to draw, when water passes through it, the air from the pipes which is fastened at right angles to the aspirator.

Int. 21. I now call your attention to Defendant's Exhibit No. 22, and, if you know, please state what it is and the principle upon which it operates when applied in use.

Complainants' solicitor objects to the question as incompetent, irrelevant, and immaterial.

A. If there was a reservoir above the large mouth of the
560 pipe filled with water and the water was allowed to pass through the central opening in the pipe right straight out it would create a partial vacuum in the pipe which enters it at right angles, as the water would draw along with it some of the air.

Int. 22. Now, supposing Exhibit 22 is connected with a tank filled with water, and suppose the branch connection on this device had a pipe screwed upon it, which pipe at its farther end was connected with the confined air space, and suppose water was permitted to flow from the tank down through the larger end of this device, what effect would that have upon the pipe connected with the supposed confined air space?

Complainants' solicitor objects to the question as incompetent, irrelevant, and immaterial to any issue in the case.

A. If the water passed through the lower part of pipe *v* with the necessary velocity it would suck in some of the air from the pipe and gradually create a partial vacuum in the closed vessel.

Int. 23. Please examine Defendant's Exhibit 18, and especially figures 392 and 393 of said exhibit, and state whether you understand the same.

A. I understand figures 392 and 393.

Int. 24. State, if you know, the proper mechanical name of the devices shown by said figures and the principle of their operation when in use.

Same objection.

A. They are used for exhausting air and probably would be called aspirators. In the first device the air is exhausted from a closed vessel by allowing the water to escape from another vessel with which the first vessel is connected, so forming a vacuum in the upper part of the vessel which contains the water. This will create a suction on the vessel filled with air and create a partial
561 vacuum in it. The other instrument, 393, is a closed vessel

through which passes a pipe to within a short distance from the bottom of the vessel. Into the vessel some distance below its top enters another pipe through which the air is to be exhausted. When the water passes with great velocity through the central pipe and out at the bottom of the closed vessel it carries along some of the air in the closed vessel and thereby exhausts the air from the inclined pipe and from any vessel that is connected with the latter.

Int. 25. Look at Defendant's Exhibit No. 19 and state whether you have examined and understand the same.

A. I have examined it and understand it.

Int. 26. Please explain the operation of the jet pump shown in said exhibit.

Same objection.

A. There is an elevated reservoir, 8, containing water. From its bottom starts a pipe, A, which is slightly enlarged inside of the bottom of the reservoir to prevent the contraction of the stream when the water passes into the pipe. At the lower end of pipe A there is a conical nozzle, and the water passing through that conical nozzle gets a greater velocity near the mouth. The nozzle is contained in another intermediate closed vessel, and a pipe passes from its lower end. From the side of the intermediate vessel a curved pipe starts to a tank of water, C, and its mouth is below the surface of that water. When the water passes from the upper reservoir through the pipe A and into the pipe fastened to the bottom of the intermediate vessel surrounding the nozzle *e* it creates a partial vacuum in the intermediate vessel C. This causes the water from the tank C to rise in the pipe and to enter the intermediate vessel C.

562 Thence it is carried along with the water which is discharged from the upper reservoir through the lower pipe attached to the intermediate vessel into the reservoir D. In this way water is raised from the reservoir C into the reservoir D by means of an aspirator placed in the intermediate vessel connected with the upper reservoir.

Int. 27. Look at Defendant's Exhibit No. 20 and state whether you understand the same and the operation of the devices shown in said exhibit; and, if you do, explain such operation briefly.

Same objection.

A. There is a closed vessel, B, and the bottom is covered with some fluid—probably mercury; I cannot say from this. Into this fluid a tube is immersed, which passes from the top of the vessel B to a funnel-shaped vessel, A, some distance above the vessel B. From some point below the vessel A the *the* pipe *x* passes to a spherical vessel, the only pipe from what I see here. I have not examined it.

Int. 28. That is a mercury pump.

A. In passing by the pipe *x* and falling down through the tube it creates a suction in the pipe *x* and exhausts the air from R.

Int. 29. Please look at Defendant's Exhibit No. 25 and state whether you understand the same and the operation of the device

shown in said exhibit; and, if you do, explain such operation briefly.

Same objection.

A. I understand it. There are so many variations I do not know whether I can explain it from looking at the drawing without reading over the description. I would have to read this over. I have never read it to know what everything means. I think I could make it out if the drawing was a little plainer.

563 Int. 30. I will not spend time for you to do that. State whether or not the form of aspirators or injectors which you have examined here, as shown in defendant's exhibits, are old and have been well known for fifteen or twenty years, say, last past.

Complainants' solicitor objects to the question as leading and as incompetent, irrelevant, and immaterial to any issue in this case.

A. I think all those we have talked about are over fifteen years old. There have been improvements all the time, but the principle has been known for forty years.

Int. 31. I now call your attention to the combination of devices of claim No. 1 of reissued patent 10826, involved in this suit, which consists of a water-closet with a bowl and soil passage leading therefrom and two successive traps in said passage in combination with a flushing pipe for conveying water to the bowl, a suction injector arranged in connection with said pipe and to be traversed by flushing water, and an air pipe leading from the air space between said traps communicating with said injector, and you will please state whether you understand said combination.

A. I do understand exactly what the question means.

Int. 32. Comparing the combination of devices in said claim with the construction shown and described in Peters and Donald's letters patent, please state what, if any, resemblance there is between the two and especially as to the means of creating the vacuum between the traps in the air passage and syphoning the contents of the bowl, giving your reasons for such resemblance.

Complainants' solicitor objects to the question as immaterial.

564 A. Well, both comprise a bowl to be used to receive the soil. They both have two traps and an air space between them. Both have an arrangement for flushing the bowl, and in both the flushing is produced by a vacuum formed by means of water stored up. Both are operated by moving a lever and setting said apparatus in motion. In one the vacuum or partial vacuum is produced and the space between the two traps partially emptied of air and the bowl made to empty itself into the lower trap by creating a vacuum by the water descending in the flushing pipe, the ingress or egress from the closed chamber being shut at the time. In the other the vacuum is created by a vacuum in the air chamber or air vessel or air space created by the action of water escaping into the bowl and created suction on a pipe which empties into the same pipe in which the air pipe *e* joins. From that air

pipe the air is sucked out by means of the flow in the flushing pipe *l*. Both have means of discharging the foul air above the roof—one, I think, in a little better way—but I don't know that that would make much difference.

Int. 33. You are not following the claim at all. You are following the diagram.

A. The question was what the two claims are.

Int. 34. Comparing the combination of said device in said claim one (1) with the construction shown and described in Peter- & Donald patent, please state what, if any, resemblance there is between the two.

A. I think I see it now. There is a bowl, two traps, an air space, a pipe connecting the air with a suction arrangement, and an arrangement for creating suction. In every part they are quite similar, but in one a vacuum is created by water falling and in the other by the water passing out of the injector pipe. The
565 admission of water in both is regulated by a float. This, so far as I can see, comprise all the points of similarity and of difference.

Int. 35. Now, state whether in each case the *the* method used for exhausiting the air between traps is the use of a type of aspirator.

Complainants' solicitor objects to the question as leading, incompetent, irrelevant, and immaterial.

A. Yes, sir.

Int. 36. State your reason why you call the closed chamber in the Peters and Donald and also the device called an injector in the Boyle patent both aspirators.

Complainants' solicitor objects to the question as incompetent, irrelevant, and immaterial.

A. In Peters and Donald patent the vacuum is produced in the closed chamber C by the fall of the water, without any connection between the inside tank or the water being shut off. The water falls in there and creates a vacuum. In the other kind of aspirator the water runs through the various openings and sucks the air from the outside, and that takes the water out of the air pipe and the space between the two. Both have aspirators. They operate a little differently. This goes down and takes the air all around and puts it out and in this case makes a vacuum there, and there is a connection from each of them.

Int. 37. When you said that there was a connection between each of them allowing the air to escape to the roof you said that from an examination of figure 1 of the Boyle patent and an examination of the figure in Peters and Donald patent, did you not?

Complainants' solicitor objects to the question as leading, incompetent, irrelevant, and immaterial.

566 A. Yes, sir.

Int. 38. Do you mean to say that the method of the air

going out on the roof is different in figure 1 of the Boyle patent and the figures shown in Peters and Donald patent?

A. Yes, sir.

Int. 39. I now call your attention to the language of the claim, disregarding figure 1 of the Boyle reissue, because in the claim of figure 1 he makes no mention whatever of what becomes of the air, and I will ask you whether you find anything in the claim showing what becomes of the foul air.

Complainants' solicitor objects to the question as incompetent, the claim itself being the best evidence of what is there contained, which must be construed in the light of specifications.

A. I was judging of the point that is here by the drawing. Referring to figure 1——

Int. 40. You misunderstand me. Please disregard that figure, because when Boyle got his reissued patent, in order to cover devices which were not really covered, he disregarded it, and confine yourself specifically to claim 1 of the reissued patent and state whether there is any statement as to what is to become of the foul air.

Complainants' solicitor objects to the question as incompetent, inasmuch as it does not put a question to the witness, but interjects an argument into the record unwarranted by the facts disclosed and incompetent in a question to the witness and as otherwise irrelevant and immaterial.

A. There is no claim of that kind.

567 Int. 41. No claim of what kind?

A. Of doing away with the bad or foul air that might be contained about the pipes and so on. In the other one there is a distinct pipe.

Int. 24. In Peters and Donald's?

A. Yes, sir.

Int. 43. I now call your attention to the combination of devices in claim No. 2 of said reissued patent No. 10726. Please state whether you understand said combination.

A. Yes, sir.

Int. 44. Comparing the combination of devices in said claim with the construction shown in Peters and Donald's patent, please state what, if any, resemblance there is between the two, and especially as to the means of syphoning the contents of the bowl.

A. I do not see any material difference between them.

Int. 45. Will you kindly name the elements or devices composing said claim 2 of the Boyle reissued patent and the corresponding or similar elements which you find in the Peters and Donald patent? Now, confine yourself, please, to the claim and not to some of Boyle's figures, which misrepresent the claim.

Complainants' solicitor objects to that part of the question of counsel which states that some of Boyle's figures misrepresent the claim as unwarranted by the facts, and also objects to the question as incompetent, irrelevant, and immaterial.

A. I have gone through the whole thing. I have explained how they both act in creating a suction and how the devices take air from the air space. They both do the same thing in a different form. In one there is a regular injector pipe.

568 Int. 46. You may not understand the reason why I ask the question, but since it is claimed that we infringe the claims 1 and 2, I desire your opinion specifically in regard to the elements that make up this claim 2 of the Boyle reissued patent as compared with the elements which you find in Peters and Donald's patent and please state them specifically because of that.

Complainants' solicitor objects to the question as incompetent, irrelevant, and immaterial.

A. There is a water-closet in both of them. In fact the whole thing is a water-closet. There is a soil passage leading from the water-closet in both of them, and there is a flushing pipe for conveying water through the pipe. There is a suction injector or suction pipe, the suction arranged in connection with said pipe and to be traversed with the flushing water, and an air pipe leading from the air space between the traps and communicating with said exhausting arrangement or suction arrangement, whereby the flow of water serves to withdraw air from the air space that is in both of them. Both have water from a reservoir.

Int. 47. Do you know what is meant by the term mechanical equivalent? If so, please state.

A. The mechanical equivalent of an ordinary device is one which fulfills the same office or same purpose by nearly the same means. I could not readily make a proper definition of it.

Int. 48. Please state whether, in your opinion, the substitution of the device called the injector in said Boyle's patent, to do the work of the sealed chamber of Peters and Donald patent in syphoning the contents of the bowl, required anything more than ordinary skill, and give your reasons for your opinion.

569 Complainants' solicitor objects to the question as incompetent, irrelevant, and immaterial, and as asking the witness to determine a question of law.

A. Well, in both devices there is an aspirator; one aspires from the top by the escape of the water and the other does it by carrying a current of water through the pipe which is in connection with the air space. They both suck air from the same space, and both would be equally effective, so far as I can see, the object being, of course, to make the water flow out of the first trap into the next trap, and from the next one into the sewer pipe. To do that a partial vacuum has to be formed, and both will do it equally well.

Int. 49. In your opinion, did it require anything more than ordinary mechanical skill to place what is called the injector in the Boyle patent to perform the function of what is called the sealed chamber in the Peters and Donald patent, so far as syphoning the bowl is concerned?

Complainants' solicitor objects to the question as incompetent, irrelevant, and immaterial; as asking the witness to determine a question of law and asking the question of witness after the invention has been suggested to him whether or not it would require invention to create it.

A. I do not think it required any particular skill.

Int. 50. State your opinion whether or not the use of the injector as an element in Boyle's combination of devices as claimed instead of the sealed chamber as shown and described in Peters and Donald patent was the substitution of a well-known mechanical equivalent, and state the reasons for your opinion.

Complainants' solicitor objects to the question as leading,
570 incompetent, irrelevant, and immaterial and as asking the witness to determine a question of law.

A. I rather think I have stated that before. They both act the same way—they exhaust the air. I do not know what else I can say. I have said it fifteen times. They are similar devices and act the same way. They are in substance the same device. They are equivalents of each other, you might say.

Int. 51. Now, please state whether or not, in your opinion, a mechanic familiar with Peters and Donald patent and the forms of aspirators shown in the defendant's exhibit before him would have had suggested to his mind, and that without invention, as early as 1880 the use of the injector as shown in Boyle's patent as a means of syphoning the contents of the bowl in lieu of the sealed chamber shown in Peters and Donald patent.

Complainants' solicitor objects to the question as leading, incompetent, irrelevant, and immaterial, and further objects to it as incompetent because it is impossible for this witness to determine the question fairly at this stage, the invention of the Peters and Donald patent being disclosed to the witness by the letters patent, and that being a thing which the record shows was not known prior to the invention of Boyle.

A. If he wanted to get rid of the sealed chamber I think it would naturally suggest itself to use an injector as an exhauster.

Int. 52. Why do you think so?

A. There might even another than that have suggested itself. There are a number of similar devices for exhausting air from a pipe or a closed vessel. It is but natural he should take the simplest
571 one—the simplest one that would answer the same purpose—that would be an equivalent of the original device.

Cross-examination by PAUL BAKEWELL, Esq., solicitor for complainants:

X Int. 1. What experience, if any, have you had in the manufacture or sale of water-closets?

A. None whatever.

X Int. 2. What type of water-closet is illustrated and described in Peters and Donald's patent?

A. How do you mean? Do you mean the name under which it goes with plumbers?

X Int. 3. Yes.

A. I do not know; this is the first time I have ever studied a water-closet.

X Int. 4. You have had no practical experience with water-closets, have you?

A. No, sir.

X Int. 5. What type of water-closet is described in letters patent No. 10826 to Boyle?

A. I do not know what the commercial name of it is. I have had nothing to do with them.

HENRY FLAD.

Subscribed and sworn to before me by Henry Fladd this July 17, 1888.

[SEAL.] GEORGE M. BLOCK,
Special Examiner and Notary Public.

Defendant's solicitor states that he closes his testimony.

572 In the Circuit Court of the United States for the Eastern Division of the Eastern District of Missouri.

HENRY HUBER and JAMES E. BOYLE, Complainants,
vs.
N. O. NELSON MANUFACTURING COMPANY, Defendant.

STATE OF MISSOURI, *City of St. Louis,* } *ss:*

I hereby certify that on the 5th day of June, 1888, and on the subsequent days to which the taking of these depositions was by consent of the parties hereto adjourned, as appears by the record hereinbefore contained, before me, George M. Block, special examiner, at the office of Taylor & Pollard, rooms 408 and 410 American Central building, northeast corner of Broadway and Locust street, in the city of St. Louis and State of Missouri, personally appeared, pursuant to a stipulation hereto annexed, at the hours as shown by the foregoing record and the stipulation hereto annexed, Peter White, Samuel Knight, C. M. Woodward, Henry Flad, and Arthur C. Fraser, the witnesses produced before me pursuant to the annexed stipulation by the defendant; and I further certify that Seneca N. Taylor appeared as counsel for defendant and Paul Bakewell appeared as counsel for plaintiff-, and the said Peter White, Samuel Knight, C. M. Woodward, Henry Flad, and Arthur C. Fraser, being by me first duly cautioned and sworn to testify the whole
573 truth and being carefully examined, deposed and said as appears by the depositions hereto annexed.

And I further certify that the said depositions were then and there reduced to writing by me and were, after they had been reduced to writing, subscribed by the witnesses respectively, and the

same have been retained by me for the purpose of sealing up and directing the same to the clerk of the court, as required by law.

And I further certify that I am not of counsel or attorney to either of the parties, nor am I interested in the event of the case.

And I further certify that the fee for taking said depositions, $90.75, has been paid to me by the defendant, and the same is just and reasonable.

In testimony whereof I have hereunto set my hand and official seal, at the city of St. Louis and State of Missouri, this 17th day of July, A. D. 1888.

[SEAL.] GEORGE M. BLOCK,
Special Examiner and Notary Public.

574 In the Circuit Court of the United States, Eastern Division of the Eastern District of Missouri.

HENRY HUBER and JAMES E. BOYLE
vs.
N. O. NELSON MANUFACTURING COMPANY. } In Equity.

It is hereby stipulated and agreed in the above-entitled cause as follows, to wit:

First. That Defendant's Exhibit No. 18 is a true and exact copy from page- 169 and 170 of volume 1 of the publication described in the answer in this case as Knight's American Mechanical Dictionary, by Edward H. Knight, published A. D. 1877 by Hurd and Hughton, at New York city, under the title of "Aspirator," and that figures 392 and 393 of said exhibit are fac-similes of the figures shown upon said pages of said dictionary, and it is further agreed that said publication was published to the world by the persons and at the time and place aforesaid, and that said Exhibit 18 may be used in evidence on the hearing of this case and on appeal, if an appeal be taken to the Supreme Court, with the same force and effect as said pages of said dictionary might or could be used if duly put in evidence before the examiner, and that plaintiffs may be at liberty to make such objections as to the relevancy, competency, and materiality of the matter contained and shown in said exhibit as might or could be made were said pages of said book themselves put in evidence before said examiner.

Second. That Defendant's Exhibit No. 18½ is a true and exact copy from pages 476, 477, 478, and 480 of the 14th edition of
575 Eubank's Hydraulics and Mechanics, by Thomas Eubank, published A. D. 1856 by J. C. Derby, at New York, New York, and that said publication was published to the world by the person and at the time and place aforesaid, and that said Exhibit 18½ may be used in evidence on the hearing of this case and on appeal, if one be taken, with the same force and effect as said pages of said last-named publication might or could be used if duly put

in evidence before the examiner, subject, however, to such objections as to relevancy, materiality, and competency of the matter contained in said exhibit which might be made were said pages of said book put in evidence before said examiner.

Third. It is further agreed that Defendant's Exhibit No. 19 is a true and exact copy from pages 11 and 12 of the publication described in the answer in said cause as Chambers' Encyclopædia, published at Philadelphia, Pa., by J. B. Lippencott & Co., A. D. 1868, volume 8, article "Pumps," section 5, subheading the "Jet Pump," and that said publication was published to the world in the year 1868 at the place and by the persons alleged in said answer, and that said Exhibit 19 may be used in evidence on the hearing of this cause and on appeal, if an appeal be taken to the Supreme Court, with the same force and effect as said pages of said book might or could be used if duly put in evidence before the examiner, subject to like objection as to relevancy, materiality, and competency as to the matter contained in said exhibit were said pages of said book themselves put in evicence.

Fourth. It is further stipulated and agreed that Defendant's Exhibit No. 20 is a true and exact copy of pages 259 and 260 of volume 1, 7th edition of Ure's Dictionary of Arts, Manufacture, and Mines, edited by Robert Hunt, assisted by F. W. Rudler, and printed
576 in London, England, and published in the United States by Longmans, Reed & Co., A. D. 1875, and that said publication was published to the world at the times, in the places, and by the persons aforesaid; and said Exhibit 20 may be used in evidence on the hearing of this case and on appeal, if one be taken, with like force and effect as said pages of said book might or could be used if duly put in evidence before the examiner, subject to like objections as to relevancy, competency, and materiality of the matter contained in said exhibit which might be made were said pages of said book themselves put in evidence.

Fifth. It is further stipulated and agreed that Defendant's Exhibit No. 24½ is a true and exact copy of page 48, of volume 1, of Appleton's Mechanical Dictionary, edited by Park Benjamin and published at New York, N. Y., by D. Appleton & Co., A. D. 1880, article "Air Pump," subheading "Bunson's Air Pump," and that said publication was published to the world in the year 1880, at the place and by the persons aforesaid, and that said Exhibit 24 may be used in evidence on the hearing of this cause and on appeal, if appeal be taken to the Supreme Court, with the same force and effect as said page of said book might or could be used if duly put in evidence before the examiner, subject to like objection as to relevancy, materiality, and competency as to the matter contained in said exhibit were said page of said book itself put in evidence.

Sixth. It is further stipulated and agreed that Defendant's Exhibit No. 25 is a true and exact copy of pages 52 and 53 of Cooley's Cyclopædia of Practical Receipts, revised by Richard V. Tuson and pub-

581 DEFENDANT'S EXHIBIT 18½. George M. Block (Seal), Special Examiner and Notary Public.

The Trombe.

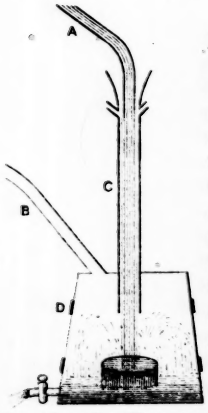

No. 198. The Trombe.

"As the trombe illustrates this part of our subject, a figure of one may as well be given. The pipe A discharges water from a reservoir into a funnel placed on the vertical tube C. The end of A terminates in the funnel, and opposite to it is made a number of openings in C, two of which are shown in the cut. The lower end of C enters the close vessel D and discharges its contents on a stone placed directly under it. As the water from A passes down C it draws air along with it through the top of the funnel, and also through the holes in the upper part of C. As the liquid dashes against the stone the air separates and rises to the top of the vessel whence it is forced by successive volumes through B to the fire, while the water collects at the bottom and is let off by a regulation valve or cock. The machine, it will be perceived, is a miniature imitation of some of nature's operations, for cascades, waterfalls, and also heavy showers of rain are all natural trombes.

The trombe is of considerable antiquity. It was known to Heron and is referred to in Pliney's Natural History. Kircher has given several figures of it. See tom. I, 203, of his Mundus Subterraneus and tom. II, pp. 310, 347, of his Musurgia Universalis, in
582 which last work he shows its application to supply wind to organs, and by discharging the water from the bottom of the vessel upon a wheel he imparted mo- to the keys of those instruments. See also Phil. Trans. Abridg., vol. I, 498.

Liquids raised by currents of air may be illustrated by operations in common life. Whenever water in a well settles to a level with the orifice of the pump pipe air rushes in (on the ascent of the sucker) and sweeps up with it portions of the liquid in the form of dense rain. On the same principle people are enabled to taste scalding liquids. The next time the reader sips hot soup or tea or coffee he will find himself involuntarily keeping the edge or rim of the spoon or vessel a short distance from his mouth and protruding his lips till the upper one projects a little over the edge; then drawing in his breath the entering air ripples the surface of the liquid and by its velocity bears broken portions along, precisely like the pump just mentioned. The liquid particle-, being thus mixed with comparatively large volumes of cool air, are so reduced in their temperature as to be received with injury and without inconvenience.

Waterspouts appear to be charged in much the same way, whatever may be the active agent in the formation of these singular phenomena, for the sea immediately under their orifice has often

been observed to bubble or boil violently and raise into the spout in disjointed masses.

A stream of water directed into or through a body of the same liquid also communicates motion to those particles of the latter that are in contact with or adjacent to the current. Examples of this are furnished in several of nature's hydraulic operations. That constant oceanic current produced by the trade winds is one. It sweeps round the globe, but is deflected and divided by the varying configuration of the lands that lie in its way. Under the
583 torrid zone it passes through the Pacific and Indian oceans, whirls round the southern point of Africa, inclines to that continent in again approaching the equator; then, stretching across the Atlantic, is divided by the South American coast, one part turning northward to the Gulf of Mexico; thence this last division issues as the gulf stream, and, being turned in an easterly direction by the coast of the United States, it bears away past the banks of Newfoundland and extends its influence to Ireland, Iceland, Norway, and the North sea. This mighty current not only draws with it the liquid channel through which it flows, but the ocean for leagues on each side is carried along with it or follows in its train, and thus it is incessantly transferring to warmer latitudes the warm waters of the equinoctial regions.

The volumes of water which shoot from the mouths of the Amazon, Oronoco, and Mississippi continue with almost unabated velocity for leagues into the sea an- *important* motion to the contageous portions of the latter, which are compelled to accompany them in their course.

A current of water not only imparts motion in this manner to a mass of the same liquid when on a level with itself, but it may be applied to raise water from a lower level. This at first sight does not appear very obvious. A person having a field which he is unable to drain for want of a place of discharge sufficiently low for the purpose would hardly think his object could be attained by passing a rapid stream into it from a higher level. To some farmers this would seem the most direct way to deluge the land; yet the thing is not only possible, but in some cases quite easy, as will appear from the following experiments made by M. Venturi in 1797:

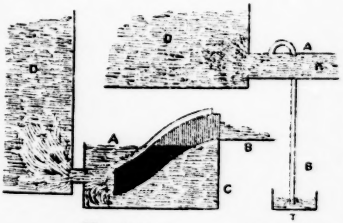

No. 199. No. 200.

584 From the lower part of the cistern D, No. 199, a horizontal tube proceeded into the vessel A C. The water in D was kept at thirty-two and one-half inches above the centre of the pipe. Opposite and at a short distance from the pipe was place- the mouth of an inclined rectangular channel or gutter, open at top. The water issuing from the pipe rushed up this channel and was discharged at B, but as it entered the gutter the current dragged in with it the contents of A C until the surface sunk from A to C. From this experiment it is obvious that land on

a low level, as at C, might be drained in this manner and the water discharged above, as at B, wherever a motive current could be obtained. Venturi applied the principle with success to some marshy land belonging to the public."

DEFENDANT'S EXHIBIT No. 19. George M. Block (Seal), Special Examiner and Notary Public.

"Pumps."

"5. The jet pump. This pump is worked by water power and is worthy of notice on account of the expreme simplicity of the parts and not requiring the care of an attendant while in operation.

Figure 9 is a representation of this pump, E is the water which it is required to raise to the level of the water D, and B is the water in the stream available for working the pump. The water B
585 passes down the pipe A and is discharged from the jet or nozzle E into the conical pipe F. Round the nozzle is the vacuum chamber G, at the bottom of which is attached the conical pipe F and into the side of which the suction pipe H enters from the water to be pumped. The water, in passing from the nozzle into the conical pipe, carries air with it, and so gradually forms a vacuum in the chamber G when the water rises into it from the level C through the pipe H, and it is in turn carried with the jet down the conical pipe into this discharge level D. The velocity of the water coming from the jet is gradually retarded by the action of the conical pipe, the speed decreasing as the area of section increases, and the visviva of its motion is by the retardation converted into a sucking force, drawing the water from the suction pipe through the vacuum chamber into the conical pipe. The water issuing from the jet will have a speed equal to that produced by a column of the height B C or the sum of the fall and the lift. This pump may be viewed, for purposes of explanation, as a syphon, into a shorter leg of which a jet of water is injected, which overcomes the pressure due to the difference of levels and reverses the ordinary motion of the water in a syphon. An efficiency of eighteen per cent. has been obtained from this pump, which is low as compared with that obtained from other descriptions of pump; yet in cases where waste of water power is not so much to be avoided as expense in erecting, working, and maintenance these pumps possess decided advantages.

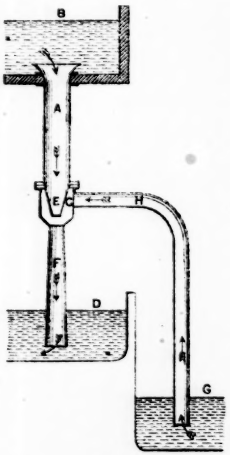

Fig. 9.

The case to which they are peculiarly applicable is the drain-
586 age of marshes which have streams of water adjacent to them descending from a higher level."

DEFENDANT'S EXHIBIT No. 20. George M. Block (Seal), Special Examiner and Notary Public.

"Aspirator.—An apparatus used for drawing a stream of air through a tube or other vessel. There are several varieties used by chemists in the analysis of air. One or two only need be mentioned here.

"Brumier's consists of two equal cylindrical vessels, placed one above another and communicating by tubes, which can be opened or closed, so that when the water has run from the upper to the lower vessel the apparatus, turning for the purpose on a horizontal axis, may be inverted so as to repeat the process.

"An aspirator devised some years ago by Mr. M. W. Johnson is of considerable interest, as the principle of its action has of late received extensive application in the construction of certain forms of exhausting apparatus. The arrangement of Johnson's aspirator will be readily understood from the accompanying (figure 95). A tap in connection with a supply of water is fitted, by means of a piece of India-rubber tubing, to a small cylinder, A, opening below into a long, straight glass tube, B, and communicating, by means of a lateral branch, C, with the vessel through which the stream of air is to be drawn. On opening the tap the water runs down the tubes A B, carrying with it air, which it sucks in through the branch
587 tube C. In this way a stream of air continues to flow in at C as long as water is allowed to run through A B. An aspirator of this form was fitted up by Mr. Johnson at the Royal College of Chemistry and was described before the chemical society in 1852. (Jour. Chem. Soc., vol. 4, p. 186.)

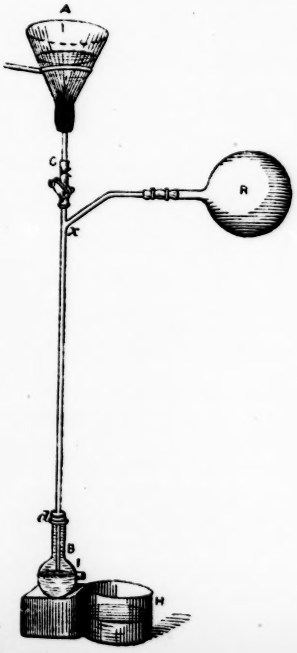

95.

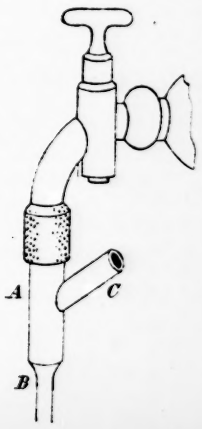

"Johnson's aspirator is similar in principle to the water-blowing machine, known as the Trombe, used with the old Catalan iron furnaces, still working in the Pyrenees and other parts of southern Europe. In the Trombe a cistern of water is connected with wooden pipes having small openings called aspirateurs communicating with the external atmosphere. As the stream of water descends from the cistern through the pipes it draws down with it a current of
588 air, entering through these aspirateurs, and the mixed air and water passes into a vessel below, whence the water flows out through a special aperature, whilst the air passes to the tuyere.

"On referring to the previous figure of Johnson's aspirator, it is clear that if the lateral tube C, instead of being connected with an open tube through which air can be drawn, be connected with a closed receiver, the air will be gradually sucked out of this vessel by the descending current of water and a vacuum, more or less perfect, may be thus obtained. That is, indeed, the principle of the admirable, though simple, exhausting apparatus introduced by Mr. Sprengel, in which a vacuum is obtained by the descent of a column of mercury. The mercury is placed in a large funnel, A (figure 96), which communicates with a glass tube, *c d*, longer than the tube of the mercurial barometer and opens at both ends. The receiver R to be exhausted is connected with a lateral tube opening into the main tube at *x*. On pressing a spring-clasp attached to the India-rubber connection below *c*, the mercury flows down the tube *c d*. At the lower end of this tube — opens a little below the lateral spout of the bulb B; the first portions of mercury hermetically seal this open end and prevent any ingress of air. The descending column of mercury is broken up into detached cylinders separated by columns of air sucked in from the vessel R. The mercury and air pass out at the lateral aperature of the bulb B, and to economize the mercury it is from time to time poured back from the vessel H to the funnel A. As rarefaction proceeds, the quantity of air inclosed with the mercury becomes less and less, and as the exhaustion approaches completion the mercurial column is almost uninter-upted by any air. At this stage of the operation the falling mercury makes the characteristic sound of a liquid moving in a vacuum, familiar in the com-
589 mon water hammer. When the exhaustion is complete about thirty inches of mercury will be supported in the tube *c d*, and the remaining part of the tube, together with the lateral branch *x* and receiver R, is in the condition of the Torricellian vacuum—that is to say, it is a space containing nothing but vapor of mercury at very low tension. By means of this mercurial pump a higher degree of rarefaction can be attained than with the ordinary air pump. Dr. Sprengel found no difficulty even with common cold mercury in rarefying the air to one-millionth of its original density. The inventor recommends the use of an exhausting syringe to remove the bulk of the air, employing the mercurial pump only as an auxiliary in completing the exhaustion. In practice the Sprengel pump is not so simple in construction as that previously figured, but is furnished with certain accessory parts, which do not, however, affect the general principles of its action. Some improvements in the pump have been introduced by Prof. McLeod.

(For Sprengel's original researches see "Journal Chemical Society," 1865, p. 9; for McLeod's improvements see same journal, 1867, p. 307.)

Dr. Sprengel, in explaining the action of his mercurial pump, says: "My instrument is merely the reverse of the Trombe, with this addition, that the supply of air is limited, while that of the Trombe is unlimited."

"An important application of the principle of the Sprengel pump has been recently made by Prof. Bunsen in his new method of filtering. The operation of filtering is usually very tedious, and in many branches of manufacture a rapid method of filtration is highly desirable. Bunsen's great improvement consists in accelerating the operation by filtering into a flask from which the air has been partially withdrawn. The pressure of the atmosphere
590 on the surface of the liquid in the filter forces the liquid through the pores of the paper, and the partial vacuum on the other side offers but little resistance to its passage. To effect the exhaustion the vessel which receives the filtered solution is placed in connection with a water air pump—that is, an apparatus on Sprengel's principle, but working with water instead of mercury. This water air pump is recommended by Bunsen not only for washing precipitates, but for crystalizing substances from syrupy mother liquors. Both the mercurial and other air pumps may become of great use in the arts, where a ready and perfect means of exhaustion may be needed."

DEFENDANT'S EXHIBIT 24½. George M. Block (Seal), Notary Public and Special Examiner.

Air Pump.

162

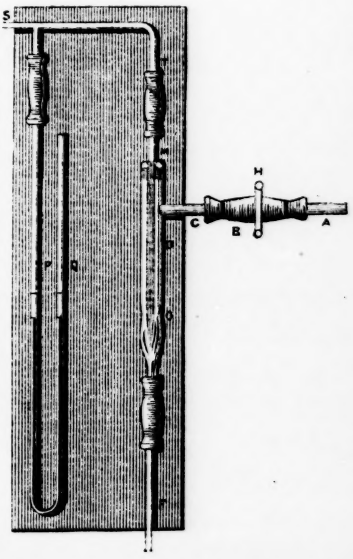

"Bunsen's air pump is represented in figure 162. Falling water is employed to carry the surrounding air with it, and in this way a steady exhaustion is produced. The device consists of a wide glass tube, D, in which a narrower tube reaches down to N, connected at the
591 top by a well-fitting cork, M. Water is carried in by a side branch, C, connected by means of an India-rubber tube, B, closed by a spring, H, with a tube, A, drawing water from a reservoir. The current of this water going down in the tube D around the inner tube draws the air from T and S and from any vessel connected with S. To increase the effect the wide tube D is connected below with a lead tube, F, which reaches twenty or thirty feet down, so that this long descending column of water acts like a powerful continuous piston."

DEFENDANT'S EXHIBIT No. 25. George M. Block (Seal), Notary Public and Special Examiner.

Air Pump.

"Air pump, Bunson's water. (See figure on page 53.)

This consists of a wide glass tube, *a*, into which another tube, *b b b*, passes air-tight; *c* is an India-rubber tube connecting *a* with a water supply; *d* is a clamp to stop the flow of water through *c*; *e* is another clamp to regulate the flow; *f* is a reservoir to prevent any water which may accidentally come over from getting
592 into *j*; *g* is a plug to let out any water from *f*; *h* is a screw for connecting *a* air-tight to a piece of tubing, which should pass thirty-two feet, if possible, below the level of *a*; *i* is a piece of strong India-rubber tubing to connect the pump with the vessel to be exhausted. The water rushes in at *c* and down *h*, carrying bubbles of air with it till the exhaustion is complete. The figure illustrates a common application of this pump to the rapid filtration of liquids which ordinarily pass through paper with difficulty; *a* is represented as being about half full of water; *k* is a funnel fixed air-tight in the India-rubber stopper of the bell-jar *j*; *l* is a small cone of platinum foil to prevent the paper filter which fits into it from being broken; *m* is a plate of ground glass; *n* is a beaker to receive the filtrate.

Air Pump, Spren-el's.

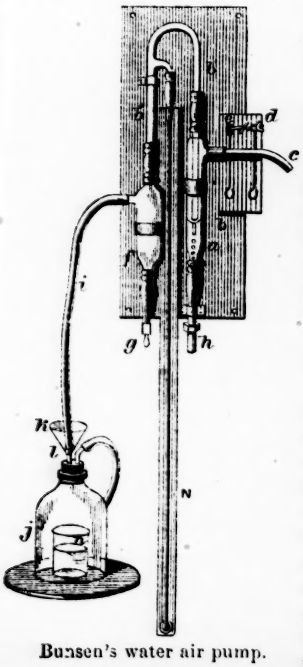

Bunsen's water air pump.

This apparatus depends on the principle of converting the space to be exhausted into a Torricellian vacuum.

In the subjoined figure *c d* is a glass tube longer than a barometer, open at both ends, and connected by means of India-rubber tubing with a funnel, A, filled with mercury and supported by a stand. Mercury is allowed to fall in this tube at a rate regulated by a clamp at C; the lower end of the tube *c d* fits in the flask B, which has a spout at the side a little higher than the lower end of *c d*; the upper part has a
593 branch at *x*, to which a receiver, R, can be tightly fixed. When the clamp at C is opened the first portions of mercury which run out close *to* the tube and prevent air from entering below. As the mercury is allowed to run down the exhaustion begins, and the whole length of the tube from *x* to *d* is fitted with cylinders of air and mercury, having a downward motion. Air and mercury escape through the spout bulb B, which is above the basin H, where the mercury is collected. It is

poured back from time to time into the funnel A to be repassed through the tube until the exhaustion is complete.

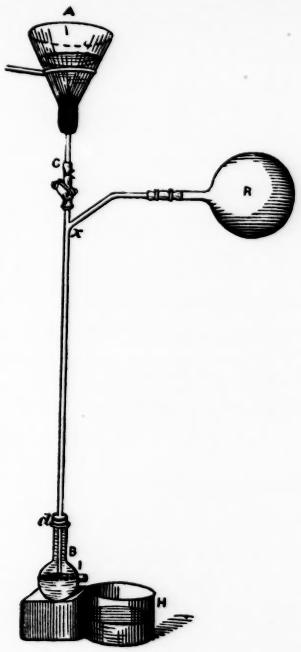

594 DEFENDANT'S EXHIBIT NO. "7." George M. Block (Seal), Special Examiner and Notary Public.

In the Circuit Court of the United States for the Eastern Division of the Eastern District of Missouri.

HENRY HUBER *et al.*
vs.
N. O. NELSON MANUFACTURING COMPANY. } In Equity. 2905.

It is stipulated by counsel in the above-entitled cause that the following fact may be taken as admitted by the complainants, both on the hearing in the circuit court and in the Supreme Court of the United States, viz:

That the British commissioners of patents published to the world April 15, 1881, in the Commissioners of Patents' Journal, No. 2487, the following statement, to wit, under the heading "Patents which have become void in the week ending 9th day of April, 1881, through non-payment of the one-hundred-pound stamp duty," the words and figures following: "1207, Stewart Peters, of Glasgow, in the county of Lanark, North Britain, coppersmith, and William

Donald, of the same place, plumber, for an invention of improvements in and connected with water-closets, and in part applicable for the supply or discharge of various liquids, dated 7th April, 1874."

ARTHUR S. BROWNE,
Of Counsel for Complainants.

New York, February 27, 1888.

TAYLOR & POLLARD AND
B. F. REX, *For Defendant.*

595 DEFENDANT'S EXHIBIT No. 9. George M. Block (Seal), Special Examiner and Notary Public.

Copy of Patent Register.

"April 7, 1874.—Petition, declaration, and provisional specification of Stewart Peters, of Glasgow, in the county of Lanark, North Britain, coppersmith, and William Donald, of the same place, plumber, for grant of letters patent for an invention for improvements in and connected with water-closets and in part applicable for the supply or discharge of various liquids.

Sealed with the commissioner's seal and referred to attorney general.

April 10.—Petition, declaration, and provisional specification left with attorney general for allowance.

April 13.—Certificate of attorney general allowing provisional protection received and filed and certificate thereof given.

April 17.—Provisional protection advertised in Gazette.

August 7.—Notice to proceed received and filed and certificate thereof given.

August 11.—Notice to proceed advertised in Gazette.

596 September 3.—Petition, declaration, and provisional specification again referred to attorney general.

September 4.—Fiat for warrant received.

September 28.—Warrant left with attorney general for signature.

September 29.—Warrant received, sealed, and filed.

October 2.—Letters patent prepared, sealed, and dated April 7, 1874.

Octobes 6.—Specification filed in pursuance of letters patent.

April 6, 1877.—Letters patent stamped with fifty-pound stamp produced at office of commissioners of patents and certificate thereof indorsed thereon.

April 7, 1881.—Letters patent expired."

"I certify this to be a true copy.

H. NEADERLACK, *Comptroller.*"

597 And afterwards, to wit, on the fifth day of July, A. D. 1889, the following further proceedings were had and appear of record in said cause, to wit:

HENRY HUBER *et al.*, Complainants,
vs.
N. O. NELSON MANUFACTURING COMPANY, Defendant. } 2905.

By consent of the parties hereto, it is ordered that the clerk of this court transmit under seal to the Supreme Court of the United States the original paper exhibits filed in this cause, the same to accompany the transcript of the record on appeal to said Supreme Court and to be used on the final hearing therein.

(Signed) AMOS M. THAYER, *Dist. Judge.*

598 UNITED STATES OF AMERICA,
Eastern Division of the Eastern Judicial District of Missouri, } *ss:*

I, A. P. Selby, clerk of the circuit court of the United States in and for the eastern division of the eastern judicial district of Missouri, do hereby certify the writing hereto attached to be a true transcript of the record, pleadings, and proceedings in case No. 2905, of Henry Huber and James E. Boyle, complainants, against The N. O. Nelson Manufacturing Company, defendant, as fully as the same remain on file and of record in said case in my office.

In witness whereof I hereunto subscribe my name and affix the seal of said court, at office, in the city of St. Louis, in the eastern division of said district, this fourth day of September, in the year of our Lord eighteen hundred and eighty-nine.

Seal of the United States Circuit Court, Eastern Division of the Eastern Judicial District of Missouri.

A. P. SELBY,
Clerk of said Court.

Endorsed on cover: Case No. 13,724. E. Missouri C. C. U. S. No. 143. Henry Huber and James E. Boyle, appellants, *vs.* The N. O. Nelson Manufacturing Company. Filed October 10, 1889.

148 US 270

EXHIBITS, CASE No. 13,724.

SUPREME COURT OF THE UNITED STATES.

OCTOBER TERM, 1892.

TERM No., 143.

HENRY HUBER ET AL., APPELLANTS,

vs.

THE N. O. NELSON MANUFACTURING COMPANY.

APPEAL FROM THE CIRCUIT COURT OF THE UNITED STATES FOR THE EASTERN DISTRICT OF MISSOURI.

RECORD FILED OCTOBER 10, 1889.

EXHIBITS, CASE No. 13,724.

SUPREME COURT OF THE UNITED STATES.

OCTOBER TERM, 1892.

TERM No., 143.

HENRY HUBER ET AL., APPELLANTS,

vs.

THE N. O. NELSON MANUFACTURING COMPANY.

APPEAL FROM THE CIRCUIT COURT OF THE UNITED STATES FOR THE EASTERN DISTRICT OF MISSOURI.

INDEX.

	Original.	Print.
Complainants' Exhibit 1—Letters patent No. 260,232, granted Henry Huber June 27, 1882	1	1
2—Reissue letters patent No. 10826, granted James E. Boyle April 19, 1887	6	6
6—Letters patent No. 255,485, granted James E. Boyle March 28, 1882	16	14
7—Letters patent No. 291,139, granted James E. Boyle January 1, 1884	22	19
12—Letters patent No. 308,358, granted Frank B. Hanson November 25, 1884	28	25
13—Assignment from James E. Boyle to Henry Huber November 26, 1881	30	27
14—Assignment from Peters & Donald to James E. Boyle, October 27, 1881	32	28
16—Letters patent No. 249,577, granted James E. Boyle November 15, 1881	38	30

JUDD & DETWEILER, PRINTERS, WASHINGTON, D. C., OCTOBER 19, 1892.

Henry Huber, his heirs or assigns, for the term of seventeen years from the twenty-seventh day of June, one thousand eight hundred and eighty-two, the exclusive right to make, use, and vend the said invention throughout the United States and the territories thereof, subject to the limitation prescribed by sec. 4887, Rev. Stats., by reason of English patent, dated April 7, 1874, No. 1207.

In testimony whereof I have hereunto set my hand and caused the seal of the Patent Office to be affixed, at the city of Washington, this twenty-seventh day of June, in the year of our Lord one thousand eight hundred and eighty-two, and of the Independence of the United States of America the one hundred and sixth.

Seal Patent Office, United States of America.

H. M. TELLER,
Secretary of the Interior.

Countersigned:

E. M. MARBLE,
Commissioner of Patents.

(No Model.)

S. PETERS & W. DONALD.

WATER CLOSET.

No. 260,232. Patented June 27, 1882.

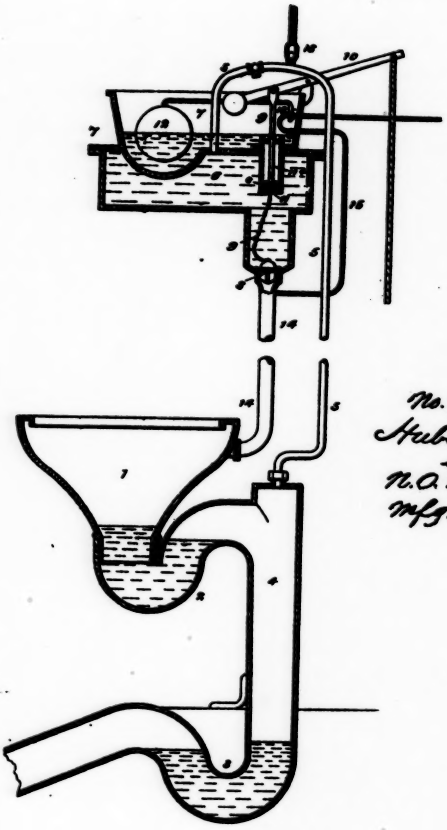

No. 143.
Huber et al.
v.
N. O. Nelson
Mfg. Co.
p. 3

WITNESSES:
E. B. Bolton
Geo Bainton

INVENTORS:
Stewart Peters & William Donald,
By Their Attorneys,
Burke, Fraser & Connett

STEWART PETERS and WILLIAM DONALD, of Glasgow, Scotland, assignors, by mesne assignments, to Henry Huber, of New York, N. Y.

Water-Closet.

Specification forming part of Letters Patent No. 260,232, dated June 27, 1882. Application filed November 29, 1881. (No model.) Patented in England April 7, 1874, No. 1207.

To all whom it may concern :

Be it known that we, Stewart Peters and William Donald, both of Glasgow, Scotland, have invented certain improvements in water-closets, of which the following is a specification.

This invention (which forms the subject of letters patent granted to us in Great Britain on the 7th day of April, 1874, No. 1207) has reference to the traps and water-supply system of water-closets, its objects being to facilitate the emptying and flushing thereof, and to prevent waste of the water supplied thereto.

The accompanying drawing shows one form of our closet in vertical mid-section.

(Here follows diagram marked p. 3.)

1 is the bowl or basin, 2 and 3 are traps in the discharge-passage leading therefrom, and 4 is an air-space in said passage between the two traps. The trap 2 is located immediately below and leads from the bowl, so as to receive the soil deposited in the latter, and both traps and their connecting-pipe should be made in one piece of earthenware to avoid joints. An air-pipe, 5, leads from the space 4. It is obvious that if sufficient suction be applied to this pipe a portion of the air will be drawn from the space 4, and the trap 2 will be siphoned, nearly all its contents will fall over into the trap 3, and air will be drawn in from the bowl 1, thereby drawing from the room the foul odors resulting from the use of the closet. If then the bowl be flushed with a large volume of water, a strong current will be established through both traps, and they will be thoroughly cleansed. To perform these functions we have devised the form of water-supply apparatus shown, which is arranged above the bowl, and comprises a closed compartment or flushing chamber, 6, and an open cistern or supply-tank, 7, with the necessary valves. From the top or upper part of the chamber 6 an air-pipe, 5, leads to the air-space 4, and from the bottom of the chamber a flushing-pipe, 14, leads to the bowl 1.

The admission of water to the flushing-pipe is determined by a flushing-valve, 8, and the admission of water from the supply-tank 7 to the chamber 6 is determined by a supply-valve, 11, which in the construction shown rises and falls in a tube, 11^a, so as to move

above or below an orifice or port, *c*, in said tube. When the valve 11 is down, as shown, water can flow from the tank 7 down the tube 11^a and through the orifice *c* into the chamber 6; but when the valve is lifted it closes the tube above the orifice and stops such flow. The valves are operated through the medium of mechanism connected with a pull-handle, with the seat of the closet, or with the door thereof, and when the valve 11 is open or down the valve 8 is always closed or on its seat. The valve 11 always closes before the valve 8 opens, and opens after the valve 8 closes. The valves are shown as being connected to a weighted lever, 10, through a rod, wire, or chain, and this lever is connected by a wire or cord to the closet pull-handle, seat, or door. The tank 7 is supplied by a valve or cock, 13, in the service-pipe, operated by a float, 12, and from this valve we usually lead a pipe, 15, which receives part of the admitted water and conducts it into the flushing-pipe 14.

The drawing shows the normal condition of the parts, the traps 2 and 3 containing water, the air in the space 4 and pipe 5 being slightly compressed, the chamber 6 being full of water, the tank 7 being filled to its normal level, and the valve 8 being closed and the valve 11 open. The parts remain in this condition during the use of the closet and until the movement of the pull-handle, seat, or door tilts the lever 10, which first closes the valve 11 and then opens the valve 8, whereupon the water in the flushing-chamber commences to descend to flush the bowl, and in so doing a suction is created in the upper part of the chamber, air is drawn from the pipe 5 and space 4, and the trap 2 is siphoned, its water carrying with it the soil deposited therein, and the flushing-water from the pipe 14 cleansing the bowl and trap. When the valves are returned to their normal position the chamber 6 refills through the orifice *c* and in so doing lowers the water-level in the tank 7 and forces back the air into the pipe 5 and space 4, thereby causing a slight compression therein, which will cause the water in the trap 2 to assume a higher level on the side of the bowl 1 than on that of the space 4, as indicated.

The water in the tank 7 is replenished by the opening of the valve 13, and part of the flow through that valve is carried by the pipe 15 into the pipe 5, and thence into the bowl 1, thereby refilling the trap 2. This after-flow will be necessary or desirable, under some circumstances, whenever the flushing-water is insufficient, in connection with the siphoning effect, to leave the trap 2 filled. It is thus seen that the capacity of the chamber 6 is the measure of the water used in flushing the closet, thereby preventing waste of water, while the closet will be thoroughly flushed and kept in cleanly condition.

We usually fit the pipe 5 with a branch vent-pipe, 16, leading to the outer air, and it is necessary to provide this vent-pipe with a check-valve opening upwards, thus insuring that no air shall enter to break the vacuum during the siphoning, while permitting the foul air from the space 4 and pipe 5 to lift the valve and escape outside the building when it attains sufficient pressure during the

refilling of the chamber 6, or if at any time a pail of slops were thrown into the bowl 1.

It is obvious that with our closet there is no opportunity for sewer-gas to enter the room, for even if the gas were to pass the trap 3 it would have easy escape through the pipes 5 and 16.

We are aware of the constructions of water-closet bowl and traps shown in English patents No. 252 of 1860 and No. 146 of 1872, neither of which is identifical with our invention.

We claim as our invention—

1. A water-closet consisting of a bowl, a fixed trap-bend in the passage leading therefrom, whereby a portion of water is retained in the bowl, a second trap in the discharge-passage leading from the first, whereby an air-space is formed between the two traps, and an orifice communicating with said air-space and adapted for the attachment of an air-pipe, all combined and arranged in substance as described.

2. A water-closet consisting of a bowl, a fixed trap-bend in the soil-passage leading therefrom, whereby a portion of water is retained in the bowl, and a second trap in said soil-passage below the first, whereby an air-space is formed between the two traps, in combination with means for rarefying the air in said space upon the flushing of the closet, substantially as set forth, and for the purposes described.

3. A water-closet consisting of a bowl, a trap leading therefrom, a second trap in the discharge-passage leading from the first, and an air-space between the two traps, in combination with a flushing-valve and means for operating the same to flush the closet, and means for drawing air from the space between the two traps, constructed to be set in operation by the act of opening said flushing-valve, substantially as set forth.

4. A water-closet having a trap leading from its bowl, a second trap in the discharge-passage leading from the first, and an air-space between the two traps in combination with a flushing-pipe opening into said bowl, a flushing-chamber adapted to supply said pipe, a flushing-valve controlling the admission of water to said pipe, and an air-pipe leading from the air-space between the traps and terminating within the flushing-chamber at the top thereof, substantially as set forth.

5. A water-closet consisting of a bowl, a trap leading therefrom, a second trap in the discharge-passage leading from the first, and an air-space between the two traps, in combination with a pipe leading from said air-space to a flushing-chamber and terminating at the top thereof, the said chamber, an open-air pipe communicating with said pipe and chamber and containing a check-valve opening outwardly therefrom, a flushing-pipe leading from said chamber to the bowl, and a valve controlling the entrance of water to said pipe, substantially as set forth.

6. A water-closet consisting of a bowl, a trap leading therefrom, a second trap in the discharge-passage leading from the first, and an air-space between the two traps, in combination with an air-pipe leading from said space and terminating at the top of a flushing-

chamber, the said chamber, a supply-tank, a supply-valve controlling the admission of water from said tank to said chamber, a flushing-valve controlling the escape of water from said chamber and arranged to open after and to close before the supply-valve, and a flushing-pipe leading from said flushing-valve to the bowl, substantially as set forth.

7. A water-closet consisting of a bowl, a trap leading therefrom, a second trap in the discharge-passage leading from the first, and an air-space between the two traps, in combination with an air-pipe leading from said space and terminating in the upper part of a flushing-chamber, the said chamber, a flushing-pipe leading from said chamber to the bowl, a flushing-valve controlling the admission of water to said pipe, a tank to supply said chamber, a float-valve to govern the admission of water from the service-pipe to said tank, and an after-flow pipe leading from said float-valve to the flushing-pipe below the flushing-valve, substantially as set forth.

In witness whereof we have hereunto signed our names in the presence of two subscribing witnesses.

STEWART PETERS.
WILLIAM DONALD.

Witnesses:
PETER FORGIE.
RICHARD WHITE.

6 COMPLAINANTS' EX. 2. February 22, 1888. Ben. L. Fairchild, Spec. Ex.

(2–175.)

20153.

DEPARTMENT OF THE INTERIOR,
UNITED STATES PATENT OFFICE.

To all persons to whom these presents shall come, Greeting:

This is to certify that the annexed is a true copy from the records of this office of the reissue letters patent granted James E. Boyle April 19, 1887, number 10826, for improvement in flushing apparatus for water-closets.

In testimony whereof I, Benton J. Hall, Commissioner of Patents, have caused the seal of the Patent Office to be affixed this 30th day of September, in the year of our Lord one thousand eight hundred and eighty-seven, and of the Independence of the United States the one hundred and twelfth.

Seal Patent Office, United States of America.

BENTON J. HALL,
Commissioner.

7 (2–155.)

No. 10826, reissue.

THE UNITED STATES OF AMERICA.

To all to whom these presents shall come:

Whereas James E. Boyle, of Brooklyn, New York, has presented to the Commissioner of Patents a petition praying for the reissue of letters patent for an alleged new and useful improvement in flushing apparatus for water-closets, for which letters patent were issued to him dated January 1, 1884, which letters having been surrendered, the same have been cancelled and new letters ordered to issue to him on an amended specification, a description of which invention is contained in the specification, of which a copy is hereunto annexed and made a part hereof, and has complied with the various requirements of law in such cases made and provided; and

Whereas, upon due examination made, the said claimant is adjudged to be justly entitled to a patent under the law:

Now, therefore, these letters patent are to grant unto the said James E. Boyle, his heirs or assigns, for the term of seventeen years from the first day of January, one thousand eight hundred and eighty-four, the exclusive right to make, use, and vend the said invention throughout the United States and the territories thereof.

In testimony whereof I have hereunto set my hand and caused the seal of the Patent Office to be affixed,

Seal Patent Office, United States of America.

at the city of Washington, this nineteenth day of April, in the year of our Lord one thousand eight hundred and eighty-seven, and of the Independence of the United States of America the one hundred and eleventh.

D. L. HAWKINS,
Acting Secretary of the Interior.

Countersigned:

BENTON J. HALL,
Commissioner of Patents.

10 UNITED STATES PATENT OFFICE.

JAMES E. BOYLE, of Brooklyn, New York.

Flushing Apparatus for Water-Closets.

Specification forming part of reissued Letters Patent No. 10826, dated April 19, 1887. Original No. 291,139, dated January 1, 1884. Application for reissue filed January 2, 1885. Serial No. 151,880.

To all whom it may concern :

Be it known that I, James E. Boyle, a citizen of the United States, residing at Brooklyn, in the county of Kings and State of New York, have invented certain improvements in flushing apparatus for water-closets, of which the following is a specification.

This invention relates to water-closets of the same general character as that described in my patent No. 255,485, dated March 28, 1882, and has for its principal object to cheapen and simplify the overhead flushing apparatus.

(Here follow diagrams marked pp. 8 & 9.)

Figure 1 of the accompanying drawings shows the preferred form of my invention in vertical section, the tank being connected with a water-closet bowl of the character shown in my said patent. Figs. 2 and 3 are diagrams showing the same construction of tank in two different conditions. Figs. 4 and 5 are vertical sections of two modified forms of tanks; and Fig. 6 is a diagram showing another modification.

Referring to Fig. 1, A is the bowl, and B the soil-passage leading therefrom and forming traps C and D and intervening air-space, *d*. E is the service tank or cistern, supplied with water through a float-valve, which keeps it filled normally to the level shown. F is the flushing-chamber, *l* the flushing-pipe leading down from the bottom of this chamber to the flushing-rim *k* of the bowl, and *e* the air-pipe or suction-pipe leading from the air-space *d* to the top of the chamber F. These parts are all of substantially the same construction as the like-lettered parts in my said patent, except in the particulars hereinafter described. The chamber F is arranged wholly below the tank E, with the exception of an upward extension through the tank formed by a tube, F′, to the top of which the vent-pipe *f* is connected. There need be no check-valve in this pipe. The suction-pipe *e* rises through the chamber F, inside the tube F′, and nearly to the top of the latter, its open upper end being above the water-level in the tank. Inside the tube F′ is fixed a tube or air-bell, *n*, the top of which extends slightly above the top of the pipe *e*, and is closed, and the bottom of which is open and extends nearly to the bottom of the chamber F. Inside of the tube *n*, and between it and the pipe *e*, is placed a pipe, *r*, the upper end

J. E. BOYL

FLUSHING APPARATUS FOR

No. 10,826.

Fig. 1.

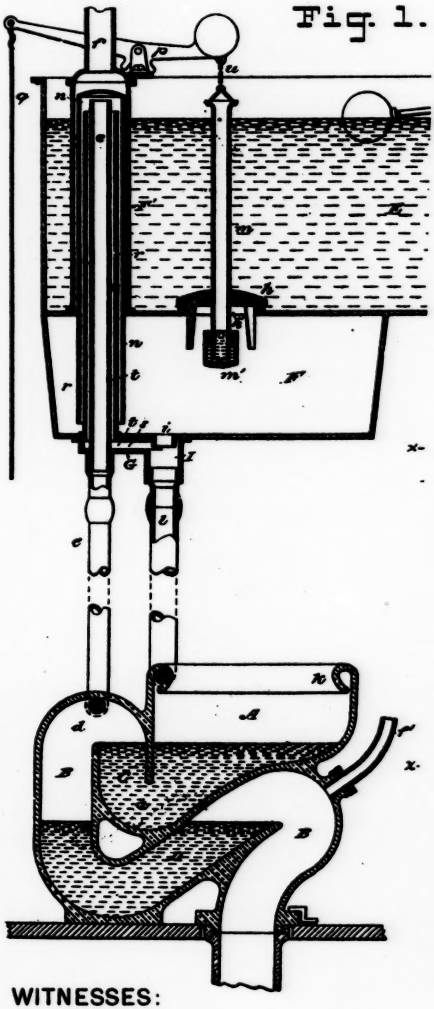

WITNESSES:

Geo. H. Fraser

E. B. Bolton

Bu

et 2.

387.

p 91.

B.

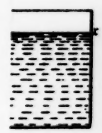

OR:

ngle

meter

10 UNITED STATES PATENT OFFICE.

JAMES E. BOYLE, of Brooklyn, New York.

Flushing Apparatus for Water-Closets.

Specification forming part of reissued Letters Patent No. 10826, dated April 19, 1887. Original No. 291,139, dated January 1, 1884. Application for reissue filed January 2, 1885. Serial No. 151,880.

To all whom it may concern :

Be it known that I, James E. Boyle, a citizen of the United States, residing at Brooklyn, in the county of Kings and State of New York, have invented certain improvements in flushing apparatus for water-closets, of which the following is a specification.

This invention relates to water-closets of the same general character as that described in my patent No. 255,485, dated March 28, 1882, and has for its principal object to cheapen and simplify the overhead flushing apparatus.

(Here follow diagrams marked pp. 8 & 9.)

Figure 1 of the accompanying drawings shows the preferred form of my invention in vertical section, the tank being connected with a water-closet bowl of the character shown in my said patent. Figs. 2 and 3 are diagrams showing the same construction of tank in two different conditions. Figs. 4 and 5 are vertical sections of two modified forms of tanks; and Fig. 6 is a diagram showing another modification.

Referring to Fig. 1, A is the bowl, and B the soil-passage leading therefrom and forming traps C and D and intervening air-space, *d*. E is the service tank or cistern, supplied with water through a float-valve, which keeps it filled normally to the level shown. F is the flushing-chamber, *l* the flushing-pipe leading down from the bottom of this chamber to the flushing-rim *k* of the bowl, and *e* the air-pipe or suction-pipe leading from the air-space *d* to the top of the chamber F. These parts are all of substantially the same construction as the like-lettered parts in my said patent, except in the particulars hereinafter described. The chamber F is arranged wholly below the tank E, with the exception of an upward extension through the tank formed by a tube, F′, to the top of which the vent-pipe *f* is connected. There need be no check-valve in this pipe. The suction-pipe *e* rises through the chamber F, inside the tube F′, and nearly to the top of the latter, its open upper end being above the water-level in the tank. Inside the tube F′ is fixed a tube or air-bell, *n*, the top of which extends slightly above the top of the pipe *e*, and is closed, and the bottom of which is open and extends nearly to the bottom of the chamber F. Inside of the tube *n*, and between it and the pipe *e*, is placed a pipe, *r*, the upper end

2 Sheets—Sheet 1.

J. E. BOYLE.

FLUSHING APPARATUS FOR WATER CLOSETS.

No. 10,826. Reissued Apr. 19, 1887.

Fig. 1.

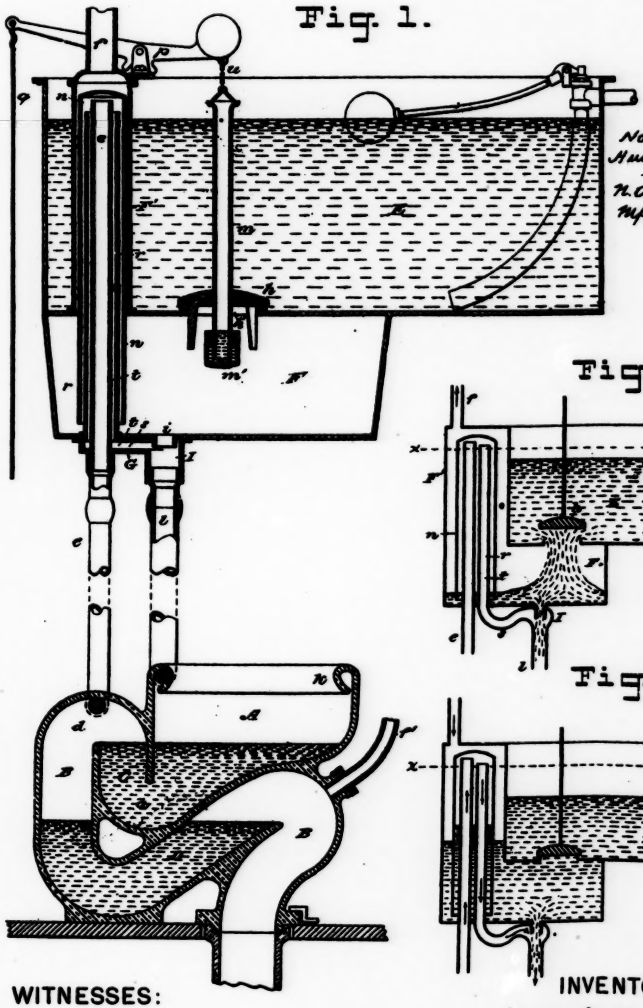

No. 143. Huber et al. v. N. O. Nelson Mfg. Co. p. 8

Fig. 2.

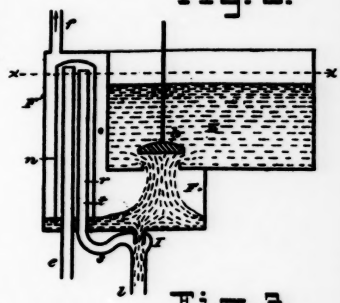

Fig. 3.

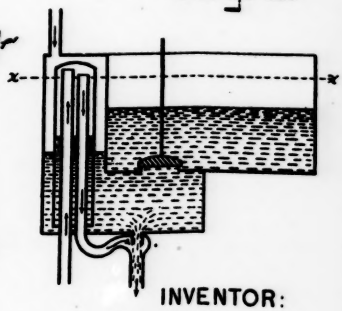

WITNESSES:

Geo. H. Fraser.

E. B. Bolton

INVENTOR:

James E. Boyle

By his Attorneys,

Burke Fraser & Connetor

2 Sheets—Sheet 2.

J. E. BOYLE.

FLUSHING APPARATUS FOR WATER CLOSETS.

No. 10,826. Reissued Apr. 19, 1887.

No. 143. Halberstadt v. N. O. Nelson Mfg Co. 1891.

Fig. 4.

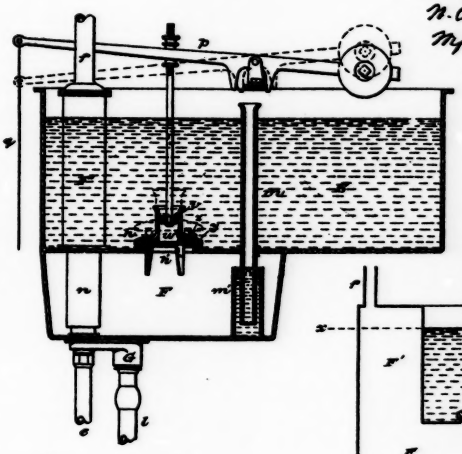

Fig. 5.

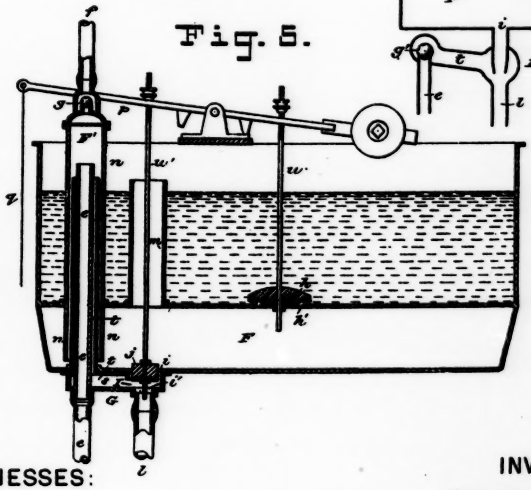

Fig. 6.

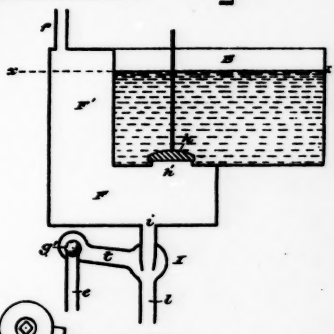

WITNESSES:

Geo. H. Fraser.

A. R. Bolton

INVENTOR:

James E. Boyle

By his Attorneys,

Burby Fraser & Connelly

of which is open and extends preferably above the water-level in the tank E, but not so high as the top of the pipe *e*, and the bottom of which extends through the bottom of the chamber F and connects with a passage-way, *s*, formed in a casting, G, which is fastened beneath the chamber. This casting extends to the right, and the outlet-orifice *i* at the bottom of the chamber opens into it. Beneath this orifice the flushing-pipe *l* is connected to the casting G. The orifice *i* is surrounded with a pendent flange or short downwardly-projecting tube which depends into the casting G, and this orifice and casting, in connection with the flushing-pipe *l*, form a suction-injector, I, the operation of which causes a suction through the passage (lettered *t*) formed by the tube *r* and passage-way *s*, as will be presently explained.

There is but one valve—the flushing-valve *h*—which closes the inlet-opening *h'* to the chamber F. This opening should be about three inches in diameter, and the outlet-orifice *i* should be about three-fourths or seven-eighths of an inch in diameter, or the two may be of other dimensions in approximately the same proportion. The valve *h* is connected by a stem or chain to a weighted lever, *p*, which keeps the valve normally closed, and is operated to open it by a pull connected to it through a wire or chain, *q*, in any usual manner. The overflow-pipe *m* is shown as passing through the valve *h* and serving as its stem. This pipe is trapped by a cup, *m'*, which incloses its lower end and rises and falls with it.

In my said patent the flushing-chamber F is a sealed chamber and operates during the flushing to produce a suction in the pipe *e* by means of a vacuum. In my present invention the flushing-chamber is not sealed, and consequently is not a vacuum-chamber, and the suction is produced by the action of the injector I, as will presently be described.

The operation of my invention will be best understood from the diagrams, Figs. 2 and 3. In these the pipe *e* is not shown as passing through the pipe *r*, but for clearness the two are placed side by side, and the bell *n* and upward extension F' are exaggerated. The normal water-level in the tank E is shown by the line *x x*. The parts are shown in Fig. 1 in their normal condition, the chamber F being empty and the valve *h* closed. When the person using the
11 the closet pulls down on the wire or chain *q* through the usual pull-handle or other suitable appliance, the valve *h* is lifted and water from the tank E commences to flow rapidly into the chamber F, and immediately thereafter to flow outward through the orifice *i*. Fig. 2 shows the parts in this condition. As the inlet-orifice *h'* has about sixteen times the area of the outlet-orifice *i*, the water enters the chamber F much more rapidly than it can escape from it and quickly fills the chamber, expelling the air through the tube F' and pipe *f*. By the time the chamber is thus filled the water running out through the orifice *i* and descending the flushing-pipe will commence to flow into the bowl A, and the user hearing it will then naturally release the pull, whereupon the valve *h* will drop back to its seat. The water contained in the flushing-chamber will then continue to flow out through the orifice *i* until the chamber is

emptied. Fig. 3 shows the apparatus shortly after the valve *h* is closed. From the time the water entering the chamber reaches the orifice *i* until the chamber is emptied there is a continuous stream of water flowing out through this orifice, falling through the cavity or injector-chamber in the casting G and flowing down the flushing-pipe. In crossing the cavity in the casting it encounters and carries with it a portion of air, and so creates a partial vacuum in this cavity in the manner common to injectors. This partial vacuum or suction extends up through the passage *t* into the bell *n*, from which it draws the air for an instant, and until the water in the chamber F rises above the bottom end of this bell, and so seals it and prevents any further flow of air into it. The rarefaction rapidiy increases from that instant, and air is drawn up through the pipe *e* and from the space *d*. The effect of this rarefaction is to siphon the trap C, or cause the water to flow over from this trap and fall into the trap D, and this siphoning proceeds rapidly until the water-level in the bowl A is lowered to the outlet-opening *a*, whereupon air enters the space *d* from the bowl and breaks the vacuum. This breaking of the vacuum should occur shortly after the first of the flushing-water reaches the bowl, and thereafter the water enters the bowl and is as rapidly drawn out by the siphoning of the trap, thereby causing a powerful outflow through the bowl and soil-passage, which carries with it the entire contents of the bowl. In the course of this operation the vacuum may be broken several times by entrance of air from the bowl. In any case the rarefaction in the bell *n* will cause the water to rise to a greater height in it than in the chamber F, as shown in Fig. 3, and if the suction is sufficiently strong the water in the bell will be drawn up to the top of the pipe *r*, and will descend through the passage *t* mixed with air. Thus the water will be drawn from the chamber F to the pipe *l* through two conduits simultaneously. The rarefaction in the bell *n*, pipe *c*, and space *d* will continue until the water in the chamber has so far run out as to unseal the bottom of the bell, whereupon the vacuum is broken finally by the entrance of air into the bell, and thereupon the remaining water will flow into the bowl as an "after-wash," and will fill it up to the level shown, leaving it ready for the next use of the closet. The precise operation will depend upon the proportioning of the parts, as by altering the relative capacities of the trap C, space *d*, pipe *e*, bell *n*, passage *t*, and chamber F, and the relative areas of the orifices *h'* and *i* the operation might be considerably modified.

I have stated that the person using the closet will naturally release the pull when he hears the water pouring into the bowl, and if the parts are so proportioned that when this occurs the chamber F will be filled the operation will almost invariably be satisfactory. If he should release the pull too quickly, the only result would be a proportionately shorter flush, and if he should hold the pull too long the flush would be unnecessarily prolonged, the only disadvantage of which would be a waste of more or less water. To prevent the latter contingency a self-sealing valve may

be used as the flushing-valve. The valve shown in my patent No. 249,577, dated November 17, 1881, will answer the purpose well.

Fig. 4 shows a modification in which a valve of this character is used in connection with a different lever arrangement. The wire *q* is to be connected to the water-closet seal, and the weight on the lever tends to lift the valve. The parts are shown in full lines in the normal position. When the seat is depressed the lever is tilted to the position shown in dotted lines, thereby forcing down the piston *v* in the cylinder *w*, which is fixed to the valve *h*. The piston has a cupped leather packing, which permits the water to escape around it during its downward movement. The parts remain thus until the user rises from the seat, whereupon the lever is tilted by its counter-weight back to its normal position and the piston *v* is lifted. The piston in lifting carries with it, by suction, the cylinder *w*, and so lifts the valve *h* to the position shown in dotted lines. The cylinder *w* has a small inlet-conduit or leak-passage, *y*, adjusted by a screw, *z*, and as water slowly enters through this conduit the valve slowly descends, and finally seats itself. The adjustment should be such that the valve will seat itself as soon as the chamber F is filled. In other respects the operation is the same as already described. The overflow-pipe *m* is placed at one side and fixed in place and its lower end is sealed in a fixed cup, *m'*.

Fig. 5 shows how two valves may be used, the arrangement of the valves and the lever being the same as in my said patent No. 255,485. The outlet-orifice *i* is made larger than in the con-
12 struction before described, and the valve *j*, fixed to the stem *w'*, works up and down through this orifice, and when lowered seats itself on the bottom of the casting G over the orifice *i'*, whence the flushing-pipe leads. The valve *j* nearly fills the orifice *i*, the area of the intervening annular space being about the same as of the orifice *i* in Fig. 1. The two valves are so arranged that when the lever is at mid-stroke both are seated; but when the lever is at either extremity of its stroke one valve is seated and the other is lifted. The upward extension F' and bell *n* are no longer distinct, and a check-valve, *g*, is interposed between the interior of the bell and the air-pipe *f* leading from its top.

The parts are shown in their normal position. When the seat is depressed, the valve *j* is seated and the valve *h* is lifted. The chamber F is quickly filled through the orifice *h'*, and water flows thence into the bell *n*, the air therein escaping through the valve *g*. Water also flows through the annular opening *i*, and fills the passage *t* to the same level. The chamber F, bell *n*, and passage *t* remain full until the seat is released, whereupon the valve *h* closes and the valve *j* opens. The water from the passage *t* and chamber F then commences to run out into the pipe *l*, the former flowing the more rapidly and instantly producing a suction, which should suffice to lift the water in the bell *n* and cause it to flow down the passage *t*. The water from the chamber F flows out through the annular orifice *i*, and descends through the flushing-pipe, and acts to cause a suction or rarefaction in the same manner as in Fig. 1. This construction causes a more powerful and rapid suction than the other; but I

prefer that first described, because of its greater cheapness, as its action is practically sufficient.

It will be seen that my present invention introduces a new principle for operating double-trapped or siphon water-closets—namely, that of producing the requisite vacuum by causing the falling flushing-water to act as an injector and draw air along with it. I have combined with this a means for securing the requisite after-wash to refill the bowl at the termination of the flushing, which means is practically the same as that set forth in my said patent No. 255,485; but it is not essential that this particular means of securing the after-wash be used.

The diagram, Fig. 6, is designed to illustrate the essential principle of my present invention even more clearly than the preceding figures. The air-pipe *e* does not enter the chamber F, but is connected by a branch with the flushing-pipe *l* below the chamber, the injector I being arranged at their junction. The check-valve *g'* is shown merely to prevent water setting back and flowing down the pipe *e*, since the top of this pipe is below the water-level *x x*, instead of above it, as before. When the flushing-valve *h* is lifted, the water from the tank E flows down the flushing-pipe *l*, and through the injector I, thus drawing air from the pipe *e* during the whole time that the water continues to flow through the injector. In this construction the chamber F has no function of its own, and constitutes, essentially, a mere enlargement of the upper portion of the flushing-pipe, to the same effect as the ordinary "service-box" commonly used by plumbers. No provision for securing an after-wash is here shown; but the bowl may be refilled after the flushing by any suitable means—as, for instance, by water admitted by a valve through an independent flushing-pipe, as shown in the patent of Peters & Donald, No. 260,232, dated June 27, 1882.

I claim as my invention—

1. A water-closet consisting of a bowl, with the soil-passage leading therefrom and two successive traps in said passage, in combination with a flushing-pipe for conveying water to the bowl, a suction-injector arranged in connection with said pipe and to be traversed by the flushing-water, and an air-pipe leading from the air-space between said traps and communicating with said injector, substantially as set forth, whereby the flow of water through said injector serves to draw air from said air-space.

2. A flushing apparatus for water-closets, consisting of the combination of a reservoir tank, a flushing-valve controlling the outlet thereof, a flushing-pipe for conveying water therefrom to the bowl of the closet, a suction-injector arranged in connection with said pipe and to be traversed by the descending flushing-water, and a suction-pipe in connection with said injector, whereby the water in flowing from said tank downward through the flushing-pipe traverses said injector and sucks the air from said suction-pipe.

3. The combination of a reservoir-tank, a flushing-chamber, a valve controlling the admission of water from said tank to said chamber, a suction-pipe communicating with the interior of said chamber, an injector beneath the outlet from said chamber, a flush-

ing-pipe leading downward from said injector, and a suction-passage affording communication from said injector to said suction-pipe, substantially as and for the purposes set forth.

4. A flushing apparatus for water-closets, consisting of a reservoir-tank, a flushing-valve controlling the outlet thereof, a flushing-pipe for conveying water therefrom to the bowl of the closet, a suction-injector arranged in connection with said pipe and to be traversed by the descending flushing-water, and a suction-pipe in connection with said injector, whereby the passage of water through said injector will suck the air from said suction-pipe, all combined together, and with a trapped air-passage communicating with the said suction-pipe and arranged to be unsealed, and thereby to admit air to the suction-pipe and break the vacuum therein before the cessation of the flow of flushing-water, substantially as set forth.

13 5. The combination of the tank E, the chamber F, provided with inlet-orifice *h'* and outlet-orifice *i*, the valve *h*, the suction-injector I, the flushing-pipe *l*, the air-pipe *e*, the suction-passage *t*, and the air-bell *n*, substantially as set forth.

6. A flushing apparatus for a water-closet, consisting of the combination of a reservoir-tank, a flushing-chamber provided with an inlet-orifice of large area, communicating with said tank and with an outlet-orifice of contracted area proportioned to the area of said inlet orifice, substantially as specified, a valve adapted to close said inlet-orifice, an air-pipe opening into said flushing-chamber, and a flushing-pipe leading from said outlet-orifice, all arranged and adapted to operate substantially as set forth.

In witness whereof I have hereunto signed my name in the presence of two subscribing witnesses.

JAMES E. BOYLE.

Witnesses:

ARTHUR C. FRASER.
GEO. BAINTON.

Filed Jan. 21, 1889.

A. P. SELBY, *Clerk.*

14 COMPLAINANTS' EXHIBIT 6. Feb. 22d, 1888. Ben. L. Fairchild, Spec. Ex.

Filed Jan. 21, 1889.

A. P. SELBY, *Clerk.*

16 UNITED STATES PATENT OFFICE.

JAMES E. BOYLE, of Brooklyn, New York.

Water-Closet.

Specification forming part of Letters Patent No. 255,485, dated March 28, 1882. Application filed August 5, 1881. (No model.)

To all whom it may concern:

Be it known that I, James E. Boyle, a citizen of the United States, residing in Brooklyn, in the county of Kings and State of New York, have invented certain improvements in water-closets, of which the following is a specification.

My invention relates to what are known as "water-surface" closets, or those in which the soil is deposited into a receptacle containing water.

(Here follows diagram marked p. 15.)

Figure 1 of the accompanying drawings is a vertical mid-section of my improved closet and the apparatus pertaining thereto, viewed from the front; and Fig. 2 is a side elevation of the closet alone.

A is the bowl. *a* is the exit-aperture thereof, and B is the soil pipe or passage leading therefrom. This pipe or passage curves upward from the orifice *a*, forming thereby a trap, C, of which the bowl A forms one leg, and which consequently acts to retain the water in the bowl, and also prevents any escape of sewer-gas from the soil-pipe into the bowl. From the trap C the pipe or passage B extends downward, and is there formed into another trap, D, from which the soil-pipe *b* leads to the sewer in the usual manner. A pipe, *f'*, leads from just below the trap D to the open air, at the roof or elsewhere, to give free vent to gases rising through the pipe *b* in the usual manner. Between the traps C and D is a confined air-space, *d*, from which leads a suction-pipe or air-pipe, *e*.

Above the bowl, and near the ceiling of the room, is placed a tank, E, which in the main is of the ordinary construction. This tank is fed from the service-pipe of the building through a self-closing float-valve or ball-cock, whereby a nearly uniform level is at all times secured. This cock is not shown in the drawings, being well known. A chamber, F, which serves both as a flushing and suction chamber, is formed in the tank E by means of a bulk head or partition, as shown, or it may be a separate vessel from the tank. The suction-pipe *e* enters this chamber and opens at its top above the highest water-level in the tank. From the chamber F a pipe, *f*, leads to the roof or into a chimney, or otherwise communicates with the open air in any known way. The pipe *f'* is preferably a branch of this air-pipe. A check-valve, *g*, is interposed between the pipe *f* and the chamber F. This valve may be of the usual construction, so as to freely permit the ascent of gases, but prevent their descent into the

(No Model.)

J. E. BOYLE.

WATER CLOSET.

No. 255,485. Patented Mar. 28, 1882.

No. 143. Huber et al v. N. O. Nelson Mfg. Co. p. 15

Fig. 1.

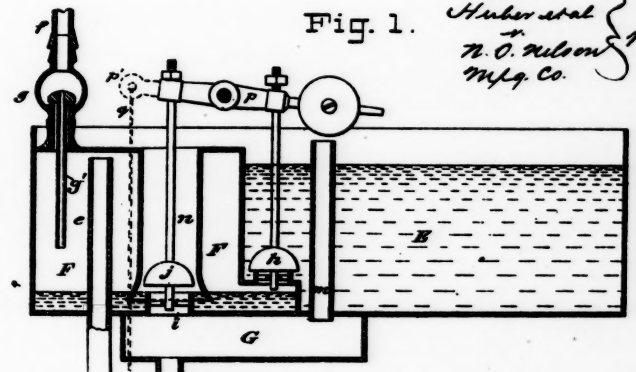

Fig. 1.

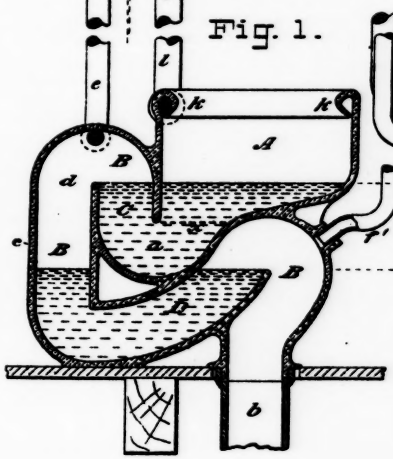

Fig. 2

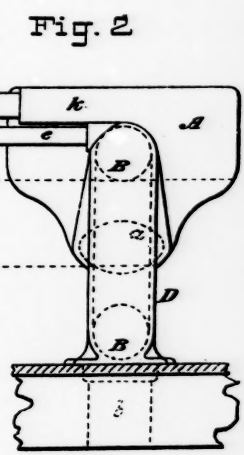

WITNESSES:

E. B. Bolton

Geo. Baimford.

INVENTOR:

James E. Boyle,

By his Attorneys,

Burke, Fraser & Connolly

chamber; but I prefer to employ the special construction shown, which I will hereinafter describe.

From the chamber F a flushing-pipe, *l*, leads to the flushing-rim *k* of the bowl A. Two valves are provided, an inlet-valve, as at *h*, to control the admission of water from the tank E to the chamber F, and an outlet-valve, as at *j*, to control the discharge from the chamber into the pipe *l*, both being operated through a weighted lever, as *p*, from below—say from a pull or by other means—so that when either is open the other must be closed.

So far as already described there is no substantial novelty in this closet, nearly the same construction being embodied in English patent No. 1207 of 1874. My apparatus differs from that in the following-described respects: The check-valve *g* opens directly into the chamber F, (instead of into a bend in the pipe *e*, as in the English patent,) and from it a tube, g′, extends down into the lower portion of the chamber, its lower end opening thereinto and its upper end opening above the valve. This tube, if fixed to the valve, should be light, that it may not interfere with the lifting of the valve; but it is only essential that its upper end have ultimate communication with the atmosphere.

The valves *h* and *j*, I have shown as working each against an upturned seat, the valve *j* closing over an opening, *i*, leading to a service-box, G, which I have shown as interposed between the chamber F and the pipe *l*. An air-pipe, *m*, extends upward from the service-box G to above the highest water-level in the tank E. Another open-topped air-pipe, *n*, passes down through the chamber F, and its lower end projects below and incloses the upturned valve-seat *i* and terminates slightly above the bottom of the chamber. The normal water-level in the chamber is determined by the height of the valve-seat *i*, and as the pipe *n* extends below that level its bottom edge is immersed in the water, thus sealing it and preventing any escape of air from the chamber F into the room. The valves *j* and *h* are the ordinary waste-preventing tank-valves used with hopper-closets from time immemorial. Their stems extend upward and bear nuts or adjustable collars, which in operation are engaged by opposite arms of a weighted lever, *p*. When this lever is at mid-stroke or in a horizontal position both valves are seated; but when it is tilted in either direction one of the valves is raised or unseated. Its shaft or fulcrum-arm bears an arm, *p*′, (shown in dotted lines in Fig. 1,) which projects on the opposite side of the fulcrum from the weight, and a wire or chain, *q*, (also shown in dotted lines,) extends downward, and is connected to the hinged seat of the closet (not shown) in the well-known manner. The weight on lever *p* normally keeps the valve *j* unseated and the water-closet seat lifted slightly.

17

The operation of my closet is as follows: The drawings show the normal condition and position of the parts, or that assumed when not in use. The chamber F is filled with air above the level of the valve-seat *i*. The service-box G and flushing-pipe *l* are empty of water. When the water-closet seat is depressed by the weight of the user the lever *p* is pulled down by the wire *q*, thereby dropping

the valve *j* onto its seat and immediately afterward lifting the valve *h*. While the parts are in these positions the water from the tank E flows through the seat of the valve *h* into the chamber F, in which it rises to the same level as in the tank, while the air in the chamber passes the valve *g* and escapes through the pipe *f*. While the water-level in the chamber is below the bottom of the air-tube *g'* the air escapes through that tube; but after the water rises above and seals its end the escaping air must lift the valve *g*. When the user rises from the seat the working parts all return to the position shown, whereupon the water in the chamber F rushes out through the opening *i* into the service-box G, whose capacity equals or exceeds that of the bowl A from the dotted line *x* up to the normal water-level, (see Fig. 1,) quickly fills this box, and proceeds to descend through the pipe *l*. The rapid fall of water from the chamber F creates a partial vacuum therein, which causes a strong suction in the pipe *e*, thereby drawing the water from the trap C, causing it to fall over into the trap D, and lowering the water-level in the bowl to the line *x*, whereupon the vacuum is broken by the entrance of air from the bowl into the air-space *d*. This indraft of air from the bowl insures the drawing from the room of all, or nearly all, the foul odors resulting from the use of the closet. This operation is completed and may be repeated once or oftener (according to the proportioning of the several parts) before the flushing-water descending through the pipe *l* reaches the bowl, whereupon the latter is refilled, and before the water-level in the chamber F descends to the bottom of the tube *g'*, or near enough thereto to prevent the entrance of air through said tube to break the vacuum in the chamber. Prior to the vacuum being so broken the water is somewhat retarded in its flow from the chamber F by the suction behind it; but after unsealing the bottom of the tube *g'* the admission of air through that tube sets free the remaining water, causing a full downward flow through the pipe *l*, thereby filling the bowl above its normal water-level and causing a forcible current outward through the trap C. As the flushing-water is several times the volume of the water in the bowl and trap C, that water, with the excrement and paper held in it, is all forced beyond the trap C, and its place is taken by fresh clean water.

The service-box G and its air-pipe *m* serve much the same purpose as the air-tube *g'* in retarding the flow of water at first and afterward freeing and accelerating it, and may be used in connection with the air-tube, as shown, or as a partial substitute therefor in case of its omission.

The most important and essential feature of novelty in my closet is the means I have provided for securing a thorough and abundant "after-wash," the flushing-water being freed from the retarding influence of the partial vacuum above it as soon as that vacuum has done its work of siphoning the bowl, instead of leaving the vacuum unbroken, as heretofore, so that the contents of the bowl will be siphoned out nearly as fast as they are supplied—a defect which my invention entirely remedies.

By my arrangement of the valves *h j*, in connection with the seat,

the chamber F is normally empty of water, so that any sewer-gas which may possibly pass the trap D will have free escape through the pipe *e*, valve *g*, and pipe *f*, and in case of any suction in the sewer-pipe air may freely enter through the pipes *g'* or *n* and pass down through the pipe *e;* and there is also no possibility of excrement being left in the bowl through forgetfulness, as in the use of closets operated by a pull-handle. In case of suddenly dashing a pail of water or slops into the bowl A, any extra pressure in the space *d* thereby caused would be relieved by an escape of air through the tube *g'* or valve *g*.

I form the bowl A and traps C and D all in one piece of earthenware; and in order to bring both traps above the floor and save cutting into the latter, and to avoid raising the seat above its proper height, I have devised the relative arrangement of traps shown. The trap C, of which the bowl A forms one leg, extends to one side of the bowl, and its other leg extends upward close alongside the bowl. From this leg the receiving-leg of the trap D extends down to the floor, and its other leg extends thence laterally and upwardly close under the trap C and bowl A, and (in order to carry it to the the necessary height) beyond the center of the bowl, whence the passage curves back underneath it and terminates at the floor, directly under the center of the bowl by preference, so that my closet can be substituted for the usual pan and other closets without altering the wood-work or moving the soil-pipe *b*. Thus it will be seen that instead of placing the belly or lowest part of the trap C directly over the crown or highest part of the trap D, as heretofore, the belly of the trap C is arranged to depend into the space between the two legs of the trap D, and the crown of the latter is arranged to one side of the belly of the former, thus rendering the closet much more compact vertically.

18

My invention is susceptible of considerable formal or structural modification without departing from its essential features. If an automatic closet is not desired, the lever *p* may be arranged with the weight on the opposite arm, so as to stand normally in the position opposite to that shown, and be so arranged in connection with a pull-handle as to be tilted into the position shown when the handle is lifted. The chamber F will then fill while the closet is not in use, and will be discharged while the pull-handle is upheld.

I claim as my invention—

1. A water-closet bowl forming one leg of a trap, a second trap below the first, an exhaust-pipe leading from the air-space between the two traps and terminating near the top of a flushing-chamber, the said chamber provided with inlet and outlet valves, and a flushing-pipe leading from the outlet-valve thereof to the bowl, all in combination, with suitable means, substantially as hereinbefore set forth, for preventing further retardation of the flow of flushing-water after the bowl has been siphoned by the partial vacuum formed by the descent of water in the flushing-chamber, thereby augmenting the after-wash and insuring the final filling of the bowl.

2. A water-closet bowl formed as one leg of a trap, a second trap below the first, an exhaust-pipe leading from the air-space between

the two traps to the upper part of a flushing-chamber, the said chamber provided with inlet and outlet valves, and a flushing-pipe leading from the outlet-valve thereof to the bowl, all in combination, with suitable means, substantially as hereinbefore set forth, for automatically breaking the vacuum in said chamber when the water-level therein has descended to a predetermined point.

3. A water-closet bowl formed as one leg of a trap, a second trap below the first, an exhaust-pipe leading from the air-space between the two traps to the upper part of a flushing-chamber, the said chamber provided with inlet and outlet valves, and a flushing-pipe leading from the outlet-valve thereof to the bowl, all in combination with an air-pipe entering said flushing-chamber and opening therein in the lower portion thereof, substantially as and for the purposes set forth.

4. A water-closet bowl formed as one leg of a trap, a second trap below the first, an exhaust-pipe leading from the air-space between the two traps to the upper part of a flushing-chamber, the said chamber provided with inlet and outlet valves, and a flushing-pipe leading from the outlet-valve thereof to the bowl, all in combination with a check-valve opening outwardly from the top of the flushing-chamber, and an air-tube extending into the latter and opening therein about midway of its height, substantially as set forth.

5. The combination of bowl A, traps C and D, air-space *d*, pipe *e*, chamber F, pipe *n*, depending into said chamber, valve-seat *i*, projecting up inside the pipe *n*, valve *j*, normally unseated, pipe *l*, leading from said seat *i* to the bowl A, a normally-closed inlet-valve for the chamber F, and means for opening said inlet-valve and closing the valve *j* upon the depression of the water-closet seat, substantially as and for the purposes set forth.

6. The combination of bowl A, traps C and D, air-space *d*, pipe *e*, chamber F, inlet and outlet valves therefor, service-box G, into which said outlet-valve opens, air-pipe *m*, and flushing-pipe *l*, substantially as set forth.

7. The combination of bowl A and traps C and D, molded in one piece, with the belly of the trap C arranged to depend between the two legs of the trap D, and the crown of the latter arranged to one side of the belly of the trap C and close underneath the bowl A, substantially as set forth.

In witness whereof I have hereunto signed my name in the presence of two subscribing witnesses.

J. E. BOYLE.

Witnesses:
ARTHUR C. FRASER.
HENRY CONNETT.

19 COMPLAINANTS' EXHIBIT 7. February 22nd, 1888. Ben. L. Fairchild, Special Examiner.

Filed Jan. 21, 1889.

A. P. SELBY, *Clerk.*

(No Model.) 2 Sheets—Sheet 2.

J. E. BOYLE.

FLUSHING APPARATUS FOR WATER CLOSETS.

No. 291,139. Patented Jan. 1, 1884.

Fig. 4.

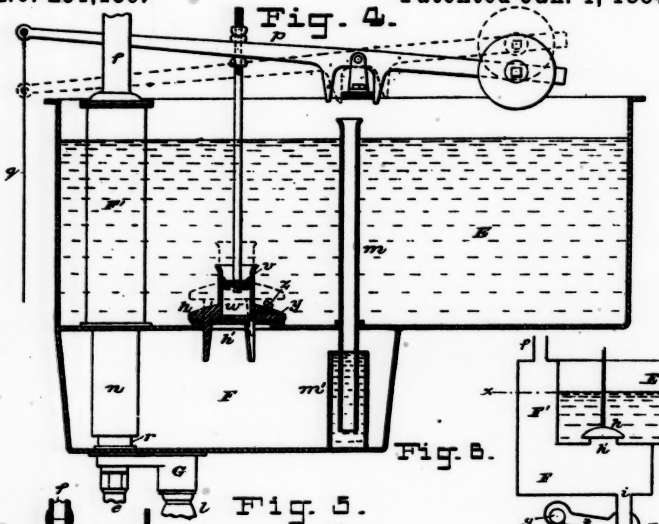

Fig. 6.

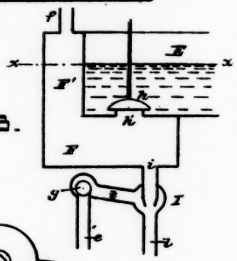

Fig. 5.

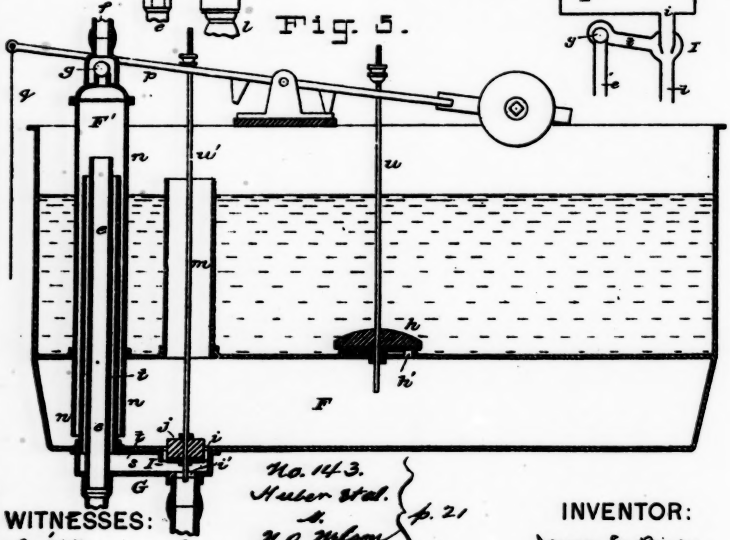

No. 143.
Huber et al.
v.
H. O. Wilson
Mfg. Co.
p. 21

WITNESSES:
Geo. H. Fraser.
E. R. Bolton

INVENTOR:
James E. Boyle
By his Attorneys,
Burke, Fraser & Connett

22 UNITED STATES PATENT OFFICE.

JAMES E. BOYLE, of Brooklyn, New York.

Flushing Apparatus for Water-Closets.

Specification forming part of Letters Patent No. 291,139, dated January 1, 1884. Application filed March 12, 1883. (No model.)

To all whom it may concern:

Be it known that I, James E. Boyle, of Brooklyn, in the county of Kings and State of New York, have invented certain improvements in flushing apparatus for water-closets, of which the following is a specification.

This invention relates to water-closets of the same general character as that described in my patent No. 255,485, dated March 28, 1882, and has for its principal object to cheapen and simplify the overhead flushing apparatus.

(Here follows diagram marked pp. 20 & 21.)

Figure 1 of the accompanying drawings shows the preferred form of my invention in vertical section, the tank being connected with a water-closet bowl of the character shown in my said patent. Figs. 2 and 3 are diagrams showing the same construction of tank in two different conditions. Figs. 4 and 5 are vertical sections of two modified forms of tanks, and Fig. 6 is a diagram showing another modification.

Referring to Fig. 1, A is the bowl, and B the soil-passage leading therefrom and forming traps C and D and intervening air-space, *d*. E is the service tank or cistern, supplied with water through a float-valve, which keeps it filled normally to the level shown. F is the flushing-chamber; *l*, the flushing-pipe leading down from the bottom of this chamber to the flushing-rim *k* of the bowl, and *e* the air-pipe or suction-pipe leading from the air-space *d* to the top of the chamber F. These parts are all of substantially the same construction as the like-lettered parts in my said patent, except in the particulars hereinafter described. The chamber F is arranged wholly below the tank E, with the exception of an upward extension through the tank formed by a tube, F′, to the top of which the vent-pipe *f* is connected. There need be no check-valve in this pipe.

The suction-pipe *e* rises through the chamber F, inside the tube F′, and nearly to the top of the latter, its open upper end being above the water-level in the tank. Inside the tube F′ is fixed a tube or air-bell, *n*, the top of which extends slightly above the top of the pipe *e*, and is closed, and the bottom of which is open and extends nearly to the bottom of the chamber F. Inside of the tube *n*, and between it and the pipe *e*, is placed a pipe, *r*, the upper end of which is open and extends preferably above the water-level in

the tank E, but not so high as the top of the pipe *e*, and the bottom of which extends through the bottom of the chamber F and connects with a passage-way, *s*, formed in a casting, G, which is fastened beneath the chamber. This casting extends to the right, and the outlet-orifice *i*, at the bottom of the chamber, opens into it. Beneath this orifice the flushing-pipe *l* is connected to the casting G. The orifice *i* is surrounded with a pendent flange or short downwardly-projecting tube which depends into the casting G, and this orifice and casting, in connection with the flushing-pipe *l*, form a suction-injector, I, the operation of which causes a suction through the passage (lettered *t*) formed by the tube *r* and passage-way *s*, as will be presently explained.

There is but one valve—the valve *h*—closing the inlet-opening *h'* to the chamber F. This opening should be about three inches in diameter, and the outlet orifice *i* should be about three-fourths or seven-eighths of an inch in diameter, or the two may be of other dimensions in approximately the same proportion. The valve *h* is connected by a stem or chain to a weighted lever, *p*, which keeps the valve normally closed, and is operated to open it by a pull connected to it through a wire or chain, *q*, in any usual manner. The overflow-pipe *m* is shown as passing through the valve *h* and serving as its stem. This pipe is trapped by a cup, *m'*, which incloses its lower end and rises and falls with it.

In my said patent the flushing-chamber F is a sealed chamber, and operates during the flushing to produce a suction in the pipe *e* by means of a vacuum. In my present invention the flushing-chamber is not sealed, and consequently is not a vacuum-chamber, and the suction is produced in great part by the action of the injector I, as will presently be described.

The operation of my invention will be best understood from the diagrams, Figs. 2 and 3. In these the pipe *e* is not shown as passing through the pipe *r*, but for clearness the two are placed side by side, and the bell *n* and upward extension F' are exaggerated. The normal water-level in the tank E is shown by the line *x x*. The parts are shown in Fig. 1 in their normal condition, the chamber F being empty, and the valve *h* closed. When the person using the closet pulls downward on the wire or chain *q*, through the usual pull-handle or other suitable appliance, the valve *h* is lifted and water from the tank E commences to flow rapidly into the chamber F, and immediately thereafter to flow outward through the orifice *i*. Fig. 2 shows the parts in this condition. As the inlet-orifice *h'* has about sixteen times the area of the outlet-orifice *i*, the water enters the chamber F much more rapidly than it can escape from it, and quickly fills the chamber, expelling the air through the tube F' and pipe *f*. By the time the chamber is thus filled the water running out through the orifice *i* and descending the flushing-pipe will commence to flow into the bowl A, and the user hearing it will then naturally release the pull, whereupon the valve *h* will drop back to its seat. The water contained in the flushing-chamber will then continue to flow out through the orifice *i* until the chamber is emptied. Fig. 3 shows the apparatus shortly

23

after the valve *h* is closed. From the time the water entering the chamber reaches the orifice *i* until the chamber is emptied there is a continuous stream of water flowing out through this orifice, falling through the cavity or injector-chamber in the casting G, and flowing down the flushing-pipe. In crossing the cavity in the casting it encounters and carries with it a portion of air, and so creates a partial vacuum in this cavity in the manner common to injectors. This partial vacuum or suction extends up through the passage *t* into the bell *n*, from which it draws the air for an instant, and until the water in the chamber F rises above the bottom end of this bell and so seals it and prevents any further flow of air into it. The rarefaction rapidly increases from that instant, and air is drawn up through the pipe *e* and from the space *d*. The effect of this rarefaction is to siphon the trap C or cause the water to flow over from this trap and fall into the trap D, and this siphoning proceeds rapidly until the water-level in the bowl A is lowered to the outlet-opening *a*, whereupon air enters the space *d* from the bowl and breaks the vacuum. This breaking of the vacuum should occur shortly after the first of the flushing-water reaches the bowl, and thereafter the water enters the bowl and is as rapidly drawn out by the siphoning of the trap, thereby causing a powerful outflow through the bowl and soil-passage, which carries with it the entire contents of the bowl. In the course of this operation the vacuum may be broken several times by entrance of air from the bowl. In any case the rarefaction in the bell *n* will cause the water to rise to a greater height in it than in the chamber F, as shown in Fig. 3, and if the suction is sufficiently strong the water in the bell will be drawn up to the top of the pipe *r*, and will descend through the passage *t*, mixed with air. Thus the water will be drawn from the chamber F to the pipe *l* through two conduits simultaneously. The rarefaction in the bell *n*, pipe *e*, and space *d* will continue until the water in the chamber has so far run out as to unseal the bottom of the bell, whereupon the vacuum is broken finally by the entrance of air into the bell, and thereupon the remaining water will flow into the bowl as an "after-wash," and will fill it up to the level shown, leaving it ready for the next use of the closet. The precise operation will depend upon the proportioning of the parts, as by altering the relative capacities of the trap C, space *d*, pipe *e*, bell *n*, passage *t*, and chamber F, and the relative areas of the orifices *h'* and *i* the operation might be considerably modified.

I have stated that the person using the closet will naturally release the pull when he hears the water pouring into the bowl, and if the parts are so proportioned that when this occurs the chamber F will be filled, the operation will almost invariably be satisfactory. If he should release the pull too quickly, the only result would be a proportionately shorter flush, and if he should hold the pull too long, the flush would be unnecessarily prolonged, the only disadvantage of which would be a waste of more or less water. To prevent the latter contingency a self-seating valve may be used, as the valve *h*. The valve shown in my patent No. 249,577, dated November 17, 1881, will answer the purpose well.

Fig. 4 shows a modification in which a valve of this character is used, in connection with a different lever arrangement. The wire *q* is to be connected to the water-closet seat, and the weight on the lever tends to lift the valve. The parts are shown in full lines in the normal position. When the seat is depressed, the lever is tilted to the position shown in dotted lines, thereby forcing down the piston *v* in the cylinder *w*, which is fixed to the valve *h*. The piston has a cupped-leather packing, which permits the water to escape around it during its downward movement. The parts remain thus until the user rises from the seat, whereupon the lever is tilted by its counter-weight back to its normal position, and the piston *v* is lifted. The piston in lifting carries with it by suction the cylinder *w*, and so lifts the valve *h* to the position shown in dotted lines. The cylinder *w* has a small inlet-conduit or leak-passage, *y*, adjusted by a screw, *z*, and as water slowly enters through this conduit the valve slowly descends, and finally seats itself. The adjustment should be such that the valve will seat itself as soon as the chamber F is filled. In other respects the operation is the same as already described. The overflow-pipe *m* is placed at one side and fixed in place, and its lower end is sealed in a fixed cup, *m'*.

Fig. 5 shows how two valves may be used, the arrangement of
24 the valves and the lever being the same as in my said patent No. 255,485. The outlet-orifice *i* is made larger than in the construction before described, and the valve *j*, fixed to the stem *u'*, works up and down through this orifice and, when lowered, seats itself on the bottom of the casting G, over the orifice *i'*, whence the flushing-pipe leads. The valve *j* nearly fills the orifice *i*, the area of the intervening annular space being about the same as of the orifice *i* in Fig. 1. The two valves are so arranged that when the lever is at midstroke both are seated; but when the lever is at either extremity of its stroke one valve is seated and the other is lifted. The upward extension F' and bell *n* are no longer distinct, and a check-valve, *g*, is interposed between the interior of the bell and the air-pipe *f* leading from its top.

The parts are shown in their normal position. When the seat is depressed, the valve *j* is seated and the valve *h* is lifted. The chamber F is quickly filled through the orifice *h'*, and water flows thence into the bell *n*, the air therein escaping through the valve *g*. Water also flows through the annular opening *i*, and fills the passage *t* to the same level. The chamber F, bell *n*, and passage *t* remain full until the seat is released, whereupon the valve *h* closes and the valve *j* opens. The water from the passage *t* and chamber F then commences to run out into the pipe *l*, the former flowing the more rapidly and instantly producing a suction, which should suffice to lift the water in the bell *n* and cause it to flow down the passage *t*. The water from the chamber F flows out through the annular orifice *i*, and descends through the flushing-pipe, and acts to cause a suction or rarefaction in the same manner as in Fig. 1. This construction causes a more powerful and rapid suction than the other, but I prefer that first described because of its greater cheapness, as its action is practically sufficient.

It will be seen that my present invention introduces a new principle for operating double trapped or siphon water-closets—namely, that of producing the requisite vacuum by causing the falling flushing-water to act as an injector and draw air along with it. I have combined with this means for securing the requisite "after-wash" to refill the bowl at the termination of the flushing, which is practically the same as that set forth in my said patent No. 255,485; but it is not essential that this means of securing the after-wash be used.

The diagram, Fig. 6, is designated to illustrate the essential principle of my present invention even more clearly than the preceding figures. The air-pipe *e* does not enter the chamber F, but is connected by a branch with the flushing-pipe *l* below the chamber, the injector I being arranged at their junction. The valve *g'* is shown merely to prevent water setting back and flowing down the pipe *e*, since the top of this pipe is below the water-level *x x*, instead of above it, as before. No provision for securing an after-wash is here shown, but the bowl may be refilled after the flushing by any suitable means, as by water admitted by a valve through an independent flushing-pipe.

I claim as my invention—

1. A flushing apparatus for water-closets, consisting of a reservoir-tank, a flushing-chamber adapted to be filled therefrom, a valve controlling the admission of water from said tank to said chamber, a suction-injector arranged beneath the outlet from said chamber, a flushing-pipe leading from said injector, and a suction or air pipe communicating with said injector, all combined and arranged substantially as set forth, whereby the water in escaping from said chamber into the flushing-pipe traverses said injector, and sucks the air from said suction-pipe.

2. The combination of a reservoir-tank, a flushing-chamber, a valve controlling the admission of water from said tank to said chamber, a suction-pipe terminating at the upper part of said chamber, an injector beneath the outlet from said chamber, a flushing-pipe leading downward from said injector, and a suction-passage affording communication from said injector to said suction-pipe, substantially as and for the purposes set forth.

3. A flushing apparatus for water-closets, consisting of a reservoir-tank, a flushing-chamber, a valve controlling the admission of water from said tank to said chamber, a suction-injector beneath the outlet from said chamber, a flushing-pipe leading downward from said injector, a suction or air pipe opening into the upper part of said chamber, and a suction-passage extending from said pipe to said injector, whereby the passage of water through said injector into the flushing-pipe will develop a suction in said suction-passage and suction-pipe, in combination with means, substantially as described, for admitting air to said suction passage or pipe, and so breaking the vacuum therein before all the water has escaped from the chamber, whereby an after-wash is secured, all combined and arranged to operate substantially as set forth.

4. In combination, the tank E, the chamber F, provided with

inlet-orifice *h'* and outlet-orifice *i*, the valve *h*, the suction-injector I, the flushing-pipe *l*, the air-pipe *e*, the suction-passage *t*, and the air-bell *n*, substantially as set forth.

5. A flushing apparatus for a water-closet, consisting of the combination of a reservoir-tank, a flushing-chamber provided with an inlet-orifice of large area communicating with said tank, and with an outlet-orifice of contracted area proportioned to the area of said inlet-orifice, substantially as specified, a valve adapted to close said inlet-orifice, an air-pipe opening into said flushing-chamber,
25 and a flushing-pipe leading from said outlet-orifice, all arranged and adapted to operate substantially as set forth.

6. The combination, with tank E and chamber F, of the valve *h* thereof, its stem consisting of an overflow-tube, *m*, and a sealing-cup, *m'*, below the valve, in which cup the lower end of the overflow-tube is immersed, substantially as set forth.

In witness whereof I have hereunto signed my name in the presence of two subscribing witnesses.

JAMES E. BOYLE.

Witnesses:

ARTHUR C. FRASER.
HENRY CONNETT.

26 COMPLAINANTS' EXHIBIT 12. February 24, 1888. Ben. L. Fairchild, Special Examiner.

Filed Jan. 21, 1889.

A. P. SELBY, *Clerk.*

(No Model.)

F. B. HANSON.

WATER CLOSET.

Patented Nov. 25, 1884.

No. 308,358.

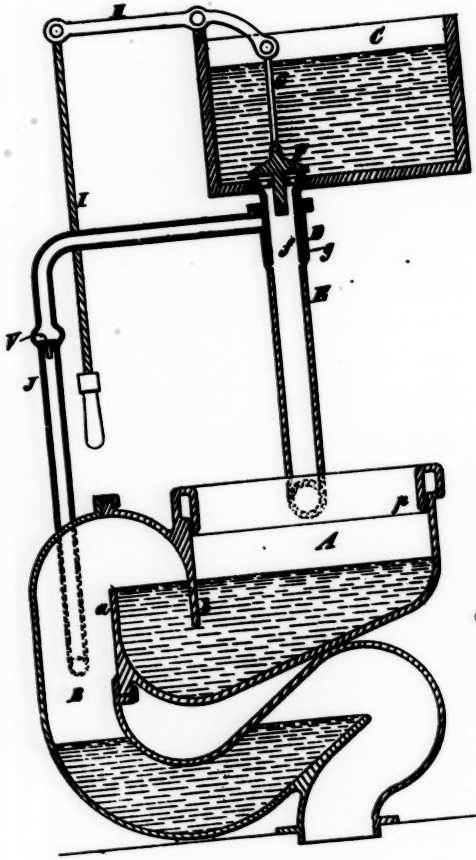

No. 143.
Huber et al.
v.
N. O. Nilson
Mfg. Co.
p. 27

Witnesses:
C. Edmundson
James R. Bowen.

Inventor:
Frank B. Hanson,
by his attorney,
Edwin H. Brown

28 UNITED STATES PATENT OFFICE.

FRANK B. HANSON, of New York, N. Y.

Water-Closet.

Specification forming part of Letters Patent No. 308,358, dated November 25, 1884. Application filed June 12, 1883. (No model.)

To all whom it may concern:

Be it known that I, Frank B. Hanson, of New York. in the county of New York and State of New York, have invented a certain new and useful improvement in water-closets, of which the following is a specification.

In my water-closet the basin is so constructed as to form a stench-trap, and below the basin there is another stench-trap. Between these stench-traps is a pipe extending to an injector, through which the flushing-water passes to the basin. Water passing to the basin, therefore, produces a vacuum below the upper or basin stench-trap and induces the water to flow therefrom into the lower stench-trap.

The accompanying drawing is a central vertical section of a water-closet basin and appurtenances embodying my improvement.

(Here follows diagram marked p. 27.)

A designates a basin, which may be made of earthenware or any other suitable material. It has a side outlet, and at the outlet is provided with an upwardly-extending flange, *a*, and a downwardly-extending flange, *b*. The flange *a* extends above the bottom of the flange *b*. From the outlet of the basin a pipe or passage, B, which may be made of iron or of the same kind of material as the basin, extends downwardly, then upwardly, and then downwardly again, to connect with the waste-pipe of the water-closet. The peculiar form of this pipe or passage causes water to lodge in it to such an extent as to close it or obstruct the passage of gases through it. It therefore forms a stench-strap. The extension of the flange *a* above the lower edge or bottom of the flange *b* causes water to lodge in the basin and forms a stench-trap in the basin, preventing gases from rising from the pipe or passage B into the basin.

C designates a tank containing water for flushing the basin.

D designates an injector connected to the lower part of the tank C.

E designates a pipe leading from the injector D to a passage, *p*, around the upper part of the basin A, and conducting water to this passage. The water is supplied to this passage and escapes around the lower edge into the basin. As here shown, the inner tube, *f*, of the injector is formed with the tank, and the outer tube, *g*, of the injector is formed with the pipe E; but the injector may be entirely separate from the said tank and pipe, and connected thereto by bolts or otherwise. Communication between the tank and the inner tube, *f*, of the injector may be controlled by a valve, F. The

valve shown is a puppet-valve, and its spindle or stem is connected by a link, G, to a lever, H, which is fulcrumed to a stand erected on the tank. The lever H may be operated so as to open the valve F by pulling on a cord, I, which is attached to it so as to hang down near the basin. A pipe, J, extends from that portion of the pipe or passage B which is between the two stench-traps to the outer tube, *g*, of the injector; hence when the valve F is opened and water flows through the inner tube of the injector to the basin, air is drawn through the outer tube, *g*, of the injector from the pipe J, and a partial vacuum formed in that portion of the pipe or passage B which is between the two stench-traps. The water is thus caused to flow under the influence of atmospheric pressure from the upper stench-trap into the pipe or passage B. A valve, V, may be arranged in the pipe J, so as to close the same except when the injector operates to exhaust air from the pipe. The valve shown is a puppet-valve, and seats itself by its gravity for the purpose of closing the pipe. It is raised from its seat to open the pipe by the air which is drawn out by the injector.

What I claim as my invention, and desire to secure by letters patent, is—

1. The combination, with a water-closet basin formed to constitute a stench-trap, a waste pipe or passage leading therefrom, and so constructed as to form a stench-trap, a source of water, a pipe for conveying water to the basin, and an air-pipe leading from the space in the waste pipe or passage which is between the stench-traps, of an injector connected with the said water-pipe and the air-pipe, and serving to produce a partial vacuum in said space by the flow of water through the injector, substantially as specified.

2. The combination, with a water-closet basin formed to constitute a stench-trap, a waste pipe or passage leading therefrom, and so constructed as to form a stench-trap, a water-tank, a water-pipe leading from the tank to the basin, and an air-pipe leading from the space in the waste-pipe which is between the stench-traps, of the injector D, having its inner tube connected with the water-tank and in communication with the water-pipe, and its outer tube in communication with the air-pipe and the water-pipe, whereby the flow of water from the tank through the injector is made to produce a proper vacuum in said space, the valve F, the lever H, connected thereto, and the cord I, substantially as specified.

29

3. The combination, with a water-closet basin formed to constitute a stench-trap, a waste pipe or passage leading therefrom, and so constructed as to form a stench-trap, a source of water, a pipe for conveying water to the basin, and an air-pipe leading from the space in the waste pipe or passage which is between the stench-traps, of an injector connected with the water-pipe and the air-pipe, and serving to produce a partial vacuum in said space by the flow of water through the injector, and a valve in said air-pipe between said space and the injector, substantially as specified.

FRANK B. HANSON.

Witnesses:
T. J. KEANE.
JAMES R. BOWEN.

30 Received for record December 20th, 1881, and recorded in Liber N 27, page 50, of Transfers of Patents.

In testimony whereof I have caused the seal of the Patent Office to be hereunto affixed.

[Seal Patent Office, United States of America.]

V. D. STOCKBRIDGE,
Acting Commissioner.

Ex'd: F. C. T.

COMPLAINANTS' EXHIBIT 13. Feb. 24, 1888. Ben. L. Fairchild, Spec. Examiner.

Assignment.

Whereas Stewart Peters and William Donald, both of Glasgow, Scotland, have invented certain improvements in water-closets patented in Great Britain April 7th, 1874, by letters patent No. 1207, for which they have executed an application for letters patent of the United States;

And whereas they have by an assignment dated October 27, 1881, transferred their entire interest therein to me, James E. Boyle, of Brooklyn, in the State of New York;

And whereas Henry Huber, of the city, county, and State of New York, is desirous of acquiring an interest in the said invention:

Now, therefore, for and in consideration of the sum of one dollar to me paid by said Henry Huber, receipt whereof is hereby acknowledged, I do hereby sell and assign to the said Henry Huber all my right, title, and interest in and to the said invention and any
31 letters patent that may be granted therefor (being the entire ownership thereof) the same to be held and enjoyed by the said Henry Huber, his heirs or assigns, to the full end of the term for which said letters patent may be granted, as fully and entirely as the same would have been held and enjoyed by me if this assignment and sale had not been made.

And I hereby authorize and request the Commissioner of Patents to issue said patent to said Henry Huber as sole assignee.

Witness my hand this twenty-sixth day of November, A. D. 1881.

JAMES E. BOYLE.

Attest: ARTHUR C. FRASER.

[Endorsed:] Peters & McDonald. Bowen. Nov. 29. Assignment. James E. Boyle to Henry Huber. Invention: Water-closet. Patented —— —, 18—. No. —. Burke, Fraser & Connett, solicitors of patents, 37 Park row, New York. Enter. 20. 26. Patent Office, U. S. A., Dec. 20, 1881. Complainants' Exhibit 13. Feb. 24, 1888. Ben. L. Fairchild, spec. examiner. Filed Jan. 21, 1889. A. P. Selby, clerk. 2. #24,792, D.

32 COMPLAINANTS' EXHIBIT 14. February 24th, '88. Ben. L. Fairchild, Special Examiner.

(2–175.)

20153.

DEPARTMENT OF THE INTERIOR,
UNITED STATES PATENT OFFICE.

To all persons to whom these presents shall come, Greeting:

This is to certify that the annexed is a true copy from the records of this office of an instrument of writing executed by Stewart Peters and William Donald October 27, 1881, and recorded in Liber N 27, page 49. Said record has been carefully compared with the original and is a correct transcript of the whole thereof.

In testimony whereof I, Benton J. Hall, Commissioner of Patents, have caused the seal of the Patent Office to be affixed this 30th day of September, in the year of our Lord one thousand eight hundred and eighty-seven, and of the Independence of the United States the one hundred and twelfth.

Seal Patent Office, United States of America.

BENTON J. HALL,
Commissioner.

33 Liber N 27, p. 49.

Whereas we, Stewart Peters and William Donald, both of Glasgow, Scotland, have invented certain new and useful improvements in water-closets, for which we are about to make application for letters patent of the United States; and

Whereas James Edmund Boyle, of the city and State of New York, in the United States of America, is desirous of acquiring an interest in said invention and in the letters patent to be obtained therefor:

Now, therefore, to all whom it may concern, be it known that for and in consideration of the sum of ten pounds st'l'g to us in hand paid, the receipt of which is hereby acknowledged, we, the said Stewart Peters and William Donald, have sold, assigned, and transferred, and by these presents do sell, assign, and transfer, unto the said James Edmund Boyle the full and exclusive right to the said invention, as fully set forth and described in the specification prepared and executed by us, preparatory to obtaining letters patent of the United States therefor; and we do hereby authorize and request the Commissioner of Patents to issue the said letters patent to the said James Edmund Boyle as the assignee of our entire rights, titles, and interests in and to the same for the sole use and behoof of the said James Edmund Boyle and his legal representatives.

In testimony whereof we have hereunto set our hands and affixed our seals this twenty-seventh day of October, A. D. 1881.

STEWART PETERS. [SEAL.]
WILLIAM DONALD. [SEAL.]

In presence of—

PETER FORGIL.
GEORGE H. WAPP.

34 U. S. CONSULATE,
Glasgow, Scotland.

On this twenty-seventh day of October, eighteen hundred and eighty-one, before me, a vice-consul of the United States, at Glasgow, Scotland, personally appeared Stewart Peters and William Donald, to me known to be the individuals described in and who executed the foregoing assignment, and acknowledged that they executed the same voluntarily.

Witness my hand and consular seal this 27th day of October, 1881.

[Seal United States Consulate, Glasgow.]

W. GIBSON,
U. S. Vice-Consul, Glasgow, Scotland.

Recorded Dec. 20th, 1881.

35 [Endorsed:] Complainants' Exhibit 14. Feb. 24, 1888. Ben. L. Fairchild, spec. examiner. Filed Jan. 21, 1889. A. P. Selby, clerk.

36 HUBER, BOYLE
vs.
N. O. NELSON M'F'G CO.

COMPLAINANTS' EXHIBIT 16, SLOW-CLOSING VALVE PATENT. Jno. E. Gavin, Notary Public.

N. Y., Sept. 12, '88.

Filed Jan. 21, 1889.

A. P. SELBY, *Clerk.*

38 UNITED STATES PATENT OFFICE.

JAMES E. BOYLE, of Brooklyn, assignor to Henry Huber, of New York, N. Y.

Tank-Valve.

Specification forming part of Letters Patent No. 249,577, dated November 15, 1881. Application filed June 2, 1881. (No model.)

To all whom it may concern :

Be it known that I, James E. Boyle, a citizen of the United States, residing in Brooklyn, Kings county, New York, have invented certain improvements in tank-valves for water-closets, of which the following is a specification.

This invention relates to a valve for use in connection with water-closets, its principal use being for the flushing of closets from a tank, whereby a service-box is dispensed with. I have shown it in the drawings as adapted to a closet wherein the seat is hinged and the closet is flushed automatically by the operation of the seat.

The novel features of my invention will be definitely set forth in the claims.

(Here follows diagram marked p. 37.)

In the drawings, which serve to illustrate my invention, figure 1 is a general sectional view of the tank, showing the arrangement of the valve on a small scale. Fig. 2 is a longitudinal mid-section of the valve, on a larger scale, showing the parts in their normal positions. Fig. 3 is a view similar to Fig. 2, but showing the valve lifted. Fig. 4 is a plan of the under side of the valve.

Let A represent an ordinary flushing-tank, which may be provided with an ordinary ball-cock to prevent overflow. Secured in the bottom of this tank is an outlet-nipple, B, to which is coupled a pipe, C, which leads to and is connected with the closet-bowl for flushing.

D represents the valve proper, which is seated on a soft or yielding packing ring or seat, *a*, and provided with a guide-stem, *b*, arranged to pass through a guide formed in the nipple B. To the valve D is secured a tube, E, in which is fitted a plunger, F, formed of a cup, of leather or other yielding material, clamped between nuts or plates, as clearly shown in Figs. 2 and 3. This plunger is secured to a stem or rod, G, which may have a guide, *c*, fixed thereon, to cause it to play truly in the tube. The stem G extends upward, and is connected with one arm of a weighted lever, H, pivoted on the tank, or above the same.

I prefer to connect the rod to the lever by passing it through a hole or slot in the lever, and confining it there by means of nuts *d d*, as shown in Fig. 1. To the end of the lever H is affixed a wire, chain, or other connector, *e*, which leads down to the hinged seat of the closet, which is elevated normally by the weight on the lever.

So far as described the operation is as follows: The normal posi-

(No Model.)

J. E. BOYLE.

TANK VALVE.

Patented Nov. 15, 1881.

No. 249,577.

Fig. 2.

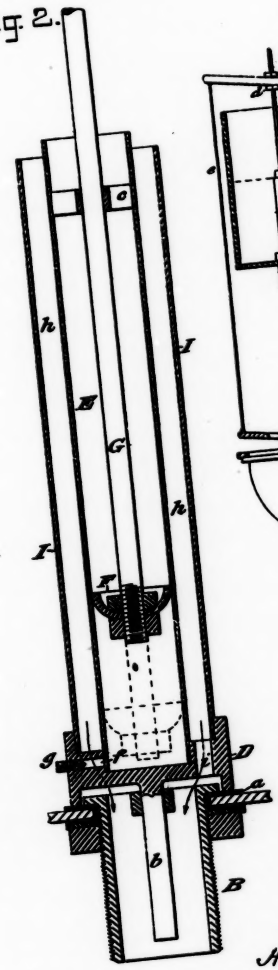

Fig. 1.

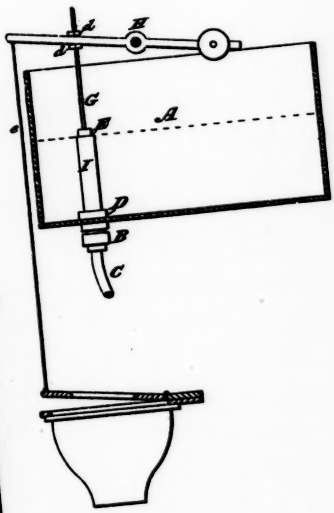

Fig. 3.

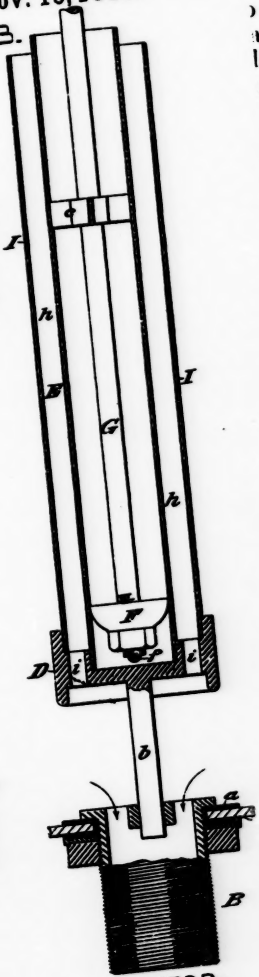

Fig. 4.

No. 143.
Huber et al.
v.
N. O. Nelson
Mfg. Co.
p. 37

WITNESSES:

E. B. Bolton

Geo Bainton.

INVENTOR:

James E. Boyle

By his Attorneys,

Burke, Fraser & Connett

...e seat of
position
...der the
... of the
...and the
...lls, lifts
...e cup-
to lift,
The
...lushes

water
...ovide
in its
... the
then
diffi-
... the
...e cut

the
the
gu-
ive
...ent
be
ar
...ed
e-
se
e
h
e
...

... of the valve will not be

tion of the valve and plunger is shown in Fig. 2. When the seat of the closet is depressed the plunger is pressed down to the position indicated by dotted lines in Fig. 2. If there be water under the plunger when it is depressed it will pass the yielding cup of the plunger. When the weight is removed from the closet-seat and the latter is allowed to rise the weighted end of the lever H falls, lifts the seat, and through the rod G lifts the plunger also; but the cup-shaped plunger produces a vacuum under it when it tends to lift, which causes it to lift the valve off its seat, as shown in Fig. 3. The water from the tank now rushes down through the pipe C and flushes the closet.

If means were not provided for reseating the valve all of the water in the tank would flow out through the pipe C. This I provide against by making a minute hole through the tube E, near or in its bottom, whereby the water from the tank may enter below the plunger and gradually break the vacuum. The valve will then slowly return to its seat. As a very minute hole is somewhat difficult to make, I generally drill a small hole, as at *f*, through the metal of the valve and drive therein a screw, *g*, with a fine groove cut in it longitudinally.

The stroke of the plunger governs the lift of the valve, and the lift of the valve and size of the inlet *f* govern the length of time the valve will remain open. The stroke of the plunger may be regulated by adjusting the nuts *d d* to or from the lever H, so as to give the latter play between them in a well-known way. By adjustment of these nuts the position of the plunger in the tube E may also be regulated. Outside of the tube E, and so as to leave an annular space between them, I arrange an overflow-tube, I, which is secured to the valve D in any good way. This tube extends up to the required level of the water in the tank, and should the water rise above that level from any cause, it will overflow into the
39 annular space *h* between the tubes, out of this space through openings *i* in the valve, (see Figs. 3 and 4,) and thence through the pipe C to the closet. Thus I dispense with a separate overflow and provide for utilizing the overflow to assist in flushing the closet.

The connection of the levers H with the hinged seat of the closet and the connection of the pipe C with closet-bowl present no novel features, and I have not thought it necessary to illustrate them fully. The former, however, is indicated in Fig. 1.

In lieu of the cup-plunger, as described, a plunger having a valve in it opening upward may be employed.

The nipple B may be secured to the tank in a well-known way, as shown.

I may employ the valve without the overflow, but prefer to connect them, as herein shown.

Where pan-closets are employed, or other closets where it is desired to start the flush by pulling a knob or lever, I fix the stem G rigidly in place and connect the valve with the lift. The pull of the operator then lifts the valve, and it slowly seats itself, as before described. If the pull-handle be immediately or promptly lowered by the operator the self-seating function of the valve will not be

materially utilized, but if the handle be kept or left uplifted the valve will shortly seat itself, and thus prevent waste of water. The operation in this case is precisely the same in principle as in the arrangement shown in the drawings.

Having thus described my invention, I claim—

1. A water-waste-preventing valve for water-closets, consisting of a valve proper provided with a tubular upward extension having a minute aperture at or near its bottom, a piston arranged to play in said extension, and a piston-rod adapted to be lifted and lowered during the use of the closet, these elements being combined and arranged substantially as set forth, whereby if the piston be lifted while the valve is seated it will lift the valve with it, and if it be upheld the valve will slowly descend and eventually reseat itself.

2. A tank-valve for controlling the flow of flush-water from the tank to a water-closet, comprising, as its elements, a valve proper to close the water-outlet, provided with a tubular upward extension having a minute aperture at or near its bottom, a piston arranged to play in said extension, and a piston-rod connected with the seat of the closet, whereby when the seat is depressed the piston will be forced down, and when it rises said seat will lift the piston and the valve together, and thus allow the water to flow to the closet until the valve seats itself by gravity, substantially as set forth.

3. A tank-valve for controlling the flow of flush-water from the tank to a water-closet, comprising a valve proper adapted to cover the tank-outlet, provided with a tube having a small opening in it at or near its bottom, a plunger arranged to play in said tube, and a rod or stem, to which said plunger is attached, all arranged to operate substantially as set forth.

4. The combination, with the tank having an outlet in its bottom and a pipe leading therefrom to supply water for flushing a closet, of a valve to close said opening, provided with a vertically-arranged tube having a small aperture in it near the bottom to admit water from the tank, a plunger arranged to play in said tube, a rod to which said plunger is attached, a lever mounted on or above the tank, to one end of which the plunger-rod is connected, and the other of which is weighted, and a closet having a hinged lid, to which the end of said lever is connected, whereby when the seat of the closet is depressed the plunger will be driven down, and when released the weighted lever will lift the valve and plunger together, substantially as set forth.

5. The combination, with the tank having an outlet in its bottom for the escape of water to flush a closet, of the valve D, arranged to close over said opening, and provided with apertures *i i*, the tubes E and I, connected with said valve, the former tube having a minute aperture, *f*, in it near its bottom, the rod or stem C, connected with the lever H, the plunger F, attached to said rod, and the said lever H, all arranged to operate substantially as set forth.

In witness whereof I have hereunto signed my name in the presence of two subscribing witnesses. JAMES E. BOYLE.

Witnesses:

ARTHUR C. FRASER.

GEO. BAINTON.

Huber et al vs N. O. Nelson Mfg Co
Complainants Exhibit No 18
Geo. M. Block
Notary Public

(No Model.)

P. WHITE.

WATER CLOSET OR ANALOGOUS STRUCTURE.

No. 363,566. Patented May 24, 1887.

Fig. 1.

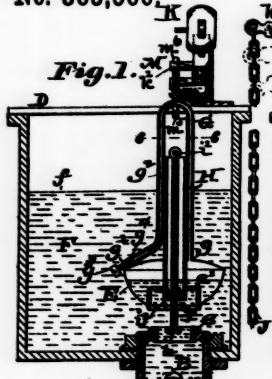

Fig. 2.

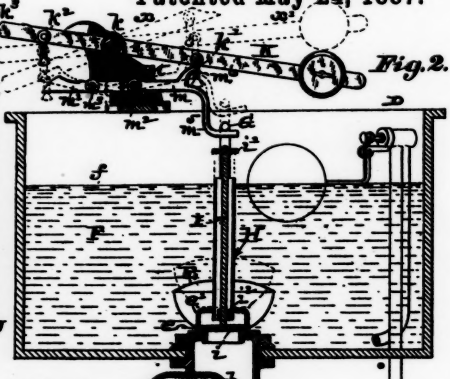

Fig. 5.

Fig. 6.

Fig. 4.

Fig. 7.

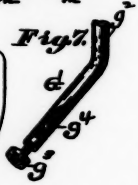

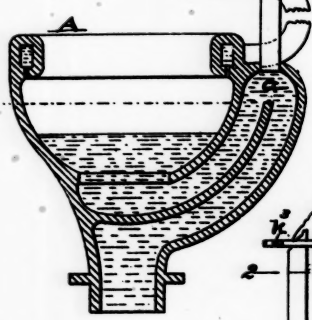

Fig. 3.

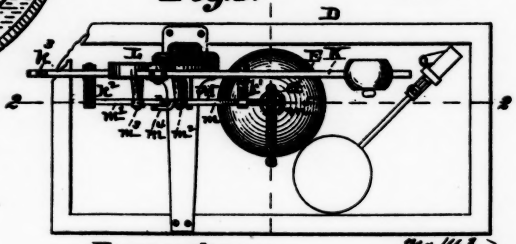

Witnesses:
N. B. Anderson.
J. W. Hoke.

Inventor:
P. White
by C. D. Moody atty

No. 143. Huber et al vs N. O. Nelson Mfg. Co. p. 40

41 UNITED STATES PATENT OFFICE.

PETER WHITE, of St. Louis, Missouri.

Water-Closets or Analogous Structures.

Specification forming part of Letters Patent No. 363,566, dated May 24, 1887; application filed December 27, 1886. Serial No. 222,668. (No model.)

To all whom it may concern:

Be it known that I, Peter White, of St. Louis, Missouri, have made a new and useful improvement in water-closets or analogous structures, of which the following is a full, clear, and exact description:

The improvement relates to the means for discharging and for regulating the discharge of the air from the tank-valve to the overflow-pipe of the tank, and to other minor features, hereinafter described, reference being had to the annexed drawings, making part of this specification, in which—

(Here follows diagram marked p. 40.)

Figure 1 is a vertical section on the line 1 1 of Fig. 3. Fig. 2 is a vertical section on the line 2 2 of Fig. 3. Fig. 3 is a plan of the structure. Fig. 4 is a side elevation of the fore and after wash lever. Fig. 5 is a bottom view of the tank-valve. Fig. 6 is a horizontal section on the line 6 6 of Fig. 1, and Fig. 7 is a view in perspective of the outer end of the tank-valve air-outlet pipe.

The same letters of reference denote the same parts.

A, Figs. 1 and 2, represents the customary bowl of a water-closet whose contents can be discharged by siphonic action, to which end the siphon-pipe B leads from the chamber *a* of the bowl A upward, and at its upper end passing into and pointing downward in the pipe C, which discharges the water from the tank D into the closet-bowl.

All the parts thus far named are of the usual form and operated in the usual manner, saving that the downwardly-pointing end *b* of the siphon-pipe B is provided with a thimble, *b'*, which, by screwing it upward and downward upon the pipe end *b*, can be adjusted to bring the lower edge, b^2, of the thimble farther from or nearer to the shell *c* of the discharge-pipe C, and thus provide for properly regulating the action of the siphon-pipe.

The tank-valve E, which serves to regulate the discharge of the water F from the tank D into the pipe C, is of the hollow type, the water, when the valve is seated, as in Fig. 2, draining from within it into the pipe C, and when the valve is unseated, as in Fig. 1, rising into the valve. As the water enters the valve the air is discharged from the upper part of the interior of the valve, and it is to the manner in which the air is discharged that the present im-

provement in part relates. In a construction patented to me December 14, 1886, the air is discharged from the tank-valve into the water within the tank. There is an opening in the shell of the tank-valve, through which the air escapes, and the water is kept from entering to any undesirable extent through the opening by means of a check-valve. In the present construction, also, the air is discharged from the interior of the tank-valve into the water of the tank, but as follows:

G represents a pipe communicating at g, Fig. 1, with the interior of the tank-valve, and thence leading upward to above the surface f of the water F when the tank-valve is seated, and then turning and extending downward, so as to bring the outer end, g', of the pipe below the surface of the water. The pipe in the shape described may serve incidentally as a means for lifting the tank-valve; but it is more especially desirable for two reasons—no check-valve is required at the outer end of the pipe or elsewhere in it to prevent the water without from passing through the pipe into the tank-valve, for although the outer end of the pipe in some way is made to open into the water of the tank for the air to escape the water cannot rise in the part g^2 of the pipe above the level of the water, and hence cannot pass into the tank-valve; secondly, it makes it practicable to regulate the escape of the air, and thus regulate the closing of the tank-valve. This is accomplished, preferably, as follows: A plug, g^3, is adapted to be screwed into the end g' of the pipe. The farther inward the plug is screwed the more the perforation g^4, Figs. 1, 7, (through which the air escapes from the pipe,) is closed, and the farther outward the plug is screwed the perforation is enlarged accordingly. The larger the perforation the sooner the air can escape and the quicker the tank-valve can seat.

H represents a tube attached to the tank-valve and open at both ends; and it extends upward to bring its upper end above the normal level of the water surface when the tank-valve is
42 seated, and it extends downward through the top of the tank-valve to bring its lower end below the surface of that portion of the water which enters the tank-valve when it is unseated, substantially as is shown in Fig. 1—that is, when the tank-valve is lifted, the water around it at once enters it and seals the lower end of the tube H, so that the air from within the tank-valve cannot pass into the tube; nor can the outer air pass downward through the tube and cause noise as the water is discharged from the tank into the pipe C. The tube remains thus sealed until the tank-valve is again seated, when it operates to vent the pipe C and tank-valve, and then all water within the tank-valve drains downward and the action of the siphon-pipe B is arrested.

I represents a rod serving to guide the tank-valve in its movement. It is fastened by means of the cross-bar i to the valve-seat e, Figs. 1, 2, and it thence extends upward through the tube H, and at its upper end is provided with a stop, i', to limit the upward movement of the tank-valve and tube H. The tank-valve is steadied by means of the bar i^2, which is attached to the tube H and is perforated for the rod I to work in it. The bar i^2 does not close the

tube H against the passage of the air when the tank-valve is seated, as above described. The part e' is an open-work construction, such as a cross-bar, serving to stiffen the lower portion of the tank-valve and tube H. The tube H also serves as an overflow-pipe in the event the water rises too high in the tank.

The seat (not shown) of the closet-bowl, when used, is depressed, drawing upon the connection J, which leads upward from the seat to the weighted lever K, causing the lever to change from its position shown in full lines in Fig. 2 into its position shown in broken lines x, Fig. 2. The lever is pivoted at k to a suitable standard, L, upon the tank, and at the sides respectively of the pivot is provided with the swinging trips k' k^2.

M represents a compound lever, termed the "fore and after wash lever," whose parts m and m' (and respectively at m^2 and m^3) are pivoted to the standard L. The parts m m' have a pin-and-slot connection m^4, by which means and by means of the projections m^5 m^6 upon the part m and the trips k' k^2 upon the lever K the following results are produced: The projection m^5 engages by means of the bent pipe G with the tank-valve. The trip k', when the weighted end of the lever K is down, swings under the projection m^6. When the opposite end of the lever K, by the depression of the closet-seat is depressed, the trip k' acts to start the tank-valve from its seat, thereby providing for what is termed the "fore-wash," whereupon the projection m^6 becomes disengaged from the trip k' and the tank-valve seats. The described movement of the lever K has also brought the other trip, k^2, under the outer end of the part m' of the lever M, and when the pressure upon the closet-seat is removed the end k^3 of the lever K rises, causing the outer end of the lever part m' to rise, and in consequence the outer end of the lever part m also to rise, and thus to again lift the tank-valve and produce what is termed the "after-wash." If it is desired to have the after-wash only, the trip k' can be swung upward, and by any suitable means, (not shown,) permanently or for the time being, disengaged from the lever part m; also, by similarly disengaging the trip k^2 from the other lever part, m', only the fore-wash can be used. The dotted lines x', Fig. 2, indicate another position of the lever M.

Several of the features herein described can be used to a greater or less extent with each other, and also with other mechanism, and they are of special value when united in a water-closet mechanism in the manner set forth.

I claim—

1. In combination with the tank and tank-discharge pipe, the hollow tank-valve having the air-outlet pipe leading upward from the valve to above the water-surface and then downward to beneath said surface, substantially as described.

2. In combination with the hollow tank-valve and the air-outlet pipe leading upward from the valve to above the water surface and then downward to beneath said surface, and perforated, as described, the adjustable plug, substantially as and for the purpose set forth.

3. The combination of the tank-valve, the bent air-outlet pipe ex-

tended upward and downward and perforated, as described, and the connection for lifting the tank-valve, as described.

4. The combination of the tank-valve, the tank, the tank-valve seat, the overflow tube, and the guide-rod within the tube, said overflow-tube being extended upward above the normal level of the water-surface when the valve is seated, and downward through the top of the valve to bring the lower end below the surface of that portion of the water which enters the valve when it is unseated, and said tank-valve being hollow, substantially as described.

Witness my hand.

PETER WHITE.

Witnesses:
C. D. MOODY.
J. W. HOKE.

43

HUBER, BOYLE
vs.
NELSON M'F'G CO.

COMPLAINANTS' EXHIBIT NO. 25, TRAPPED FLUSHING PIPE PATENT.
Jno. E. Gavin, Notary Public.

Sept. 11, '88.

Filed Jan. 21, 1889.

A. P. SELBY, *Clerk.*

(No Model.) 3 Sheets—Sheet 3.

J. E. BOYLE.

WATER CLOSET AND OTHER BOWLS AND PIPE CONNECTION THEREFOR

No. 291,140. Patented Jan. 1, 1884.

Fig. 6.

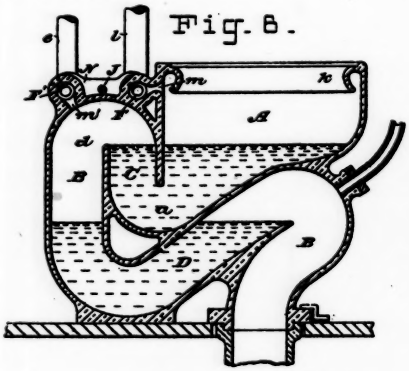

Fig. 8.

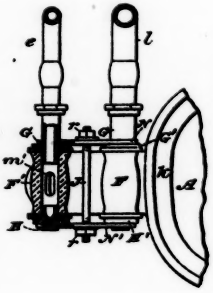

Fig. 7.

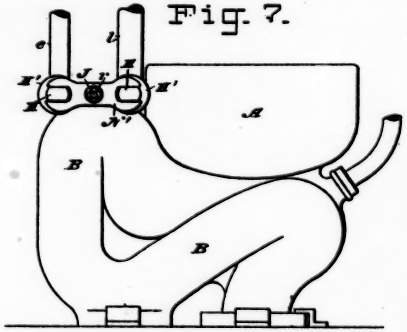

No. 143.
Huber et al.
v.
N.O. Nelson
Mfg. Co.
p. 46

Fig. 9.

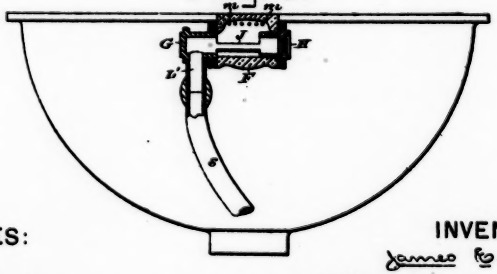

WITNESSES:

J. H. Bolton
Geo. Dawson

INVENTOR:

James E. Boyle

By his Attorneys,

Burke Brown & Bennett

(No Model.) 3 Sheets—Sheet 1.

J. E. BOYLE.

WATER CLOSET AND OTHER BOWLS AND PIPE CONNECTION THEREFOR.

No. 291,140. Patented Jan. 1, 1884.

Fig. 1.

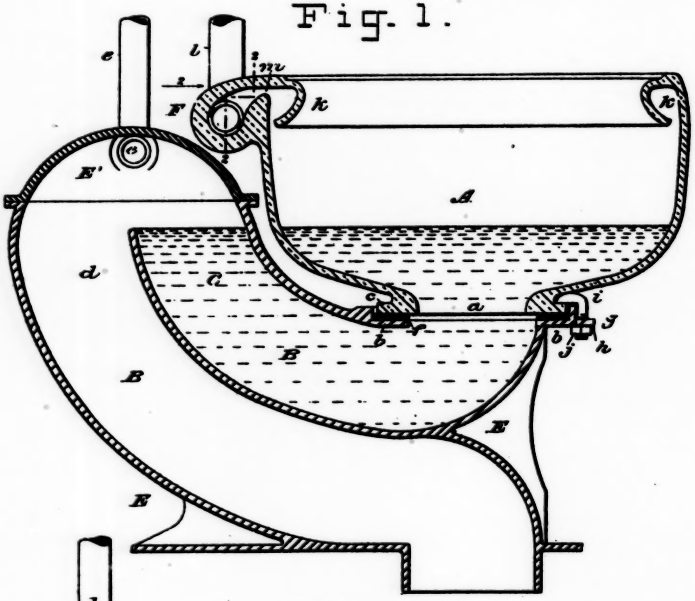

Fig. 2.

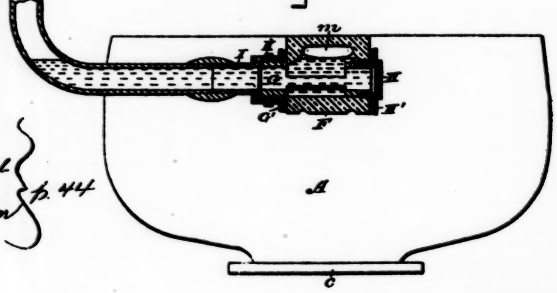

No. 143 Nichols et al & N. A. Nelson Mfg. Co. p. 44

WITNESSES:

E. R. Bolton

E. C. Dawson

INVENTOR:

James E. Boyle

By his Attorneys,

Burke, Fraser & Hamilton

47 UNITED STATES PATENT OFFICE.

JAMES E. BOYLE, of Brooklyn, New York.

Water-Closet and Other Bowls and Pipe-Connection Therefor.

Specification forming part of Letters Patent No. 291,140, dated January 1, 1884. Application filed March 12, 1883. (No model.) Patented in England February 23, 1882, No. 882; in France February 28, 1882, No. 147,614; in Germany March 2, 1882, No. 20286; in Belgium March 18, 1882, No. 57349; in Austria-Hungary May 8, 1882, No. 8083, and in Canada July 3, 1882, No. 31219.

To all whom it may concern:

Be it known that I, James E. Boyle, a citizen of the United States, residing at Brooklyn, in the county of Kings and State of New York, have invented certain improvements in water-closet and other bowls and in pipe-connections therefor, of which the following is a specification.

The principal object of this invention is to provide the earthenware bowls of water-closets or lavatories, or other bowls used in plumbing, with simple and effective means for connecting pipes to them in an air or water tight manner.

Another object is to effect certain improvements in the connections and setting of water-closet bowls.

(Here follow diagrams marked pp. 44, 45, & 46.)

Figure 1 of the accompanying drawings is a vertical mid-section of a water-closet bowl and traps constructed according to my invention. Fig. 2 is an elevation of the bowl and flushing-pipe alone, their connection being in section cut along the line 2 2 and looking in the direction of arrow 2 in Fig. 1. Fig. 3 is a longitudinal mid-section of the connection on a larger scale. Fig. 4 shows the parts forming the connection in elevation. Fig. 5 is a fragmentary transverse section of a portion of the bowl, showing a modified connection. Fig. 6 is a similar section to Fig. 1, showing the application of my connection to a double-trapped closet-bowl. Fig. 7 is a front elevation thereof. Fig. 8 is a fragmentary plan thereof, partly in section, and Fig. 9 is a rear elevation of a lavatory bowl or basin, showing my connection in section applied as the overflow-connection.

In my patent No. 255,485, dated March 28, 1882, I have shown an earthenware water-closet bowl molded in one piece with two successive traps in the soil-passage.

Figs. 6 and 7 of the accompanying drawing show a bowl of the same general construction. This double-trapped bowl is designed to be used where there is no trap in the soil-pipe beneath the floor; but for situations where that trap exists, or where its use is pre-

ferred I have designed the closet-bowl shown in Fig. 1, where but one trap is made in connection with the bowl.

Referring to Figs. 1, 6 and 7, A is the bowl. B is the soil-passage leading therefrom. C is the trap in that passage, by which water is retained in the bowl. D is the second or lower trap. (Not shown in Fig. 1.) *a* is the outlet from the bowl; *d*, the air-space between the two traps; *e*, the suction-pipe leading from this air-space to the tank above, (not shown;) *l*, the flushing-pipe leading down from that tank to the bowl A, and *k* the flushing-rim of the bowl. These parts are all, except as hereinafter specified, constructed substantially as set forth in my said patent, where they are designated by the same letters of reference here applied to them.

I will first describe the construction shown in Figs. 1 to 4. Only the bowl A is made of earthenware. The passage B and trap C are made of cast-iron by preference, because of its cheapness. This iron casting, lettered E, is formed at its connection with the bowl with a flat flange, *b*, on which the bowl rests. The latter is provided at its bottom with a flat flange, *c*.

Between the flanges *c* and *b* a rubber gasket or other elastic packing ring, *f*, is placed, and the two flanges are pressed closely together by screw-clamps *g*, one of which is shown in Fig. 1. The flange *b* is cast with horizontally-perforated ears *h* at intervals, and through each of these a hooked bolt, *i*, is dropped from above, its upper hooked end being turned away from the bowl. After being thus inserted the hooked portion of the bolt is turned toward the bowl, so that it overhangs the flange *c*. A nut is then screwed onto the lower end of the bolt and tightened against the ear *h*, thereby drawing down the flange *c* and compressing the packing *f*. This form of clamp is cheap and strong and cannot slip off. The suction-pipe *e* is connected in any usual way to the casting E, the upper portion E′, of which is preferably cast in a separate piece and united by flanges.

I will now describe the connection between the flushing-pipe *l* and the bowl A, which forms the most important feature of my invention. The bowl A is molded with a cylindrical tubular provision, F, with open ends, which I shall call the "barrel,"
48 on its exterior and near its top. As shown in Figs. 1 and 2, this barrel is arranged horizontally, and its interior communicates through a port or opening, *m*, with the interior of the flushing-rim *k*. The pipe *l* is connected to one end of this barrel and the other end is closed. The connection is made by means of a tubular screw-clamp, the shank or tie of which passes through the barrel. A flanged tube or thimble, G, enters the barrel at one end, and a flanged cap, H, closes the other. The thimble G is preferably made to extend nearly through the barrel, and is cut away at I I, so that its interior may communicate freely with the interior of the barrel. Tie portions or bars J J are thus left, which extend nearly through the cavity of the barrel, and on their end is a tubular screw, J′, onto which the cap H screws. The thimble G is formed with a flange, G′, and a rubber ring or gasket, *n*, is slipped over the thimble against this flange, Fig. 4. The cap H has a flange, H′,

against which is another gasket, *n*. The connection is put together by inserting the thimble G into the barrel F until its flange G′ bears (through the gasket *n*) against the end of the barrel. The cap H is then placed against the opposite end of the barrel, its internally-threaded portion is engaged with the screw J′, and it is rotated to screw it up tightly thereon by means of any suitable wrench. The barrel E is thus embraced with considerable pressure between the flanges G′ H′, a tight joint being made by the intervention of the gaskets *n n*. The pressure upon the barrel is in the direction of its axis, and as its walls are substantially straight from end to end this strain is resisted by them in a direct line, so that a very powerful pressure may be applied without danger of crushing the barrel. The portion *p* of the thimble G projecting beyond the flange G′ is screw-threaded to engage a union-nut, K, by which a spud, L, is pressed against the end of the thimble, a tight joint being made by interposing a gasket, *q*. The lead pipe *l* is joined to this spud L by a wiped joint or in any other suitable manner. Whenever it becomes necessary to disconnect the pipe *l* from the bowl, the nut *k* may be unscrewed, thus separating the spud L from the thimble G.

Fig. 5 shows the barrel F formed upon the bowl A, with its axis vertical, instead of horizontal. In all other respects the construction is the same as already described.

Figs. 6, 7, and 8 show the bowl and traps all made in one piece of earthenware, with two barrels F, one communicating with the flushing-rim *k*, substantially as already described, the other arranged by its side and communicating with the air-space *d*. This latter barrel is lettered F′, and to it is connected the pipe *e*. The two thimbles G G, Fig. 8, are inserted in the rear ends of the barrels F F′, but do not project through them, and the caps H H, which close their front ends, are screw-threaded. There are the same flanges G′ H′ and gaskets *n n*. There is but one tie-bar J to both barrels, and this passes between the barrels, instead of through them. A yoke, N, extends from one thimble, G, to the other, and bears against their flanges G G′. Another yoke, *n*′, extends from one cap, H, to the other, and bears against their flanges H′ H′. The tie-bar or bolt J connects the middles of these two yokes, and by screwing up the nuts *r r* the yokes are drawn forcibly toward each other, thereby pressing the flanges G′ H′ firmly against the ends of the barrels.

Fig. 9 shows my invention applied to a lavatory-bowl, for connecting the overflow-pipe therewith. The overflow-holes *m m* open into the cavity of the barrel, which I have shown as arranged horizontally. The thimble G and cap H are the same as shown in Figs. 3 and 4, except that the thimble has a branch, L′, projecting downwardly, to which the overflow-pipe *s* is connected. The union nut and spud are thus omitted.

Another feature of my invention (shown best in Figs. 1, 2, and 5) consists in forming a trap at the connection of the flushing-pipe *l* with the bowl. This is done in order that such foul gases as may accumulate in the flushing-chamber of the tank overhead may not descend through the flushing-pipe and enter the bowl, thereby

vitiating the air of the room. To this end I make the lower side of the discharge end of the port *m* higher than the upper side of the opening through the thimble G, as shown in Figs. 1 and 2, so that in flushing the closet it is impossible for all the water which descends through the flushing-pipe to reach the bowl, the latter portion being retained in the cavity of the barrel and in the lower part of the flushing-pipe, as clearly shown. In Fig. 5 the same result is secured, the trap being by this construction sealed to a greater depth.

I claim as my invention—

1. A water-closet bowl or other earthenware bowl used in plumbing, provided on its exterior with a hollow tubular barrel molded in one piece with it, having opposite open ends, and with a port or opening through the side of the bowl, affording communication between the cavity of the barrel and the interior of the bowl, substantially as set forth.

2. An earthenware bowl provided with an open-ended cylindrical barrel on its exterior, and an opening extending from its interior to the cavity of said barrel, in combination with a thimble entering one end of said barrel, a cap closing the other end thereof, and a clamp for pressing said thimble and cap forcibly toward each other, thereby embracing the barrel between them, substantially as set forth.

3. The combination, with bowl A, provided with barrel F, of thimble G, having tie-bars J J, screw J′, and screw-cap H, engaging said screw, substantially as set forth.

49 4. The combination, with bowl A, provided with barrel F, of thimble G, having tie-bars J J, screw J′, screw-cap H, union-nut K, and spud L, substantially as set forth.

5. A water-closet bowl formed with a tubular barrel for connecting with the flushing-pipe, and provided with a trap or water-seal at the connection between the pipe and the bowl, whereby the air in the pipe is normally isolated from the bowl, substantially as set forth.

In witness whereof I have hereunto signed my name in the presence of two subscribing witnesses.

JAMES E. BOYLE.

Witnesses:
ARTHUR C. FRASER.
HENRY CONNETT.

[Endorsed:] Filed Jan. 21, 1889. A. P. Selby, clerk.

50 DEFENDANT'S EXHIBIT No. "10." George M. Block, Special Examiner & Notary Public.

{Seal George M. Block, Notary Public, the City of St. Louis, Missouri. Commission expires June 28, 1889.}

Filed Jan. 26, 1889.

A. P. SELBY, *Clerk.*

W. BUNTING, Jr.
Water-Closet.

No. 210,003. Patented Nov. 19, 1878.

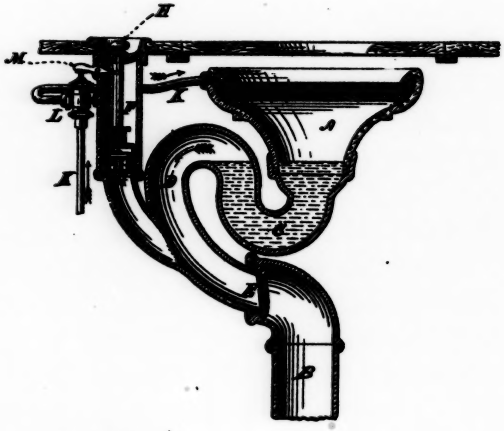

No. 142
Halsey et al.
vs.
N. O. Nelson
Mfg. Co.
p. 51.

Witnesses:
Geo. H. Mantle
S. A. Banks

Inventor.
Wm Bunting Jr
By David A Burr
Atty.

52 UNITED STATES PATENT OFFICE.

WILLIAM BUNTING, JR., of Flushing, New York.

Improvement in Water-Closets.

Specification forming part of Letters Patent No. 210,003, dated November 19, 1878; application filed September 30, 1878.

To all whom it may concern:

Be it known that I, William Bunting, Jr., of Flushing, in the county of Queens and State of New York, have invented a new and useful improvement in water-closets, of which the following is a specification:

My invention relates to a simple and effective device for voiding the bowl or hopper of a water-closet by siphonal action.

It consists in connecting a discharging-siphon with a trap arranged to maintain a proper depth of water in the bowl, and in combining therewith an air-exhausting device and check-valve to produce an exhaust of air from the siphon, and thereby cause an immediate automatic discharge of the contents of the bowl and trap by atmospheric pressure.

In the accompanying drawing—

(Here follows diagram marked p. 51.)

A represents the bowl of a water-closet; B, the soil-pipe; C, a trap, interposed between the soil-pipe and bowl, and so arranged as to maintain a proper depth of water in the bowl, as indicated by the dotted lines in the drawing, and whose outer arm, D, is extended to form the longer leg of a siphon, C D, which is connected to the soil-pipe B; E, a simple valve, so combined with the longer leg, D, of the siphon C D as to close automatically and prevent an upward flow of air into the pipe; F, a piston-cylinder, whose lower end is connected by a suitable short branch pipe with the longer leg, D, of the siphon between its check-valve E and the overflow or sealing-level of the trap; G, a piston, properly packed, and fitted with a rod and terminal knob or pull, H, by means whereof it is operated. K is a water-supply pipe, connected to the upper end of the bowl A in the usual manner, and L a slow-closing automatic valve governing said pipe. M is a short centrally-pivoted lever, whose outer arm bears upon the stem of the valve L, and whose inner arm projects within the upper end of the piston-cylinder F, so as to be struck and thrown up by a lug on the piston-rod when the piston is elevated.

I contemplate connecting the outer end of the lever M, by means of a cord or rod, with a valve or siphon in a flushing box or tank of any approved construction, having suitable connection with the bowl A, so that the movement of the lever M shall produce a discharge from the tank into the bowl whenever the pull H is lifted,

the flushing-tank and valve serving as an equivalent in such case for the supply-pipe K and valve L.

The operation of my improved apparatus is as follows: The trap C being filled with water, the shorter leg of the siphon C D is thereby sealed, while its longer discharge-leg is closed by the valve E. If, now, the pull H be lifted the movement of the piston in the cylinder F will, to the extent of its stroke, exhaust the air in the longer leg, D, of the siphon above the valve, and consequently produce an overflow of the sealing contents of the trap sufficient to bring the siphon C D into action, and thus complete the discharge of the trap and bowl. In the meantime the elevation of the piston will tilt the lever M, cause it to open the supply-valve L, and thus allow a flow of water into the closet-bowl to cleanse it and refill the trap.

A flexible diaphragm or its equivalent may be substituted for the cylinder F and piston G to produce a vacuum or partial vacuum in the siphon C D.

I claim as my invention—

1. The method of producing an automatic discharge of the bowl of a water-closet by exhausting the air from a siphonal discharge-pipe connected therewith, substantially in the manner herein set forth.

2. The combination, with the trap and bowl of a water-closet, of a siphonal discharge-pipe, C D, air-exhausting device F G, and check-valve E, substantially as and for the purpose herein set forth.

3. The combination of the pull H and air-exhausting device F G, operating to produce a discharge of the bowl A and trap C of a water-closet, with a lever M and valve L, operating to supply a flow of water to said bowl, all substantially as and for the purpose herein set forth.

WM. BUNTING, JR.

Witnesses:
DAVID A. BURR.
C. A. LAMONT.

53 DEFENDANT'S EXHIBIT No. "11." George M. Block, Special Examiner & Notary Public.

{ Seal George M. Block, Notary Public, the City of St. Louis, Missouri. Commission expires June 28, 1889. }

Filed Jan. 26, 1889.

A. P. SELBY, *Clerk.*

D. M. Shanley.

Ejecting Pump.

No. 54,615. Patented May 8, 1866.

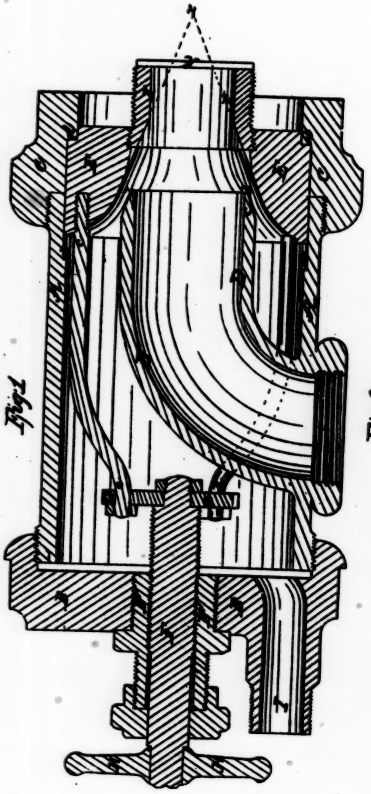

Fig. 1.

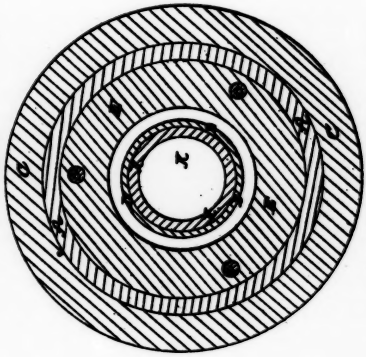

Fig. 2.

No. 143. Huber vs. N. O. Nelson Mfg. Co. } p. 54.

Witnesses.
M. Randolph
A. Wagner

Inventor
D. M. Shanley

55 UNITED STATES PATENT OFFICE.

D. M. SHAPLEY, of St. Louis, Missouri.

Improvement in Pressure-Heads for Siphon and Force Pumps.

Specification forming part of Letters Patent No. 54615, dated May 8, 1866.

To all whom it may concern :

Be it known that I, D. M. Shapley, of the city and county of St. Louis, and State of Missouri, have invented a new pressure-head for siphons and force-pumps; and I do hereby declare that the following is a full, clear, and exact description thereof, reference being had to the accompanying drawings, and to the letters of reference marked thereon.

(Here follows diagram marked p. 54.)

Of the annexed drawings, figure 1 is a sectional elevation of the improved pressure-head. Fig. 2 is a transverse section of same.

The object of this invention is to construct a pressure-head to be attached to any of the force-pumps or siphons now in use, by means of which a much larger volume of water can be thrown to any required distance or elevation, and with far greater economy of power than is now employed for like purposes.

In the case of siphons it is proposed to substitute a current of water or atmospheric air for the present expensive current of steam, to keep the water in motion. It is known to every engineer who has ever used any of the steam-siphons now in use that that is the most expensive mode of raising water that is ever employed, owing to the rapid condensation of the steam as it strikes the cold water in the pipe. The effect of such condensation is to fix a limit—and that a very low one, too, for the amount of steam used—to the volume of water thrown from any steam-siphon. If the same amount of steam now employed by direct pressure to force water through the siphon were used to propel an engine which worked a force-pump that forced a steady stream of condensed air or water through the siphon, the volume of water thrown by said siphon would be increased many times, and in fact would only be limited by the actual working capacity of the steam employed.

By forcing the current of steam, water, or air through an annular opening between conical surfaces which terminate at the point of the discharge of said current of steam, water, or air into the feed-pipe of said siphon, then the said steam, water, or air so forced through between such conical surfaces will continue forward, after leaving the end of said conical surfaces, in the direction thus imparted to it, and the converging sheet of steam, water, or air will meet in a focus at the apex of the cone of which the metal discharge-pipes at the base of the jet form frustums. The air which is contained within the hollow cone thus formed will partially escape by means of friction with the surrounding current, and a partial vacuum will

thus be formed within the cone. Now, if the supply-pipe of the siphon is arranged to discharge into the base of this hollow cone, which by the above-described means has become a partial vacuum, then the water will rise in said supply-pipe by means of the pressure of the atmosphere on the surrounding surface, and the water so raised by atmospheric pressure will be a clear mechanical gain.

To enable those skilled in the art to make and use my improved pressure-head, I will proceed to describe its construction and operation.

I construct of cast metal the cylindrical shell of the chamber A, onto one end of which is screwed the head B and on the other end the annular base-piece C. The supply-pipe D enters one side of the chamber A, and continues, by an easy curve, toward the center of the chamber until the longitudinal axis of the pipe coincides with the longitudinal axis of the chamber.

The pipe D and the chamber A should be cast in one piece, and the discharge end *b* of the pipe should be in the same plane as the base end of the chamber.

The exterior surface of the pipe D, near its *b* end, should be turned off tapering toward the end, so that this end of the pipe will form a hollow frustum of a cone, the apex of which would be at *x*, from one to twenty inches (more or less) in advance of the end of the pipe. The distance of the apex *x* from the end of the pipe will of course vary widely, according to the size of the pipe and the angle of inclination that is given to the sides of the cone.

The orifice of the chamber A should be turned out near its base end so as to receive the valve E. The valve E should be made of brass or other soft metal, and, if not ground into the seat in the end of the chamber A, should be very nicely fitted in in a lathe, and care should be taken to have it rest firmly on its seat at *a* when closed. The valve E is annular in form, and the inner surface of it should be turned out so as to fit nicely up against the con-
56 ical surface of the pipe D. When the valve E is opened it should rest firmly on its seat at *d*. so as to thoroughly close the joint at that place.

The valve-rod F has screw-threads upon it, which fit into threads of the female screw in the stuffing-box F′, the stuffing-box being screwed onto the head B.

A short distance below the head B, and within the chamber A, the valve-rod has a swivel-head, G, from which three or more rods, *c*, pass down on different sides of the pipe D, and the lower ends of them are firmly fastened to the valve E, which they serve to open or shut.

The wheel H is fastened to the upper end of the valve-rod for the purpose of turning the rod. The valve E, then, will be opened or shut by screwing the rod F down or up. When the valve is shut the conical surface within it will fit tightly up against the conical surface of the end of the pipe D within it.

The valve E might, of course, be opened or shut by means of a lever; but the construction above described is considered preferable. In like manner what is now the valve E might be made a stationary portion of the chamber A, and the valve formed by making a

portion of the *b* end of the pipe D movable, so as to slide up on the pipe and thus open the valve. This would be the preferable mode of construction in the case of force-pumps or rams, as the pressure on the end of the valve E in such case might be so great as to preclude the possibility of opening it by the means first herein described.

The supply-pipe I, introduced into the head B, is for the purpose of conducting the current of steam, water, or air into the chamber A.

In case it is desired to use this head for a force-pump or ram, it will be necessary to place the check-valve K below the valve E, so as to retain the water that may be in the pipe outside of or above it in case the operation should be stopped from accident or design.

As has been already described, a current of steam, water, or air may be introduced into the chamber A through the pipe I. Owing to the rapid condensation of the steam as it strikes the water at *b*, it becomes an expensive power. Therefore I propose, by the use of this head, to introduce a current of water or air for the purpose of supplying the motive power.

The valve E being open, and a strong current of water, for instance, introduced into the chamber A through the pipe I, it will be discharged through the annular opening at *b* in a conical jet, which will have its focus at *x*. The air which is in the pipe D will be partially carried out by friction with the jet of water that is forced through the annular opening at *b*, and a partial vacuum will thus be formed in the pipe D, when the water in which it is immersed will rise in the pipe until it comes in contact with the jet of water at *b*, when the whole volume will move forward together.

One great advantage of using water as a motive power in this connection is that the stream of water which is forced through the pipe I may be taken from the same reservoir that supplies the pipe D, which, in the case of wrecking-pumps, will be the hold of the vessel. A very economical arrangement will thus be effected, as the water that supplies the power to do the work will of itself lessen the amount of work to be performed.

Having described my invention, what I claim is—

1. The combination and arrangement of the feed-pipe D and the annular valve E, as herein set forth.

2. The valve E, in connection with the valve-rods F and *c*, or their equivalents, and with the chamber A, when used as hereinbefore set forth.

3. The check-valve K, in connection with the valve E, as hereinbefore set forth.

DAVID M. SHAPLEY.

Witnesses:
M. RANDOLPH.
A. WAGNER.

57 DEFENDANT'S EXHIBIT No. "12." George M. Block, Special Examiner & Notary Public.

{Seal George M. Block, Notary Public, the City of St. Louis, Missouri. Commission expires June 28, 1889.}

through the case *f* and prevent the waste of water while the pull of the closet is held up. The waste-box, however, fills, and upon the valve *l* falling again upon its seat the flexible check descends and allows the contents of the waste-box to flow into the closet and wash the same.

In some cases the waste-box is connected to the cistern by bolts or by lock-nuts on the overflow and supply pipes. In such cases it may not be necessary to employ the frame *t* between the valve-seat and the water-way case *f*.

I am aware that sliding and cylindrical valves have been employed in connection with a tube passing from the cistern through the waste-box. In my improvement the flexible check is operative in the upper contracted portion of the water-way *f*, and it is neither a sliding valve nor a piston, and it only checks the rush of water that would pass to the closet when the valve *l* is raised.

I claim as my invention—

The combination, with the cistern, valve *l*, and stem *i*, of the flexible check *n* and water-way *f*, that is contracted at the upper end, and within which the check *n* operates, substantially as set forth.

Signed by me this 24th day of December, A. D. 1878.

JOHN DEMAREST.

Witnesses:

GEO. T. PINCKNEY.
CHAS. H. SMITH.

[Endorsed:] Filed Jan. 26, 1889. A. P. Selby, clerk.

60 DEFENDANT'S EXHIBIT No. "13." George M. Block, Special Examiner and Notary Public.

{Seal George M. Block, Notary Public, the City of St. Louis, Missouri. Commission expires June 28, 1889.}

Filed Jan. 26, 1889.

A. P. SELBY, *Clerk.*

(2–175.)

DEPARTMENT OF THE INTERIOR,
UNITED STATES PATENT OFFICE.

To all persons to whom these presents shall come, Greeting:

This is to certify that the annexed is a true copy from the records of this office of the letters patent granted James B. Eads July 5th, 1870, number 105,056, for improvement in pumps.

In testimony whereof I, Benton J. Hall, Commissioner of Patents, have caused the seal of the Patent Office to be affixed this 4th day of June, in the year of our Lord one thousand eight hundred and eighty-eight, and of the Independence of the United States the one hundred and twelfth.

Seal Patent Office United States of America.

BENTON J. HALL,
Commissioner.

61 2–155.

No. 105,056.

The United States of America to all to whom these letters patent shall come:

Whereas James B. Eads, of St. Louis, Missouri, has alleged that he has invented a new and useful improvement in pumps, and has made oath that he is a citizen of the United States; that he verily believes he is the original and first inventor or discoverer of the said improvement, and that the same hath not, to his knowledge and belief, been previously known or used; has paid into the Treasury of the United States the sum of thirty-five dollars, and presented a petition to the Commissioner of Patents praying that a patent may be issued therefor:

These are, therefore, to grant to the said James B. Eads, his executors, administrators, or assigns, for the term of seventeen years from the fifth day of July, one thousand eight hundred and seventy, the full and exclusive right and liberty of making, using, and vending to others to be used the said improvement, a description whereof is given in the annexed schedule and made a part of these presents.

In testimony whereof I have caused these letters to be made patent and the seal of the Patent Office to be hereunto affixed.

Given under my hand, at the city of Washington, this [SEAL.] fifth day of July, in the year of our Lord one thousand eight hundred and seventy, and of the Independence of the United States of America the ninety-fifth.

W. T. OTTO,
Acting Secretary of the Interior.

Countersigned and sealed with the seal of the Patent Office.

SAM'L S. FISHER,
Commissioner of Patents.

J. B. Eads.

Sand Pump.

No. 105,056. Patented Jul. 5, 1870.

Fig. 1.

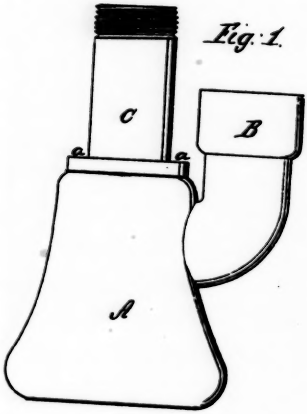

Fig. 2.

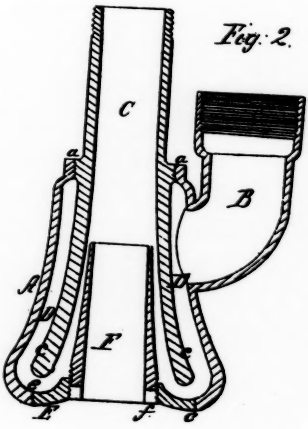

No. 143.
Huber et al
v.
N. O. Nelson
Mfg. Co
p. 62

Fig. 3.

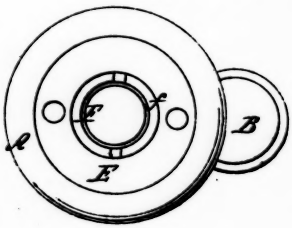

Witnesses;
William W. Herthel
Robert Burns

Inventor;
James B. Eads
by his atty's
Herthel & Co

63 UNITED STATES PATENT OFFICE.

JAMES B. EADS, of St. Louis, Missouri.

Letters Patent No. 105,056, dated July 5, 1870.

Improvement in Pumps.

The schedule referred to in these letters patent and making part of the same.

To all whom it may concern:

Be it known that I, James B. Eads, of St. Louis, in the county of St. Louis and State of Missouri, have made certain new and useful improvements in sand and soil pumps; and I do hereby declare the following to be a full and true description thereof, reference being had to the accompanying drawing and to the letters of reference marked thereon.

This invention relates to pumps for raising sand or other subsoil out of river beds or bottoms, for forming deep channels, or excavations for foundations of bridge-piers, or other purposes.

The nature of this improvement is in the arrangement of a rising pipe or tube, in which an upward current of water is created, of sufficient velocity to draw sand or soil into said pipe and carry the same up in said pipe to be discharged at a proper point above.

To cause said upward current, I arrange a force-pipe, through which, by a suitable pump, water is forced to a head-piece at the lower end of the rising-pipe, said head-piece is properly formed to deflect the incoming fluid, to create the upward current, as required.

To enable those skilled in these arts to make and use my said device, I will now more fully describe the same, referring to the accompanying—

(Here follows diagram marked p. 62.)

Figure 1 as an elevation; to

Figure 2 as a sectional elevation; and to

Figure 3 as a bottom plan, showing the arrangement and connection of the pipes and head-piece in one of the forms in which my said invention may be represented.

I form the head-piece of a body or housing, A, to which the force-pipe, B, connects by suitable joint and inlet-piece. The neck of the head-piece joins, by a screw or flange-joint, with the rising or discharge-pipe C at *a*. The lower end of the pipe C is flared out somewhat conically, following the form of the housing A, and there is formed between the end of the pipe C and the housing an annular chamber, D, into which the water enters from the force-pipe B.

At the bottom of the housing A, I arrange a nut or joint piece, E, having a proper connection with the housing, as shown at *e*, and within said joint-piece I secure the nozzle or inlet-pipe, F. The

nozzle F extends up a suitable distance into the end, *c*, of the pipe C, and, as the upper surface of the joint-piece E forms the bottom of the chamber D, the fluid, as it passes out of this chamber, is deflected to an upward current, around the nozzle F, and passes up into the discharge-pipe C. By the upward current thus produced a vacuum is formed, whereby the exterior fluid of the river, in which the head-piece is placed, is caused to enter the nozzle F, carrying with it sand or soil. The stuff thus raised is carried up the rising-pipe C, and may be discharged at any convenient point.

The head-piece A, and its connecting-pipes, are lowered, as the excavation is carried on, to keep the nozzle F in proper proximity to the subsoil of the water course.

The current of water in the force-pipe B is made by a proper pump, giving a continual stream, the pump being located on a boat, barge, or platform above the water-level.

In order to regulate the velocity of the current in the rising-pipe C, in accordance with the weight and bulk of the sand or soil to be raised, the nozzle F connects by a screw-joint, *f*, with the joint-piece E, so that an operator may move the nozzle F up or down; then, owing to the conicality of the end *c* of the rising-pipe, the opening between the nozzle and the end *c* is made smaller or larger, to increase or diminish the velocity of the upward current in the discharge-pipe. The nozzle F may be turned by a proper wrench, engaging in notches on its lower edge. These notches are indicated in Fig. 3.

A further regulation of the current velocity may be achieved by moving the joint-piece, to thus raise or lower the bottom of the chamber D, and decrease or increase the water-way under the bottom edge of ends *c*.

By the use of my said sand or soil-pump, a lift of any required height may be achieved, and the same is, therefore, applicable to the construction of deep excavations, where ordinary devices would be inefficient.

Having thus fully described my invention,

What I claim is—

The specific device shown and described, with flaring bottom and inclined sides, as described, for the purpose set forth.

JAS. B. EADS.

Witnesses:

GEO. P. HERTHEL, JR.

WILLIAM W. HERTHEL.

64 DEFENDANT'S EXHIBIT No. "24." George M. Block, Special Examiner & Notary Public.

{ Seal George M. Block, Notary Public, the City of St. Louis, Missouri. Commission expires June 28, 1889. }

Filed Jan. 26, 1889.

A. P. SELBY, *Clerk.*

FIG.2. 72810 HUGH H. CRAIGIE.

IMPS. IN CISTERNS FOR WATER CLOSETS

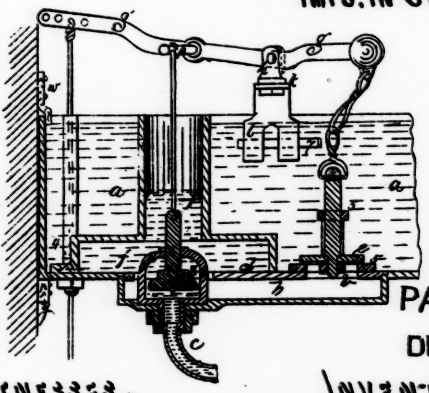

FIG. 3.

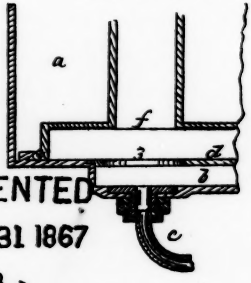

PATENTED

DEC 31 1867

WITNESSES.

Geo. A. Wadkin

Chas. H. Smith

INVENTOR.

Hugh H. Craigie

FIG. 5.

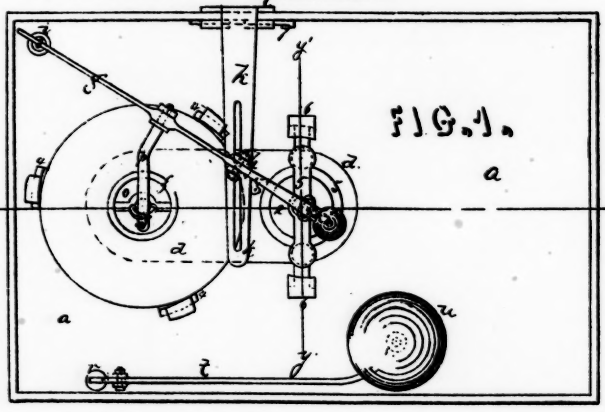

FIG. 1.

FIG 4

No. 143.
Huber Etal.
+
N. O. Nelson
Mfg. Co.
} p. 65.

66 UNITED STATES PATENT OFFICE.

HUGH H. CRAIGIE, of New York, N. Y.

Letters Patent No. 72810, dated December 31, 1867.

Improvement in Water-Supplies for Water-Closets.

The schedule referred to in these letters patent and making part of the same.

To all whom it may concern:

Be it known that I, Hugh H. Craigie, of the city and State of New York, have invented, made, and applied to use a certain new and useful improvement in cisterns for water-closets; and I do hereby declare the following to be a full, clear, and exact description of the said invention, reference being had to the annexed drawing, making part of this specification, wherein—

(Here follows diagram marked p. 65.)

Figure 1 is a plan of said cistern complete.

Figure 2 is a vertical section of the same through the valves and water-way at the line *x x*.

Figure 3 is a section, showing the water-way and service-box, in the form adapted to a pan-closet in which the water is allowed to run at the time the pan is tipped, and continues to run sufficiently to fill the pan after it is returned to place.

Figure 4 is a section of the supply-valve and float, and

Figure 5 is a section through the water-way and its valve at the line *y' y'*.

Similar marks of reference denote the same parts.

Water-closet cisterns have heretofore been constructed with a service-box attached below the bottom. This is difficult to apply, and is unsightly.

The nature of my said invention consists in a cistern, having a water-way in its bottom, covered by a plate introduced from above, and to this water-way, the valve or valves are applied. The service-box is introduced within the cistern, and applied in connection with said water-way, to receive the sudden dash of water, and allow it to run gradually to the closet. The cistern is supplied with water by a valve, that is controlled by a float.

In the drawing, *a* is a cistern, of any desired size and shape; I prefer forming the same of cast iron. *b* is a water-way, formed in the bottom of the cistern, from which a pipe, *c*, passes to the closet, urinal, or other article to be washed by a supply of water. The water-way *b* is covered by a plate, *d*, set flush with the bottom of the cistern in grooves around the edge of the water-way *b*, cement of any suitable character being employed to make the parts tight. The plate *d* has two holes in it, one, 2, for the valve *e*, the other, 3,

for allowing the dash of water, when the valve *e* is raised, to enter the service-box *f*. This box, *f*, is to be of any desired size or shape; I prefer that the same should be round, as shown, with a hollow column, open at top, rising higher than the water-level. This service-box, *f*, is provided with inclined cleats 4, locking under reverse cleats upon the bottom of the cistern. Putty or suitable cement introduced between the service-box and cistern, is employed to make a tight joint.

The seat 5 of the valve *e* is kept down at its ends, by being turned under the overhanging cleats 6, and cemented tightly, as aforesaid. From the seat 5 rises the cage or supports for the stem of the valve *e*.

The lever *g*, that actuates the valve *e*, is set on an adjustable fulcrum, *h*, in the slotted arm *k*, and said arm *k* is formed with a forked bracket, *l*, setting over the edge of the reservoir or cistern *a*, and secured by a wedge, 7, or by a set-screw.

By this construction, the fulcrum of the lever *g* can be accurately placed, so as to be on line with the valve *e* and cord-tube *i*, so that the parts will work correctly, thus avoiding the difficulty heretofore experienced in placing the fulcrum of said lever *g* on a piece of wood nailed to the box forming said reservoir.

Heretofore it has been usual to carry the wire or cord from the lever *g*, down outside the cistern, against the wall of the building; here it is liable to become stopped by grains of sand or mortar. I obviate this difficulty by using the tube *i*, that passes through the bottom of the cistern, and is secured by a flange and nut, the upper end of the said tube *i* being higher than the water-level.

If it is desired that the water run while the valve *e* is raised, at the time of tipping the pan of the closet, then the water will pass through the water-way *b* and pipe *c*, as illustrated by Fig. 3; but, if it is desired to use a hopper-closet and moving seat, and prevent the water being wasted by running while the seat of the closet is depressed and the valve *e* open, then I introduce the valve *o*, operated by an arm, *p*, on the lever *g*, that allows this valve *o* to close as the valve *e* opens, and the reverse, so that when the seat of the water-closet is relieved of pressure and allowed to rise, then the valve *e* closes and the valve *o* is opened to allow the contents of the service-box *f* to run into the closet.

67 In order to supply the cistern I make use of a valve, *r*, at the end of the water-pipe *s*, and *t* is a lever, with a ball or float, *u*, at its outer end, connected thereto by a screw-stem.

This construction enables me to place the supply-entrance below the surface of the water in the cistern; it also causes the water to be thrown off horizontally, or nearly so, to avoid the agitation of water in the cistern, that sometimes makes it dash over the sides or up against the ceiling of the room containing the same. The adjustment of the valve-opening being effected by the screw-stem of the float, there is no motion when the end of that stem rests on the bottom of the cistern, until the water rises and floats the ball, shutting off the supply. By this construction the extended motion usual with float-valves is avoided, because the float remains

stationary, with the valve open to its full capacity, until the cistern is nearly full, while the ordinary valve-float is constantly moving with the rise and fall of water.

In order to sustain the cistern I employ a support, *y*, nailed against the wall, and on which the cistern rests, and apply cleats *w*, that pass inside the upper edge, and are also nailed to the wall. By this construction the bracket and frames usually employed to support the cistern are dispensed with.

What I claim, and desire to secure by letters patent, is—

1. A water-way, *b*, formed in the bottom of the cistern, between the inlet-valve *e* and the outlet-pipe *c*, in combination with a covering plate, introduced substantially as set forth.

2. The valve *e*, seat 5 and supports, constructed as specified, in combination with the cistern *a*, to which it is attached by the ends passing under the cleats 6, as set forth.

3. The service-box *f*, applied inside the cistern, and rising above the bottom thereof, in combination with the supply-valve *e*, substantially as and for the purposes set forth.

4. The service-box *f*, attached as set forth, in combination with the water-way *b* and supply-valve *e*, as and for the purposes specified.

5. The adjustable arm *k* and bracket *l*, for the fulcrum of the lever *g*, in combination with the valve *e* and cord or wire, substantially as and for the purposes set forth.

6. The arm *p*, extending from the lever *g*, in combination with the valves *o* and *e*, as and for the purposes specified.

7. The tube *i*, passed through the bottom of the cistern, and secured by a flange and nut, in combination with the lever *g* and valve, as and for the purposes set forth.

8. The supply-valve or cock *r*, placed in the bottom of the cistern below the water, in combination with the lever *t* and float *u*, adjustable on its stem, as and for the purposes set forth.

In witness whereof, I have hereunto set my signature, this 26th day of September, A. D. 1867.

HUGH H. CRAIGIE.

Witnesses:

GEO. DENNETT WALKER.
CHAS. H. SMITH.

68 DEFENDANT'S EXHIBIT No. "26." George M. Block, Special Examiner, Notary Public.

{ Seal George M. Block, Notary Public, the City of St. Louis, Missouri. Commission expires June 28, 1889. }

Filed Jan. 26, 1889.

A. P. SELBY, *Clerk.*

70 UNITED STATES PATENT OFFICE.

WILLIAM SMITH, of San Francisco, California.

Improvement in Effluvia-Ejectors for Water-Closets.

Specification forming part of Letters Patent No. 190,919, dated May 15, 1877; application filed October 20, 1876.

To all whom it may concern:

Be it known that I, William Smith, of San Francisco, in the county of San Francisco and State of California, have invented a certain new and useful effluvia-ejector for water-closets, of which the following is a description:

My invention relates to an attachment for withdrawing and expelling the effluvia from water-closets when in use, so arranged that the effluvia is sucked or drawn into a receiver and expelled by means of jets of water into an outlet or ventilating chimney.

In order to better understand the nature and object of my invention, reference is made to the accompanying drawings—

(Here follows diagram marked p. 69.)

and to the letters marked thereon, forming a part of the specification, in which a vertical sectional elevation is shown attached to a water-closet in figure 1, and Fig. 2 shows the perforated diaphram detached.

A represents the receiver, which is located at one side of the water-closet, and may be inclosed to its casing and seat. From near the upper end of the receiver extends a curved angular pipe, B, passing under the seat, and extending into the water-closet basin or hopper. The end of this pipe is provided with a flaring mouth, which forms the suction-inlet C. Just above the entrance of this pipe, where it leads into the receiver, is placed a perforated diaphragm, D, through which the water from the cock or valve E above passes into the receiver below. This cock or valve receives its supply of water from the independent pipe F.

Near the lower end of the receiver is placed an outlet-chimney or ventilator, G, through which the effluvia passes as it is forced down by the small jets of water.

In the bottom of the receiver is formed a trap, H, the outlet of which connects with a waste pipe or conduit, H′, which leads into the trap of the water-closet, and thus prevents any effluvia from being received from that source, and also affords an exit for the water passing into the receiver through the perforated diaphragm.

Its operation will be as follows: The piston or plunger I, being operated, admits water from the supply-pipe F into the chamber below the cock or valve, which passes through the perforations or holes *a* of the diaphragm into the receiver in fine jets or spray, which creates a vacuum and sucks the foul air or effluvia from the

W. SMITH.

EFFLUVIA EJECTOR FOR WATER-CLOSETS.

No. 190,919. Patented May 15, 1877.

Fig. 2.

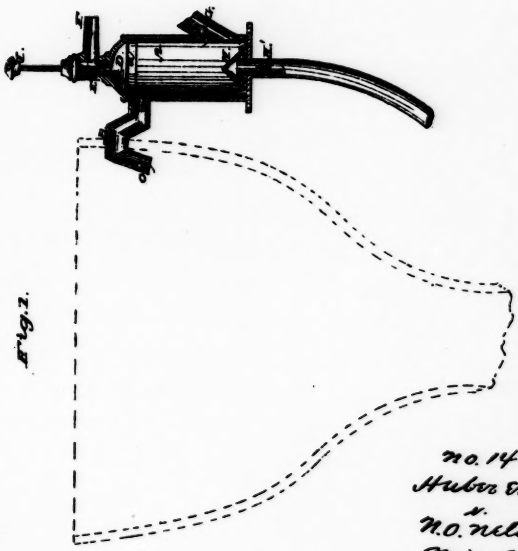

Fig. 1.

No. 143
Huber et al.
v.
N. O. Nelson
Mfg Co.
p. 69.

Witnesses:
W G Anthony
Edward O Osborn

Inventor:
William Smith
By C. W. M. Smith
Atty.

water-closet or bowl, which causes it to rush in through the pipe B to the receiver, when it is forced out into the discharging-chimney or ventilator G. By this means the disagreeable odor so incident to the use of the water-closet is avoided.

Having thus described my invention, what I claim as new, and desire to secure by letters patent, is—

1. In combination with a water-closet, the receiver A, provided with a perforated diaphragm, D, so that water can be received through a cock or valve into the body of the receiver, and create a vacuum to draw the effluvia or foul air into, and eject or force it out of, the receiver, substantially in the manner as herein set forth and specified.

2. The receiver A, provided with a cock or valve, E, perforated diaphragm D, inlet and outlet air and water pipes H′ F G B, when constructed and operating substantially in the manner and for the purpose herein set forth and specified.

In testimony that I claim the foregoing I have hereunto set my hand and seal this 6th day of October, 1876.

WM. SMITH. [L. S.]

Witnesses:

C. W. M. SMITH.
PHILIP MAHLER.

71 DEFENDANT'S EXHIBIT No. "27." George M. Block, Special Examiner, Notary Public.

{ Seal George M. Block, Notary Public, the City of St. Louis, Missouri. Commission expires June 28, 1889. }

Filed Jan. 26, 1889.

A. P. SELBY, *Clerk.*

73 UNITED STATES PATENT OFFICE.

WILLIAM L. HORNE, of Meriden, Connecticut, assignor of four-tenths to P. J. Clark, of same place.

Stop-Cock Injector for Water-Closets, &c.

Specification forming part of Letters Patent No. 261,155, dated July 18, 1882. Application filed March 22, 1882. (No model.)

To all whom it may concern:

Be it known that I, William L. Horne, a citizen of the United States, residing at Meriden, in the county of New Haven and State of Connecticut, have invented certain new and useful improvements in stop-cock injectors for water-closets and the like; and I do hereby declare the following to be a full, clear, and exact description of the invention, such as will enable others skilled in the art to which it appertains to make and use the same.

This invention relates to that class of devices known as "injectors." Its object is to produce an injector which is simple in construction and operation, thus reducing its cost to a minimum. Its further object is to arrange my injector in such relation with the bowl or hopper of a water-closet that the air or gases contained in said hopper will be exhausted therefrom by the action of the injector, and conducted away to a suitable pipe or flue.

To this end the invention consists, first, in a plug for stop-cocks which embodies the principles of an injector; second, in combining such a plug with a stop-cock shell having three or more ways; and, third, in the combination, with a water-closet bowl or hopper, of a stop-cock injector and suitable piping, whereby air or gases may be exhausted from said bowl.

In order that my invention may be fully understood by those familiar with the art, I will now proceed to describe the same with the aid of the accompanying drawings, wherein—

(Here follows diagram marked p. 72.)

Figure 1 is a sectional elevation of my improved injector, the same being shown as connected with a closet-bowl to exhaust air or gases therefrom. Fig. 2 is a sectional view of the injector-cock, drawn to a larger scale. Fig. 3 is a plan thereof. Fig. 4 is a modification, shown in section.

The same letters of reference are used in all the figures to designate identical parts.

The injector is made in the form of a cock, the plug A of which is provided with channels *a a'*, opening into each other at an angle after the manner of a three-way plug. Within the channel *a*, which forms the combining tube of the injector, is formed a nozzle or receiving-tube, a^2, its end terminating a short distance beyond the channel *a'* of the plug. The shell B of the cock is provided with

(No Model.)

W. L. HORNE.

STOP COCK INJECTOR FOR WATER CLOSETS, &c

No. 261,155. Patented July 18, 1882.

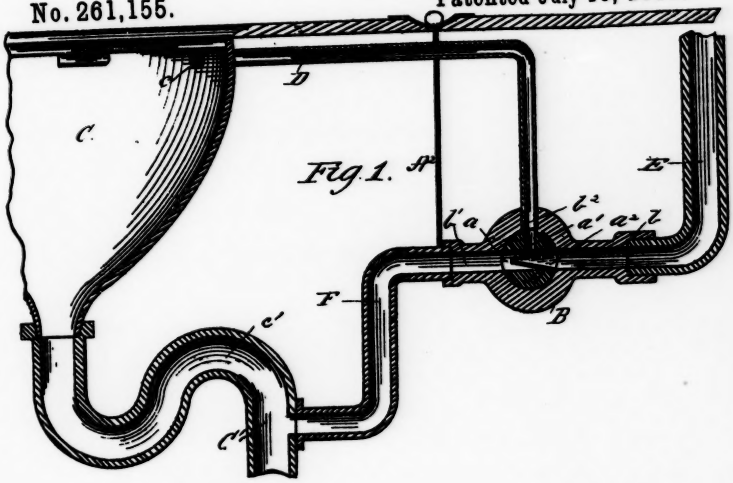

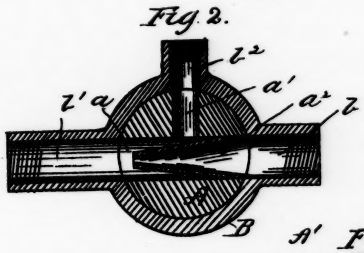

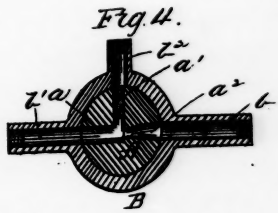

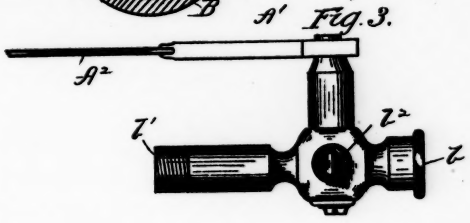

No. 143.
Huber et al
v.
N.O. Nelson
Mfg. Co.
p. 72

Witnesses:
C. L. Hyer
C. A. Neale

Inventor.
William L. Horne
by his attorney
[illegible]

Specific
18

To all
Be it
States,
of Conn
in stop-
declare
inventi
apperta
This
ors."]
structi
further
bowl o
said h
injecto
To t
which
such a
third, i
stop-co
exhaus
In o
miliar
the aid

Figu
same b
gases t
drawn
ificatio
The
nate id
The
is prov
after th
forms t
ceiving
channe

three ways or channels, b b' b^2, with which the channels a a' of the plug are adapted to register, as shown. The plug A may be rotated to close the channels of the shell B.

I have (in Fig. 1 of the drawings) shown my injector-cock as used in connection with a water-closet bowl to draw the air or gases from said bowl, and conduct said air or gases to the soil-pipe. In said figure, C is the bowl or hopper, which may be of any preferred form or material, though I prefer to use the pan-hopper, or one in which the flow of water is stopped while the closet is being used. Near the top of said bowl or hopper C, I provide an aperture, c, for the reception of one end of a small air-pipe, D, the other end of which is connected with the channel b^2 of the injector-shell. A water-pipe, E, which may be a branch pipe leading from the main supply-pipe of the closet, is connected with the channel b of the injector-shell, and the channel b' of said shell is connected with a pipe, F, leading to the soil-pipe C′ of the closet below its trap c'. The plug A of the injector is provided at the exterior of the case B with a lever, A′, to the end of which is secured a rod, A^2, or other suitable means for operating said plug. The plug being in the position shown in the drawings, a jet or spray of water will be emitted with considerable force from the receiving-tube a^2 of the plug into and through the combining-tube a, and so to the soil-pipe C′, thereby creating a suction or draft in the combining-tube and air-pipe D, whereby the air or gases in the hopper C will be exhausted and discharged with the water into the soil-pipe C′. The action of the injector may be continuous, causing a constant exhaustion of air or gases from the hopper; or it may be put in operation only when the closet is in use; and the rod A^2 for operating the injector-plug to shut off or permit the flow of water may be provided with a suitable handle, projecting above the seat of the closet, or be connected to the seat to be operated automatically thereby.

It will be understood that I do not confine myself to the specific construction of the stop-cock injector hereinbefore described, as many modifications could be made in its construction without departing from the spirit of my invention. Fig. 4 of the drawings represents one of such modifications, the receiving-tube or nozzle a^2 in this instance being formed by simply reducing the size of the way or channel. Instead of the pipe F leading to the soil-pipe C′, it may be conducted to any suitable flue.

74

The hereinbefore-described arrangement for exhausting the air or gases from the bowl of a closet and conducting the same to the soil-pipe below the trap might be modified in some minor particulars—as, for instance, the air or branch pipe D or its equivalent might communicate directly with the soil-pipe, and operate in connection with an injector having no cock. The air or branch pipe D should in every instance, however, be provided with a cock to prevent the noxious gases from escaping from the soil-pipe into the bowl when the injector is not in operation.

What I claim as my invention, and desire to secure by letters patent, is—

1. An injector-plug for stop-cocks, consisting, substantially as be-

fore set forth, of a three-way plug, one of the ways of which is provided with an inwardly-projecting nozzle.

2. In a stop-cock injector, the combination, substantially as before set forth, of the shell provided with three or more ways or channels, and the three-way plug, one of the ways of which is provided with an inwardly-projecting nozzle.

3. The combination, substantially as before set forth, of the closet bowl or hopper, the stop-cock injector, and the pipe connections.

4. The combination, substantially as before set forth, of the bowl, the soil-pipe C′, the air pipe or branch, an injector, and a stop-cock for cutting off the air in said branch.

In testimony whereof I affix my signature in presence of two witnesses.

WILLIAM L. HORNE.

Witnesses:

CHARLES W. MANN.
WELCOME E. BENKAM.

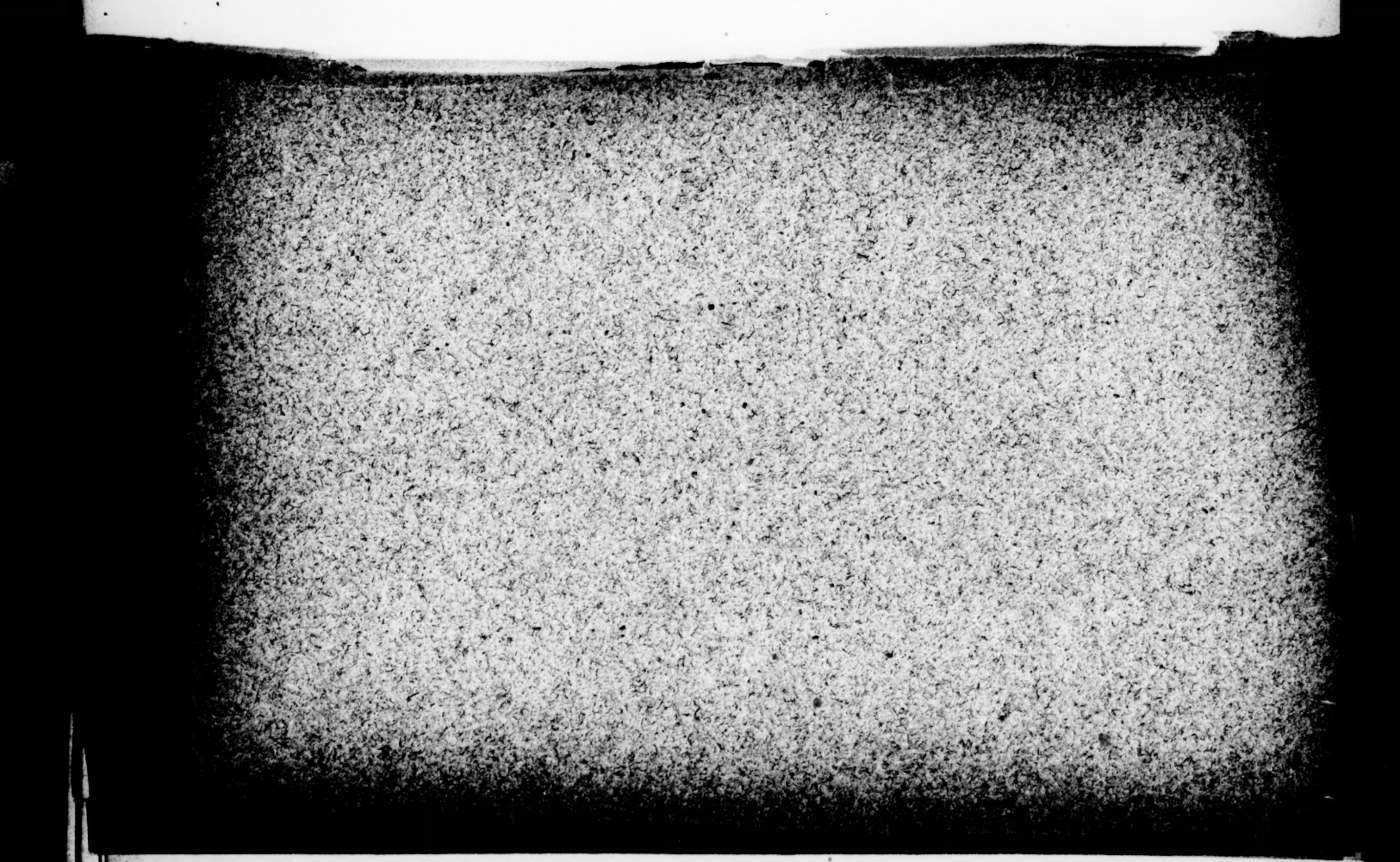

Supreme Court of the United States.

OCTOBER TERM, 1892.

No. 143.

HENRY HUBER AND JAMES E. BOYLE, JR., ADMINISTRATOR OF JAMES E. BOYLE, DECEASED, APPELLANTS,

vs.

THE N. O. NELSON MANUFACTURING COMPANY.

APPEAL FROM THE CIRCUIT COURT OF THE UNITED STATES FOR THE EASTERN DISTRICT OF MISSOURI.

BRIEF FOR APPELLANTS.

I.

GENERAL STATEMENT.

This is an appeal from a decree in equity made on May 25, 1889, by his honor Judge Thayer, dismissing complainants' bill. (38 Fed. Rep., 830.)

The bill charged the defendant, The N. O. Nelson Manufacturing Company, with the infringement of letters patent of the United States No. 260,232, granted to the appellant Henry Huber as assignee by mesne assignments of Stewart

Peters and William Donald, and of reissued letters patent No. 10826, granted to James E. Boyle, one of the complainants below, now deceased. James E. Boyle, Jr., appears in this court as administrator of James E. Boyle, who has died during the pendency of this appeal.[1] Both of the patents in suit are for improvements in sanitary water closets.

Henry Huber is the sole owner of the Peters and Donald patent No. 260,232 by virtue of assignments to him,[2] and he is also the sole and exclusive licensee[3] under the Boyle reissue patent No. 10826, the legal title to which remained in James E. Boyle during his lifetime.[4]

The bill was dismissed below as to the Peters and Donald patent on the ground that it was void by reason of the forfeiture of a prior British patent on the same invention, and as to the Boyle reissued patent on the grounds that it was illegally expanded to cover what had been abandoned by

---

NOTE 1.—Order of substitution is dated October 11, 1892.

NOTE 2.—The assignments are in evidence. See *Exhibits*, pages 27, 28.

NOTE 3.—The license agreement is in evidence. See *Record*, page 134.

NOTE 4.—That there was and is proper joinder of complainants (appellants), and that the defendant (appellee) is estopped by laches in raising the question of joinder, see decision of the court below on the defendant's (appellee's) motion for leave to withdraw answer and file a demurrer, reported in U. S. Patent Office Official Gazette, vol. 44, page 234. The decision of the court below was as follows:

> "This is a proceeding in equity. After the issues had been made up and the complainants had made their *prima facie* case, the defendants appeared and asked leave to withdraw their answer and file a demurrer to the bill on the ground that Huber and Boyle were improperly joined as complainants.
>
> "I have looked at the bill and it appears that Henry Huber and Boyle, the complainants, are each the owner of a patent for an improvement in different parts of the same machine or piece of mechanism. The bill shows that Huber is also a licensee under the Boyle patent, and, as such licensee, has the right to make, use, and sell the invention covered by the Boyle patent throughout the United States.

Boyle, and that there was no inadvertence, accident, or mistake in the failure to properly claim the invention in the original patent.

Since the questions to be discussed in reference to the two patents in suit are entirely distinct, all of the statement and argument in reference to the Peters and Donald patent will be presented in the following pages before taking up the Boyle reissued patent.

THE PETERS AND DONALD PATENT.

II.

STATEMENT IN REFERENCE TO THE PETERS AND DONALD PATENT.

Prior to August 5, 1881, James E. Boyle (one of the complainants below, now deceased) had made an invention in reference to water-closets, and on that day filed an application

---

It furthermore appears that he is engaged in the manufacture and sale of a machine or piece of mechanism that embodies both his own invention and that of Boyle, the two inventions being susceptible of conjoint use. The bill also shows that the defendant is engaged in selling a machine or piece of mechanism which is claimed to be an infringement upon the claims both of Huber and of Boyle under their respective patents. Now, on this state of facts I am of the opinion that the leave to withdraw the answer and file the demurrer because of a misjoinder of parties plaintiff should be denied for the following reasons: In the first place, the motion comes too late, after the issues have been made up and the complainants have made their *prima facie* case. In the second place, it does not appear to me that any harm will be done to the defendants in allowing both of the complainants (who are now complainants) to remain parties to the proceeding; and in the third place, it does not appear to me at all clear that a demurrer would be tenable upon the facts which I have stated, even if the answer was withdrawn and the demurrer was filed. It seems to me probable that both complainants may lawfully join in the bill. It appears to me there are some reasons shown by the bill why both of these complainants should remain parties to the proceeding."

That the complainants (appellants) are properly joined, see further *Huber et al.* vs. *Myers Sanitary Depot*, 34 Fed. Rep., 473; *Clement Co.* vs. *Upson Co.*, 40 Fed. Rep., 473.

for letters patent of the United States.[5] The principal claims in this application were rejected in the Patent Office upon British patent No. 1207 to Peters and Donald, of Glasgow, Scotland, dated April 7, 1874. Thereupon Boyle, in the interest of himself and of Henry Huber (one of the present appellants), went to Great Britain for the purpose of purchasing from Peters and Donald their invention and the right to patent the same in the United States. Boyle was successful in his mission and secured an assignment, dated October 27, 1881, of the invention to himself and an application for letters patent of the United States duly executed by Peters and Donald. On his return to the United States Boyle made an assignment of the Peters and Donald invention to Huber on November 26, 1881, and on November 29, 1881, the application for letters patent of the United States was filed. The letters patent in suit, No. 260,232, were granted on this application June 27, 1882, to Henry Huber "subject (as recited in the patent) to the limitation prescribed by section 4887, Revised Statutes, by reason of English patent, dated April 7, 1874, No. 1207."[6]

The said British patent No. 1207 had been granted to Peters and Donald for a term of fourteen years from April 7, 1874, subject (amongst other conditions) to the payment of a tax of fifty pounds at the end of the third year and a further tax of one hundred pounds at the end of the seventh year. In case of the failure to pay either of said taxes the laws of Great Britain then in force and the patent itself pro-

---

NOTE 5.—The patent No. 255,485, subsequently granted March 28, 1882, with restricted claims is in evidence. *Exhibits*, page 14.

NOTE 6.—The evidence touching the facts stated in this paragraph will be found at pages 115 to 117, *Record*, and pages 1, 27, 28, *Exhibits*.

vided that "these our letters patent and all liberties and advantages whatsoever hereby granted shall utterly cease, determine, and become void, anything herein contained to the contrary notwithstanding."[7] The third-year tax of fifty pounds was paid on the Peters and Donald British patent, but the seventh-year tax was not paid.[8] Accordingly, on April 7, 1881, the Peters and Donald British patent became forfeited and void. The evidence does not show by whose default the British patent of Peters and Donald thus became void, nor who was the owner of the patent at that time. The naked fact is in evidence that on April 7, 1881, while the term for which the British patent was granted had yet seven years to run, the British patent became forfeited. Within seven months after this date of forfeiture, to wit, on October 26, 1881, Peters and Donald sold their rights to a patent in the United States on the same invention, and an application was filed in their names November 29, 1881.

The question here to be determined is whether under these circumstances Peters and Donald had a legal right to apply for and obtain letters patent of the United States.

III.

ERRORS IN THE OPINION OF THE COURT BELOW IN REFERENCE TO THE PETERS AND DONALD PATENT.

The court below decided adversely to the validity of the Peters and Donald patent by reason of the interpretation placed upon the opinion of this court in *Bate Refrigerating*

NOTE 7.—Extracts from the British patent law are set forth in the answer (see page 14 of the *Record*) and are conceded to be correctly recited.

NOTE 8.—See pages 145, 377, 378, *Record*.

Co. vs. *Hammond*, 129 U. S., 151. The grounds of the decision of the court below sufficiently apppear from the following extract:

> "The Supreme Court has clearly discarded the doctrine that an American patent must necessarily have a fixed term, which may be definitely ascertained at the time letters patent are granted, by holding * * * that the duration of an American patent is dependent upon circumstances that affect the duration of the foreign monopoly. Thus the court say:
>
> "'Under section 4887, although * * * the United States patent may on its face run for seventeen years from its date, it is to be so limited by the courts, as matter to be adjudicated on evidence *in pais*, as to expire at the same time with the foreign patent.'
>
> "And again:
>
> "'Under this view the time of the expiration of the foreign patent may be shown by evidence *in pais*, either by the record of the foreign patent itself, showing its duration, or other proper evidence; and it is no more objectionable to show the time of the expiration of the foreign patent by giving evidence of extensions such as those in the present case, and thus show the time when by virtue of such extensions the United States patent will expire.'
>
> "In accordance with such views, the court held that although an American patent had been granted subsequent to the issuance of a Canadian patent which on its face purported to be a grant 'for a period of five years,' yet the American patent did not expire at the end of the five years so limited, inasmuch as the patentee, in compliance with Canadian law, obtained an extension of the foreign patent for two additional terms of five years each after the grant of the American patent. The arguments used in the course of that decision lead logically to the conclusion that United States patents issued subject to the provisions of section 4887 remain in force no longer than the foreign patent having the shortest term; that the life

of the domestic patent is measured by the actual duration of the foreign patent, and may be abridged as well as lengthened by circumstances which operate under the foreign law to abridge or lengthen the foreign monopoly.

"When it is conceded that it is not essential that the life of an American patent shall be absolutely fixed at its inception, as by the term expressed on the face of the foreign grant having the shortest term, but may extend beyond that period in consequence of the extension of the foreign patent by acts *in pais* done by the patentee in compliance with the foreign patent law, that is a concession that the duration of the domestic patent is dependent in one respect on the life of the foreign patent; and, if dependent in one respect, it ought to be regarded as dependent upon it in all respects. At all events, if acts done by the patentee in conformity with the foreign law operate to extend the foreign patent beyond the term specified on the face of the original grant, and thereby to prolong the American patent, by parity of reasoning an omission to do acts required by the foreign law which works an absolute forfeiture of the foreign grant ought to extinguish the domestic patent. No valid reason can be assigned, I apprehend, why the omission of acts required to be done by the foreign law in order to preserve the life of the foreign patent should have no effect on the duration of an American patent issued under section 4887, so long as acts done by the patentee in compliance with the foreign law are allowed to give the American patent a duration that it would not otherwise have. The whole controversy seems to hinge on the question whether the term of the domestic patent is fixed at its inception by the terms expressed on the face of the shortest foreign patent, or whether the life of the American patent may be to an extent uncertain and is subject to contingencies affecting the life of the foreign patent. The Supreme Court of the United States appear to have adopted the latter view. It follows, of course, that if the true construction of section 4887 is that a patent subject to its provisions becomes void when the foreign patent lapses—in other words, if the life of the

> domestic patent is dependent upon that of the foreign patent—then the Commissioner of Patents has no authority under section 4887 to issue American letters after the foreign patent has ceased or determined. It would hardly be contended, I suppose, that the Commissioner would be authorized to grant a monopoly of an invention after an event has occurred that in law determines the duration of the monopoly, and which event, if it had occurred after the grant was made instead of before, would at once have rendered the same void. Commissioner Fisher in the *Case of Mushet*, 2 Com. Dec., 106, shortly after the passage of the act of July 8, 1870, held that section 4887 was intended to allow foreign inventors to secure a monopoly of their inventions in this country after they had been patented abroad, but only for so long a period as the foreign monopoly continued; and that to a casual reader would seem to be the obvious purpose of the statute. The last clause of the section—'but every patent granted for an invention which has been previously patented in a foreign country shall be so limited as to expire at the same time with the foreign patent,' etc.—presupposes, as I think, that there is a foreign patent for the invention in force when the American patent issues, the actual existence of which foreign patent is to determine the duration of the domestic patent. If there is no such foreign patent in force when the American patent issues, but if a foreign patent has been theretofore granted for the invention and it has lapsed and become void, there is no authority in law, in my opinion, for the American grant. The result is that the Peters and Donald patent is adjudged to be void."

The gist of this decision is found in the answer of the learned circuit judge to the proposition thus stated by himself:

> "The whole controversy seems to hinge on the question whether the term of the domestic patent is fixed at its inception by the terms expressed on the face of the shortest foreign patent, or whether the life

> of the American patent may be to an extent uncertain, and is subject to contingencies affecting the life of the foreign patent."

It is respectfully submitted that the learned judge erred in his interpretation of *Bate Refrigerating Co.* vs. *Hammond*, 129 U. S., 151; that there is nothing in the statute which admits of the view that the duration of the United States patent is to be limited by anything but the duration of the legal term of the prior foreign patent, or that it is to be limited by any lapsing or forfeiture of any portion of the term of such foreign patent by means of the operation of a condition subsequent to the grant of the foreign patent according to the foreign statute; that section 4887 Rev. Stat. manifestly assumes that the patent previously granted in a foreign country is one granted for a definite term, and that the meaning of the statute is that the United States patent, if limited at all, shall be so limited as to expire at the same time with the expiration by lapse of time of the term of the foreign patent. And it is hence respectfully submitted that the learned judge erred in adjudging the Peters and Donald patent to be void *ab initio*, and to have been granted without authority of law, since the term for which their British patent was granted did not expire by lapse of time until April 7, 1888, and hence the term of the patent in suit, granted June 27, 1882, could not have expired by operation of the statute any earlier than April 7, 1888. And since the bill of complaint herein was filed, October 3, 1887, the prayers thereof should have been granted.

IV.

Brief of the Argument in Reference to the Peters and Donald Patent.

(*a.*)—ITS TERM.

The issue presented in respect of the Peters and Donald patent arises under section 4887 of the Revised Statutes, by reason of the fact that Peters and Donald had secured a British patent (granted for a term of fourteen years), which patent had ceased and become void for non-payment of the 100-pound tax some eight months before the United States patent was applied for.

The defendant contended and the court below held, that the United States patent was void *ab initio* by the operation of section 4887, the theory being that because the British patent, being then no longer in force, had then no term to run, the United States patent could not be granted or would expire with its grant.

It is now settled by the recent decision of this Court in *Pohl* vs. *Anchor Brewing Co.* (134 U. S., 385) that the term of the United States patent is not shortened "by any lapsing or forfeiture of any portion of the term of such foreign patent by means of the operation of a condition subsequent according to the foreign statute."

It is certain, therefore, in any view of the statute, that the United States patent of Peters and Donald would run at least to the full end of the term for which the British patent was originally granted (that is, to April 7, 1888), and that the appellee is liable for its infringement.

The decision of his honor Judge Thayer in the present case was rendered May 25, 1889. Shortly thereafter the case of *Pohl* vs. *Anchor Brewing Co.* (39 Fed. Rep., 782), involving a state of facts very similar to those in the present case, was heard before his honor Judge Wallace, in the circuit court for the southern district of New York, who, on August 7, 1889, rendered a decision in which he followed Judge Thayer's decision in the present case. Referring to the decision of this court in *Bate Refrigerating Co.* vs. *Hammond* (*supra*), Judge Wallace said:

> "But, in the absence of any such suggestion, and by the extracts which have been given, it seems plain that the Supreme Court has not acceded to the interpretation adopted in the previous adjudications, as well those not referred to in the opinion as those that were. The opinion cannot be reconciled with the view that the statute intends that the United States patent shall have a fixed term, ascertainable when it issues by reference to the term of a foreign patent. It does not attach any significance to the word 'term' as defining the period of duration of the foreign patent or of expiration of the United States patent, but treats that period as one to be ascertained *de hors* the foreign patent by evidence *in pais*, and without reference to any supposed inconvenience or uncertainty to the public or the patentee which may ensue in consequence of their ignorance whether the patent is or is not in life. The statute is capable of the meaning that the exclusive right to the invention here is to cease with the exclusive right of the patentee in any foreign country, or of the meaning that it shall continue to exist for such period, not exceeding 17 years, as coincides with the shortest term of any foreign patent. The Supreme Court seems to have adopted the first of these meanings. This is the view of the decision expressed in the recent case of *Huber* vs. *Manufacturing Co.*, 38 Fed. Rep., 830, and is the construction of the statute adopted by the Com-

> missioner of Patents shortly after the passage of the act of July 8, 1870, in which the section first appears in *Case of Mushet*, 2 Com'r's Dec., 106. The conclusion thus reached is contrary to the impressions entertained at the argument of the plea, but a careful reading of the opinion of the Supreme Court constrains the conclusion that the plea must be held to be good."

On appeal this Court reversed the circuit court in *Pohl* vs. *Anchor Brewing Co.*, and in the opinion rendered showed that Judge Wallace in the *Pohl* case and Judge Thayer in the case at bar had completely misinterpreted the decision of this court in *Bate* vs. *Hammond*. Referring to Judge Thayer's decision in the present case, the court say:

> "This decision was made on the interpretation which the court gave to the case of *Bate Refrigerating Company* vs. *Hammond*."

The interpretation which is here referred to is thus stated in the opinion of the court below:

> "The Supreme Court has completely discarded the doctrine that an American patent must necessarily have a fixed term, which may be definitely ascertained at the time letters patent are granted."

And the decision of this Court in the *Bate* case is interpreted to mean that—

> "The life of the American patent is measured by the actual duration of the foreign patent, and may be *abridged* as well as lengthened by circumstances which operate under the foreign law to abridge or lengthen the foreign monopoly."

In *Pohl* vs. *Anchor Brewing Company* this Court reaffirm the doctrine which Judge Thayer erroneously supposed had been discarded in the *Bate* case, and distinctly declare that

under no circumstances is the duration of the United States patent to be curtailed "by any lapsing or forfeiture of any portion of the term of such foreign patent by means of the operation of a condition subsequent according to the foreign statute." The Supreme Court further say:

> "The statute manifestly assumes that the patent previously granted in a foreign country is one granted for a *definite term*, and its meaning is that the United States patent shall be so limited as to expire with *such term* of the foreign patent."

The Court further show that their decision in the *Bate* case is entirely consistent with this doctrine, the ground of its decision in that case being that the Canadian patent *had* a fixed and definite term, and that its term was "at all times a term of fifteen years' duration."

It needs no argument from us, therefore, to show that the court below erred radically in its interpretation of the decision of this Court in the *Bate* case. Every line of Judge Thayer's opinion (so far as it relates to the Peters and Donald patent) shows that he had reasoned to a conclusion diametrically opposed to that of this Court. He says:

> "At all events, if acts done by the patentee in conformity with the foreign law operate to extend the foreign patent beyond the term specified on the face of the original grant, and thereby to prolong the American patent, by parity of reasoning an omission to do acts required by the foreign law, which works an absolute forfeiture of the foreign grant, ought to extinguish the domestic patent."

The court below fairly states the issue there presented in these words:

> "The whole controversy seems to hinge on the question whether the term of the domestic patent is

> fixed at its inception by the terms expressed on the face of the shortest foreign patent, or whether the life of the American patent may be to an extent uncertain, and is subject to contingencies affecting the life of the foreign patent."

Having thus stated the issue, the Court decides it as follows:

> "The Supreme Court of the United States appear to have adopted the latter view."

We know now, from the opinion of this Court in the *Pohl* case, that Judge Thayer was altogether mistaken. Clearly, then, the court below erred in holding that the Peters and Donald patent was void *ab initio* because their British patent for the same invention had become forfeited prior to the grant of the U. S. patent.

The learned judge of the circuit court in applying the provisions of section 4887 says it is immaterial whether the forfeiture of the prior foreign patent occurs before or subsequent to the grant of the later United States patent for the same invention. If the court below be right in this view of the law, it will follow from the decisions of this Court in the Bate and Pohl cases that the payment or non-payment of taxes upon foreign patents and the consequences thereof upon the foreign monopoly are not matters to be taken into consideration at all in ascertaining the term of the United States patent. All evidence upon that point would, in this view of the law, be immaterial and be dismissed from consideration; and the court would look only to "the remainder of the term for which the foreign patent was granted, without reference to incidents occurring after the grant of the foreign patent," as held in *Holmes* vs. *Burglar Alarm Co.*, 21 Fed. Rep., 468, quoted in *Bate* vs. *Hammond* (*supra*).

The present case is distinguished from that of *Pohl* vs. *Anchor Brewing Co.* solely by the fact that the forfeiture of the Peters and Donald patent by reason of non-payment of the tax occurred before the grant of the United States patent instead of subsequent thereto. It is to be supposed, therefore, that the appellee, unless it abandons altogether its contest against this patent, will endeavor to show that this difference is a vital one and ought to lead the court to a different conclusion from that reached in the *Pohl* case. It will be proper, therefore, to consider that particular phase of the question of limitation under section 4887, which is now presented for the first time to this Court.

We think that if the fact which distinguishes the present case from that of *Pohl* be such as to necessitate a different conclusion from that reached in said *Pohl* case, the difference will not be to the advantage of the appellee, but quite to the contrary.

The precise question now presented to the Court is this:

Had Peters and Donald the right under the laws of the United States to apply for and receive letters patent on the 29th day of November, 1881, for the invention described in their British patent, notwithstanding the fact that the tax due upon said British patent April 7, 1881, had not been paid?

Clearly the question of the *term* or *duration* of their United States patent is secondary. The primary and, possibly, the only question is, whether the patent could be granted at all; or, in other words, whether there existed at the time a statutory bar to the grant of the patent.

The pertinent facts are (1) the grant of the British patent,

and (2) the non-payment of the tax thereon. The law is found in section 4887, Revised Statutes, which is as follows:

> "No person shall be debarred from receiving a patent for his invention or discovery, nor shall any patent be declared invalid by reason of its having been first patented or caused to be patented in a foreign country, unless the same has been introduced into public use in the United States for more than two years prior to the application. But every patent granted for an invention which has been previously patented in a foreign country shall be so limited as to expire at the same time with the foreign patent, or, if there be more than one, at the same time with the one having the shortest term, and in no case shall it be in force more than seventeen years."

The first part of this section provides that—

> "No person shall be debarred from receiving a patent for his invention or discovery, nor shall any patent be declared invalid by reason of its having been first patented or caused to be patented in a foreign country, unless the same has been introduced into public use in the United States for more than two years prior to the application."

As to the meaning of this clause there has never been any uncertainty. Neither of the facts stated above constitutes a bar to the grant of a patent in this country. They have no effect whatever except that provided in the second clause of the section, which is as follows:

> "But every patent granted for an invention which has been previously patented in a foreign country shall be so limited as to expire at the same time with the foreign patent, or, if there be more than one, at the same time with the one having the shortest term, and in no case shall it be in force more than seventeen years."

Taking the section as a whole, we find it explicit to the point that the grant of a foreign patent shall not bar the grant of a United States patent for the same invention, unless the invention had been introduced into public use in the United States for more than two years prior to the application. There having been no public use whatever of the Peters and Donald invention prior to their application in this country, they were not debarred from receiving a patent by reason of their having caused the invention to be patented in a foreign country.

If the grant of the patent to Peters and Donald was not barred (as clearly it was not) by the operation of section 4887, for what term was it granted? This question is involved in the present case as one that must be determined before an accounting and final decree. It is, moreover, of great interest and importance to the public, and in all probability will never again come before this Court.

The decisions in the *Bate* and *Pohl* cases leave only two debatable questions, arising under this perplexing statute, still awaiting authoritative determination. One is, whether or not the statute affects a United States patent which was *applied for prior* to the grant of the foreign patent—a question raised, but not decided, in the *Bate* case. The other is the question now presented in this case, namely, what is the duration of the United States patent when a prior foreign patent granted for the same invention has, before the application for the United States patent, become forfeited by the operation of a condition subsequent according to the foreign statute.

In the light of the interpretation of section 4887 given by

this Court in *Pohl* vs. *Anchor Brewing Co.*, two possible views of this question may be taken :

(1.) There being no foreign patent "in force at the time of the issuing of the United States patent," and no public use in this country, the case does not fall within the operation of the statute, and there is nothing in its provisions to arrest the running of the term of the patent until the full period of seventeen years has elapsed.

(2.) The term of the United States patent will be for the remainder of the term for which the prior foreign patent was granted, and will expire with the "expiration by lapse of time" of the term of such foreign patent.

1.

At first glance, the second of these propositions appears to be the more consistent with the supposed purpose of the statute and with the decision of this Court in the *Pohl* case. There would seem to be incongruity in so construing the statute as that an inventor who has taken out a foreign patent can escape the provisions of the statute altogether by waiting until the foreign patent expires before securing a patent for the same invention in the United States. Could the intent of the statute be discerned beyond doubt, could any beneficial purpose be detected in it, then we should not ask or expect that by strict interpretation it be so construed as to defeat such intent and purpose ; but, as a matter of fact, its evasion could not be accomplished in the manner suggested, for that is guarded and the rights of the public protected by the provision incorporated in the section and found elsewhere in the statute (sections 4886 and 4920) making two years' public use in this country a bar to the grant.

Congress has power to enact a patent law such and only such as will "promote the progress of science and the useful arts." We have never yet heard the contention that this section 4887 tends in the slightest degree to the attainment of these ends. Its operation is only felt when it shortens the term of a patent granted for a useful invention that has helped to enrich the country and promote its industrial progress. Its effect is only and always destructive. Our law, in the liberal spirit in which it was conceived, says to citizen and foreigner alike, "Make your invention known to our Patent Office, and we give you a patent for seventeen years, which shall not be invalidated or even shortened because you have imparted knowledge of it to the public here or abroad, or published it here or abroad for any length of time, or used it abroad for any period or even in this country for any period less than two years." This section 4887 makes a distinction between a foreign patent and a foreign publication which, if made at all, ought to be against the publication instead of against the patent, since the patent creates a foreign monopoly, whereas the publication effectually prevents its existence.

The statute may be fitly described as one which makes an exception to the general law, and in so doing misses the very purpose for which the exception was presumably made. Were it not for section 4887 an invention *patented* abroad would stand on the same ground as one *published* abroad, and could be patented in this country for a term of seventeen years until cut off by public use or other legal bar. Since, therefore, as is on all hands agreed, the exception thus established is prejudicial rather than beneficial to the promotion of the useful arts and to the creation and devel-

opment of new industries in this country, there is every reason why the section should be strictly construed and its application limited to the smallest possible number of instances.

The facts of the present case illustrate in a very forcible manner the point that the visible results of this section are always prejudicial to those objects which the patent law is designed and framed to secure; but before showing this we will endeavor to ascertain what support is found, in the cases where this section has been examined, for the proposition that its provisions do not apply to a United States patent granted after a previously granted foreign patent had ceased to exist as a patent.

In the *Pohl* case this Court say that section 4887 requires that the United States patent be at its issue limited by the prior foreign patent—

> "Having *then* the shortest term to run."

And in the next sentence the Court say:

> "There is nothing in the statute which admits of the view that the duration of the United States patent is to be limited *by anything* but the duration of the legal term of the foreign patent *in force at the time of the issuing of the United States patent*, or that it is to be limited by *any* lapsing or forfeiture of any portion of the term of such foreign patent by means of the operation of a condition subsequent."

This paragraph announces two things: (*a*) That the term of the United States patent is in no case to be shorter by reason of *any* lapsing or forfeiture of any portion of the term of the foreign patent than it would have been had no such lapsing or forfeiture occurred. (*b*) That nothing in the

statute admits of the view that the United States patent will be limited by *anything* but the duration of the legal term of a foreign patent which is *in force* at the time of the issuing of the United States patent. If the second of these conclusions does not carry the same weight as the first, it is solely for the reason that the facts of that case did not call for a decision upon the question now presented in the case at bar.

In the next sentence, referring to the language of the last part of section 4887, the Court say: "This means the foreign patent which, *at the time the United States patent is granted*, has *then* the shortest term to run," etc. The Court thus appears to have emphasized the conclusion that the statute has no application in any case unless it appears that at the time of the issuance of the United States patent there was a foreign patent in force.

It is true that the court did not then have before it a case in which, before the grant of the United States patent, the prior foreign patent had (as alleged by the defendant's answer herein) "utterly ceased, determined, and become void"; but the court had read and in its opinion commented upon the decision of Judge Thayer in this case, and we deem it not unlikely that the court in examining the whole subject had reached the conclusion which its language implies, and which would unquestionably be in harmony with the constitutional basis of the patent law.

Furthermore, it appears from the statement of facts in the *Bate* case that the circuit court vacated the decree it had made in favor of the complainant upon proof that the original term of the Canadian patent had expired, and thereafter, upon proof that the superior court for Lower Canada

had adjudged the Canadian patent void *ab initio*, reëstablished the decree and injunction. Therefore it appeared to the circuit court that the term of the United States patent would not be limited because of the prior grant of a foreign patent which was void at the time of the issue of the United States patent. In fact, it is difficult to see how the court could hold otherwise in such a case. It is the *term* of the foreign patent *then in force* that fixes the duration of the United States patent *when granted.*

It was most emphatically declared by this Court in *Pohl* vs. *Anchor Brewing Co.* that the United States patent must be granted for a *fixed and definite term*, and when there is a foreign patent running at the time of the issue of the United States patent, the latter is by that fact so limited as to expire with the expiration " by lapse of time " of the term of such foreign patent, and that incidents which may occur subsequently to terminate the foreign patent otherwise than by lapse of time have no effect upon the duration of the United States patent. This appears to us to be quite in harmony with the view that when there is no foreign patent in force at the time of the issuing of the United States patent, and therefore no term running, the duration of the United States patent is not dependent upon that of the foreign grant at all, but is fixed and determined solely by the provisions of section 4884. The foreign patent has no longer the force of a patent, but has become simply a *published description* of the invention, which under our law is neither a bar to the grant of a patent nor a thing by which its normal term is affected.

The effect of the construction which this Court has put upon section 4887 in both *Bate* vs. *Hammond* and *Pohl* vs.

Anchor Brewing Co. has been to narrow and restrict its application, and we assume that the judgment of the Court has been in some measure influenced by the fact that the law is pernicious and mischievous in its operations. We believe, therefore, in all future cases the Court will be inclined to adopt any construction of the section which will save a meritorious patent from its destructive operations, and which at the same time is a construction consistent with the language of the statute and with the previous decisions of this Court.

In the present case it appears that the invention of Peters and Donald is one of great importance from a sanitary as well as from an industrial point of view.[9] But prior to the application for United States patent by Peters and Donald the invention had never been introduced into this country, nor brought to the notice of the American public, notwithstanding that the British patent describing it had been published and accessible for over seven years. The invention first had bodily existence in this country in 1881, when it was independently invented by Boyle (one of the complainants below), who applied for a patent only to be rejected on the prior British patent of Peters and Donald.

The situation was just that for which the patent laws were designed, and we can here trace their operation. The object to be attained was to bring this useful device to the service of the public, which could never be accomplished

NOTE 9.—The witnesses on both sides unite in praising the Peters and Donald invention. Peter White, a witness for defendant, says, referring to it, "It is the best pneumatic closet I have ever seen, covering all points which the latest improvements in water-closets claim to cover, especially preventing sewer gas [getting] into the room." *Record*, page 285, answer 20.

except by protecting the manufacturer for a limited term of years, thereby rendering it a proper business risk to invest his money in experimenting with the device, manufacturing it, and acquainting the public with its merits. The eventual commercial success of a new invention is in all cases highly problematical, and but few would risk their time, energies, and means in such a new undertaking if when they had, perhaps at great cost, demonstrated its success, others could freely step in and share the profits to which the pioneers were fairly entitled. It is the intent of the whole statute, and presumably of section 4887 in particular, to urge those who have made useful inventions to make their value known by actually introducing them into use in this country, and section 4887 serves this purpose only so far as it says to persons who have patented their inventions abroad that delay will be at the expense of the duration of the United States patent, and, if protracted until others have used the invention for two years, will bar its grant altogether.

In all this the patent laws fully accomplished, in the present case, the purpose for which they were framed. The appellants first purchased the inchoate rights of Peters and Donald, applied for a United States patent, and, relying upon the grant to them by the Government of the United States, embarked largely upon the manufacture of these devices, which, though absolutely unknown in this country when the Peters and Donald patent issued, are now extensively used all over the land.[10] Thus the pneumatic closet,

NOTE 10.—The evidence shows that Henry Huber and Co. made in the five years and nine months after commencing to manufacture 8,874 pneumatic closets. *Record*, page 137.

now seen everywhere in use in many different forms, came into the possession of the people of the United States. For the purposes which the Constitution contemplated, the invention of Peters and Donald was in 1881 absolutely new. The grant of the British patent had not exerted the slightest influence upon the useful arts in this country, or in the slightest degree affected the interests or added to the information of the American public. Not one step had been made, or was likely to be made, in the direction of that result which is the fundamental purpose of the patent law. It will be impossible, absolutely impossible, to point out a single reason why, in consideration of what the patentees have now done for the public, they should not in justice have the full measure of protection which the law provides. If upon broad grounds of public policy it is ever expedient to issue letters patent for seventeen years, it is expedient so to do in this case, and in justification and support of this patent can be urged every reason which justifies and supports the existence of a patent law.

If, then, it so be that section 4887 operates to cut off more than half the term of this patent, it operates arbitrarily and unjustly. If, however, it can, without doing violence to its language, be so construed that it will not apply to this patent, then we think this is eminently a case for judicial anxiety to adopt such construction. Now, not only is the statute open to such construction, but in fact to reach it the Court have only to repeat the exact language of their last decision and to say again: "*There is nothing in the statute which admits of the view that the duration of the United States patent is to be limited by* ANYTHING *but the duration of the legal*

term of the foreign patent IN FORCE *at the time of the issuing of the United States patent.*"

Considering solely the rights and interests of the public, it clearly is of no consequence whether the patented invention be public property abroad by reason of its never having been patented abroad, or by reason of the foreign patent having lapsed. From the standpoint of the American public, the two cases are exactly the same. No reason exists, therefore, why the term of the American patent should in the one case be seventeen years and in the other case seven. Of course the Court will not and cannot set aside a law because it appears to be based upon unsound and vicious reasoning, or because its operations are attended by hardships in many instances and by beneficial results in none. But when in addition to this it also appears that the law in question is reasonably open to an interpretation which will avoid illogical and harsh results, we submit that such construction will both commend itself to the Court and satisfy the public.

Our proposition that the Peters and Donald United States patent can consistently with the language of the statute and the prior decisions of the Court be upheld for the full term of seventeen years from June 27, 1882, is thus seen to be based upon the statement of this Court in the *Pohl* case that "there is nothing in the statute which admits of the view that the duration of the United States patent is to be limited by anything but the duration of the legal term of the foreign patent *in force* at the time of the issuing of the United States patent," and upon our understanding that this Court meant by this language that the foreign patent to be *in force* must be operative in the foreign country as a patent. And

we urge this proposition to the attention of the Court, because counsel for the defendant strenuously contended at the hearing below (and hence will presumably so contend here) that if the prior foreign patent had for any reason ceased to have operative force as a patent in the country in which it was granted, then in such case no authority in law exists for the grant of a patent on the same invention in the United States. But our discussion shows that if counsel for the appellee are correct in this interpretation of the statute, the necessary result of such interpretation is not to bar the grant of a patent in the United States, but to grant the patent for the full term of seventeen years.

2.

In studying the decisions of this Court in *Bate* vs. *Hammond* and *Pohl* vs. *Anchor Brewing Co.* with a view to determining the effect of this Court's interpretation of section 4887 upon the present case, we have, as stated above, found two possible constructions of the statute, either of which would be consistent with the opinions of the Court in the above cases; and inasmuch as the final determination of the meaning of this section is awaited with great interest, we deem it not improper to set forth the considerations which appear to support that view of the statute which is the less favorable to the appellants herein.

It was held by the court below to be immaterial in determining the effect of a forfeiture of the foreign patent by nonpayment of a tax, whether such forfeiture occurred before or after the grant of the United States patent. From this view this Court did not dissent in the *Pohl* case, but held that a lapse occurring because of a condition subsequent according to

the foreign statute did not affect the term of the United States patent fixed at its grant by the term of the foreign patent. If this be taken to mean that our statute takes no note under any circumstances of incidents that may affect the duration of the foreign patent and cause its premature termination, it would follow that evidence of such incidents to the foreign patent would be inadmissible for any purpose, and that in applying the statute the Court will look only to the term expressed in the grant of the foreign patent or provided by the law under which it was granted.

This Court further held that section 4887 assumes the foreign patent to be "one granted for a fixed and definite term," and the United States patent "shall be so limited as to expire with such term of the foreign patent." It would be quite consistent with this to hold that the fixed and definite term (for which the prior foreign patent is by section 4887 assumed to be granted) is that which alone controls the term of the subsequent United States patent, notwithstanding that the foreign patent had actually ceased to be operative as a patent in the foreign country at the time of the grant of the United States patent. In thus construing section 4887 as if it contained the words "expiration by lapse of time" of the foreign patent, it would seem to be implied that expiration by forfeiture, which cannot have the effect of curtailing the duration of the United States patent, could not through occurring previously to the grant of the United States patent have the effect of extending the duration of the latter.

This view of section 4887 considers only the term for which the foreign patent was actually or potentially granted, and considers that when this Court in the *Pohl* case held

that the duration of the United States patent is to be limited only by "the duration of the legal term of the foreign patent in force at the time of the issuing of the United States patent," this Court referred only to the *term* being "in force" (*i. e.*, having still an unexpired period to run), and not to the foreign patent being in force as an operative patent in the foreign country. This view, that the thing in force to be considered is the term and not the patent protection, is in full harmony with the conclusion also reached by this Court in the *Pohl* case, that "the words *expiration of term* do not mean expiration of term through a forfeiture by breach of a condition, but mean expiration by lapse of time." Under this view of the meaning of the statute, it hence follows that in considering the effect of a prior foreign patent upon a later United States patent for the same invention it is only necessary to take into consideration the term actual or potential for which the prior foreign patent was granted and to assign to the United States patent a term which shall expire with the expiration by lapse of time of the term of such prior foreign patent.[11] Thus construed, section 4887

NOTE 11.—This interpretation of section 4887 has the advantage of giving effect to the presumable intent of Congress in inserting it in the statute. Many diverse and irreconcilable views have been expressed concerning the supposed intent of Congress in inserting this section. Counsel for the defendant in the present case urged at the hearing below that Congress intended to discriminate against foreign inventors and not to place them on the same footing with citizens; that Congress intended to protect a foreign inventor in this country so far as and no farther than he was protected by his patent in his own country; that Congress intended that no invention which was public property in a foreign country should be monopolized by a patent at home, which would place our domestic manufacturers and trades at a disadvantage, and that hence it was the intention of Congress to provide that whenever the invention became public property abroad it should simultaneously become public property in the United States. These arguments as to the intent of Congress and supposed considerations of public policy

simply says that the term of the later United States patent shall expire when the term of the prior foreign patent expires by lapse of time. This is irrespective of whether the foreign patent has protective force in the country in which it was granted or not; so that if the entire term of the foreign patent had expired by lapse of time before the United States patent issued, nevertheless the foreign patent would have exactly the same limiting effect. Under this interpretation of the statute the Peters and Donald United States patent was granted June 27, 1882, for a term which expired April 7, 1888, on which date the term of fourteen years for which the prior British patent was granted expired by lapse of time.

---

find, we believe, little support in the section of the statute under consideration, and are negatived by the other sections of the patent act and the entire spirit of the same and of the constitutional provision on which it is based.

The Supreme Court has decided, in *Bate Refrigerator Company* vs. *Hammond*, that the section, 4887, under consideration applies (as is evident from its face) to citizens and foreigners alike, so that it could not be intended as a discriminating provision against foreigners. With the single exception of the provision of the statute (section 4902) relating to caveats, there is absolutely no distinction made between citizens and foreigners.

Nor could it have been the intention of Congress to provide that whenever an inventor, by his own act or otherwise, permitted his invention to become public property abroad it should thereupon become public property here. It is notorious that in nearly every country in the world protecting inventions by law the right to obtain a patent is lost upon any publication of the invention in that country. This is particularly the case in the European countries. So that by the mere fact of publishing the patents granted here and transmitting them abroad the Government of the United States, while establishing a monopoly within its own boundaries, absolutely prevents the establishment of a similar monopoly abroad, and thus gives the free use of an invention to citizens of foreign countries while prohibiting its use by its own citizens; and in the case of the Peters and Donald invention it has, since its first publication, been public property *everywhere* except in Great Britain and the United States.

The more probable view of the possible intent of Congress in inserting section 4887 in the patent statute is that Congress thereby intended to urge

If this view is the correct one, the following proposition would be established :

The term or duration of the United States patent is governed, controlled, and limited by the expiration by lapse of time of the term of the prior foreign patent having the shortest term, and the term of the United States patent ceases with the expiration by lapse of time of the term of such prior foreign patent; and the life or duration of the United States patent is not affected or controlled by any breaches occurring subsequent to the grant of the foreign patent of conditions annexed thereto, nor is the validity of the United States patent affected by circumstances which invalidate the prior foreign patent by reason of peculiarities in the foreign statute.

---

those who had previously patented their inventions to be prompt in patenting the same in the United States, having due regard to the fact that knowledge of the invention may be brought to the United States by the publication here of their foreign patents, and that thereby the inventions may possibly come into use here without patent protection. The statute hence says to him who has secured a foreign patent, "You are invited to patent your invention in the United States, and notice is hereby given to all in the United States that your rights to a patent are hereby protected; but if you delay in securing your patent here, it is at your own risk. If the invention goes into public use here for two years before you apply for your patent, your right will be gone, and in any case every day that you delay is one day taken from the duration of the patent you are at liberty to secure, since whenever your patent is granted its term will expire with the expiration by lapse of time of the term of the foreign patent you have already secured." This view of the intent of Congress is in accord with the whole spirit of the statute, with the language of the section under discussion, with all due regard to the rights of the inventor and of the public, and with the decisions of this Court in the *Bate* and *Pohl* cases. The right to a patent guaranteed by the Constitution is preserved, delay is discouraged by making the penalty for delay exactly commensurate with the extent of the delay, and any rights of the public becoming vested in it during the period of delay are protected in the same manner and to the same extent as they are in reference to other unpatented inventions, and with an added safeguard due to the fact that the statute is notice to the public that the right to apply for and obtain a patent remains with the grantee of the foreign patent.

Under this proposition the Peters and Donald patent in suit was legally granted and continued in force until April 7, 1888.

We submit, therefore, that either of the two propositions introduced by us in reference to the construction of section 4887 is in strict harmony with the decisions of this Court and with the language of said section; either secures a definite, certain, and easily ascertainable duration of the United States patent, and either obviates the necessity (which would otherwise exist) of our courts examining, construing, and determining the legal significance of the oftentimes obscure and intricate provisions of foreign laws which govern the forfeiture and invalidation of foreign patents.[12]

NOTE 12.—The inconveniences and burdens which would be thrown upon our courts by such a construction of section 4887 as would necessitate the examination and determination of foreign laws providing for the forfeiture or invalidation of patents are well illustrated by the recent case of *Edison Electric Light Co.* vs. *United States Electric Lighting Co.*, 61 O. G., 564, decided by the circuit court of appeals for the second circuit October 4, 1892. In their decision the circuit court of appeals say:

> "The patent in suit was issued January 27, 1880. A patent for the same invention was issued in Canada November 17, 1879, No. 10654, the term of which, expressed on its face, was five years; but the Canadian statute gave to the owner of the patent the right to an extension, at his option, on the payment of a required fee, for the further period of ten years. On May 4, 1883, the owner paid the fee required, and on October 30, 1883, obtained a certificate of extension.
>
> "In *Bate Refrigerating Co.* vs. *Hammond* (46 O. G., 689; 129 U. S., 164) it was held that, so far as the term of a Canadian patent thus extended under the Canadian statute operated to curtail the term of a United States patent under section 4887, United States Revised Statutes, it should be regarded as a continuous term for the entire period. It appears, however, that on March 5, 1880, a patent for the same invention was granted in Sweden, the grantee of which subsequently failed to prove, as required by the law of that country, that the invention was "being constantly practiced within the kingdom." Thereupon, on March 5, 1883, the Swedish patent right was lost and forfeited. Defendant contends that in consequence the Canadian patent expired on the same day, March 5, 1883, or, if it continued till the expiration of the first five years expressed on its face, viz., November 17, 1884, it could not by the payment of fees or the certificate of the Canadian commissioner of patents be extended for the additional ten years. For that reason defendant contends that the

(*b.*)—ALLEGED ABANDONMENT BY PETERS AND DONALD.

It was contended on behalf of the defendant at the hearing below that (even if it should be adjudged that there was no bar under section 4887 to the grant of a patent in the United States) Peters and Donald had as a matter of fact abandoned their invention in the United States, and hence could not secure a valid patent (section 4886 R. S.). This contention was not alluded to by Judge Thayer in his opinion, and we apprehend that if considered by this Court at all it will present little ground for argument. There is no evidence tending to show abandonment, and the contention of abandonment is based solely upon these circumstances:

---

case at bar is distinguishable from *Bate Refrigerating Co.* vs. *Hammond*, and that the patent in suit expired with the Canadian patent, either on March 5, 1883, or on November 17, 1884, prior to the beginning of this action.

"The Canadian statute provides as follows:

"'*An inventor shall not be entitled to a patent for his invention if a patent therefor in any other country shall have been in existence in such country more than twelve months prior to the application for such patent in Canada, and if during such twelve months any person shall have commenced to manufacture in Canada the article for which such patent is afterwards obtained such person shall continue to have the right to manufacture and sell such article notwithstanding such patent; and under any circumstances when a foreign patent exists the Canadian patent shall expire at the earliest date at which any foreign patent for the same invention expires.*'

"The soundness of the defendant's contention depends on the meaning, under Canadian law, of the phrase 'when a foreign patent exists' as used in this statute. If that phrase is confined to foreign patents which exist before the relevant Canadian patent is issued, the loss and forfeiture of the Swedish patent right in no way affected the Canadian patent to Edison. The meaning of this phrase has not been declared by the Canadian courts, but a careful examination of the evidence given by the Canadian lawyers who have testified as to its practical construction by the Canadian Government and have given their professional opinions as to its meaning in Canadian law satisfies us that it is there used as covering only foreign patents which exist before the issue of the relevant Canadian patent. We are of opinion, therefore, that neither directly (*Pohl* vs. *Anchor Co.*, 49 O. G., 1695; 134 U. S., 381) nor indirectly, through the Canadian patent, is the patent in suit affected by what happened to the Swedish patent."

(1) That Peters and Donald delayed seven years and seven months after the date of their British patent before applying for a United States patent; (2) that somebody (who it was there is no evidence tending to show) failed to pay the onerous tax of nearly five hundred dollars on the British patent; and (3) that a nominal consideration (ten pounds) is named in the assignment from Peters and Donald to Boyle, there being no evidence as to the actual consideration.

There is no evidence to show that the non-payment of the seven-year tax upon the British patent resulted from the negligence of Peters and Donald. There is no evidence to show that Peters and Donald had any control over their British patent in 1881 when the tax was due. For all that appears to the contrary, Peters and Donald may have sold their British patent prior to 1881, and the default may have been that of their assignee, over whom they had no control. The possession of the British patent by Peters and Donald at the time of its forfeiture is an essential link in any chain to establish any abandonment by them. The burden of proof is on the defendant to show this, and it has not been done.

Abandonment is a plea not favored by the law, and requires strict proof to establish it.

> "It is proper for me to say, also, that those who rely upon the ground that a party has forfeited a legal right secured to him in due form of law, for the purpose of defeating his enjoyment of that right, must make out the point clearly and satisfactorily, beyond any reasonable doubt or hesitation, because the law does not favor an abandonment and throws upon the party who seeks to obtain the benefit of a forfeiture the burden of proving it beyond all reasonable question." (*McCormick* vs. *Seymour*, 2 Blatchford, 256.)

See also *Singer* vs. *Braunsdorf*, 7 Blatchford, 521, &c.

But in any case no abandonment is material which does not amount to a complete and irrevocable surrender of all rights to the public of the United States. An abandonment of the Peters and Donald invention to be material must have been to the people of the United States prior to the filing of the application here in November, 1881; but the fact is that Peters and Donald assumed to sell the right for the United States and applied for a patent here conformably to every statutory requirement, and obtained one, and their assignees have enjoyed its use and exclusive possession for upwards of five years, and the public have acquiesced in its validity and have respected it for five years.

Abandonment is a question of fact. It begins with the intention and purpose to abandon on the part of the inventor; it is accomplished by some express words or acts of abandonment on his part divesting him of the exclusive right to his own invention and investing the people of the United States with the full right to use it, or by such a long series of acts as clearly manifest the intention to abandon. It is made irrevocable by acceptance and actual possession by the public of the abandoned rights to such an extent and under such circumstances that it would be unjust to permit the inventor to recall and assert his rights.[13]

NOTE 13.—The question of abandonment has been raised in an exceedingly large number of cases before this court, and numerous phases of the question have been adjudicated. Among the different phases of this question which have appeared before this court are (1) abandoned experiments due to the discarding of an incomplete invention; (2) abandonment by long delay after completion of the invention without disclosing, publishing, or patenting the invention, so that the invention has become a lost art; (3) abandonment by long acquiescence in the rejection of an application for patent; (4) abandonment by disclosing a patentable invention and intentionally failing to claim it in a patent; (5) abandonment by inadvertently failing to claim a patentable invention in a patent and by unreasonably de-

Did Peters and Donald abandon their invention to the public of this country prior to the fall of 1881? There is

laying in correcting the inadvertence by reissue; (6) abandonment by express dedication to the public; (7) abandonment after completion of the invention, disclosing the same to the public, and unreasonably delaying to apply for a patent. Manifestly the first six of these phases of abandonment have no pertinence in the case at bar, and only the seventh need be considered. A review of all the decisions of the court in which this seventh phase of abandonment has been discussed will show that in every instance where abandonment has been held numerous facts and circumstances creating estoppels, raising equities, disclosing hardships and injustice, have always conspired to support the charge. The following is a brief résumé of all the decisions of this court which we can find bearing upon this phase of abandonment:

Pennock vs. *Dialogue*, 2 Peters, 1. This case arose under the act of 1793, under which any public use or sale with the knowledge and consent of the inventor constituted a statutory bar to the grant of a patent. The facts before the court were that the invention, for improvements in fire hose, had been completed seven years before the application for patent was made, and during this interval some 13,000 feet of the hose had been made and sold with the full knowledge and acquiescence of the inventor. In deciding the case the court said:

> "It is admitted that the subject is not wholly free from difficulties, but upon most deliberate consideration we are all of opinion that the true construction of the act is that the first inventor cannot acquire a good title to a patent if he suffers the thing invented to go into public use or to be publicly sold for use before he makes application for a patent. His voluntary act or acquiescence in the public sale and use is an abandonment of his right, or rather creates a disability to comply with the terms and conditions on which alone the Secretary of State is authorized to grant him a patent."

Shaw vs. *Cooper*, 7 Peters, 286. This was a case arising under the alien act of 1800 and the general act of 1793, under which public use abroad had the same force and effect as public use in the United States. The evidence showed that the inventor, an Englishman, completed the invention in England eight years before his United States patent was applied for, and that for five years before the application the invention was extensively used and sold in England and France. In deciding the case this Court said:

> "Whatever may be the intention of the inventor, if he suffers his invention to go into public use, through any means whatsoever, without an immediate assertion of his right, he is not entitled to a patent; nor will a patent obtained under such circumstances protect his right."

McClurg vs. *Kingsland*, 1 Howard, 202. This case also arose under the acts of 1793 and 1800, and it was suggested that even four months' public

absolutely no evidence of their *intention* to do so. Mere delay in applying for their patent in this country from April,

use by others prior to the inventor's application, with his knowledge and acquiescence, might be sufficient to sustain the charge of abandonment. The case turned, however, on the question of implied license.

Kendall vs. *Winsor*, 21 Howard, 322. This case arose under section 7, act of 1839 (substantially identical with section 4899, R. S.), under which the defendant claimed the right to continue the use of a machine constructed and used before the inventor's application for patent, on the ground that it had been so constructed and used with the inventor's knowledge and consent, and, further, on the ground that the invention had been abandoned. The evidence tended to show that the invention was made eight years before the application was filed; that the inventor's delay was largely due to the fact that he was endeavoring to perfect the invention; that the inventor had used his machines in his own business for five years before application, but behind closed doors and with his employés pledged to secrecy, and that one of his employés, in violation of his pledge of secrecy, entered the employ of the defendant and erected one or more of the machines, which were used more than a year before the application was filed. The patent was upheld, and the defendant was held as an infringer. This Court said:

> "It is the unquestionable right of every inventor to confer gratuitously the benefits of his ingenuity upon the public, and this he may do either by express declaration or by conduct equally significant with language, such, for instance, as an acquiescence with full knowledge in the use of his invention by others, or he may forfeit his rights as an inventor by a willful or negligent postponement of his claims or by an attempt to withhold the benefit of his improvement from the public until a similar or the same improvement should have been made and introduced by others. Whilst the remuneration of genius and useful ingenuity is a duty incumbent upon the public, the rights and welfare of the community must be fairly dealt with and effectually guarded. Considerations of individual emolument can never be permitted to operate to the injury of these; but whilst inventors are bound to diligence and fairness in their dealings with the public with reference to their discoveries, on the other hand they are, by obligations equally strong, entitled to protection against frauds or wrongs practiced to pirate from them the results of thought and labor in which nearly a lifetime may have been exhausted—the fruits of more than the *viginti annorum lucubrationes*, which fruits the public are ultimately to gather."

Agawam vs. *Jordan*, 7 Wallace, 583. In this case the invention was used for seven years before application was made, but the use was held to be experimental only and the patent was upheld. This Court said:

> "Undoubtedly an inventor may abandon his invention and surrender or dedicate it to the public, but mere forbearance to apply for a patent during the progress of experiments and until the party has

1874 (the date of their English patent), to November, 1881, is not evidence of such intention and certainly is not conclusive proof of such intention. The books are full of cases

---

perfected his invention and tested its value by actual practice affords no just grounds for any such presumption."

Consolidated Fruit Jar Co. vs. *Wright*, 94 U. S., 92. In this case the patentee had publicly used and sold his invention eight years before he applied for his patent, and in the interim the invention was largely sold on the market by others who were ignorant of his claims. Abandonment held.

Planing Co. vs. *Keith*, 101 U. S., 479. In this case the plaintiff's assignor (Woodbury) had filed an application in 1848 which was rejected in 1849, fee and application withdrawn in 1852, and Woodbury had knowledge of and acquiesced in the withdrawal in 1854. In 1870 application was renewed, and patent was granted in 1873. This Court said:

> "The defendant's answer asserts that before December 5, 1870, and since the withdrawal of Woodbury's rejected application, many thousand planing machines containing his invention had been constructed, sold, and used in the United States, and this assertion is accepted in the appellant's brief. This fact must have been known to him. Upon this subject the evidence is very full.
>
> "There is ample evidence also that hundreds of other machines containing the same device were manufactured and sold in Boston between the years 1854 and 1870, and were frequently seen by Mr. Woodbury, calling forth no remark from him indicating that they were invasions of his rights. In view of all this it is of little importance that from time to time he expressed a hope to his brother, and perhaps occasionally to some others, that he should some time and in some way obtain a patent. Such was not his language to the public. His inaction, his delay, his silence under the circumstances were most significant. Though not express avowals of abandonment, 'to reason's ear they had a voice' not to be misunderstood. They spoke plainly of acquiescence in the rejection of his application for a patent. They encouraged the manufacture and sale of his invention, and there is no sufficient explanation of Mr. Woodbury's conduct—nothing which can be regarded as an adequate excuse for it.
>
> "We are constrained, therefore, to hold that Woodbury's invention was abandoned by him before he obtained his patent."

Worley vs. *Tobacco Co.*, 104 U. S., 340. In this case abandonment was predicated upon six years' public use before application.

Rifle Co. vs. *Whitney Co.*, 118 U. S., 22. In this case this Court said:

> "On January 10, 1859, Cochran (the plaintiff's assignor) filed an application for a patent for this invention, which, on February 8, 1859, was rejected by the Commissioner of Patents for want of novelty, and on February 20, 1860, was withdrawn by Cochran and $20 refunded to him at his request, agreeably to the act of July 4, 1836, ch. 357, § 7, 5 Stat., 120.
>
> "At various dates from November 19, 1861, to February 11, 1868,

where patents have been sustained under circumstances of much greater delay. *Henry* vs. *Tool Co.* (14 Official Gazette, 855; 3 Banning & Arden, 501) is in point.[14] Nor is the failure to pay the heavy seventh-year tax on the British patent, even if that act was the act of Peters and Donald themselves, evidence of an intention to abandon the invention in the *United States*, and certainly it is not conclusive proof of such intention. Any inference of such intention that might be drawn from these two facts is absolutely refuted and set at rest forever by the fact that they sold their rights for the United States that very year and made due application for a patent, thus evidencing in the strongest possible way not only that they did not intend, but also that they had not intended to abandon their right to a patent in the United States.

There is no *act* of abandonment proved. Mere delay in applying for a patent has time and again been held to be

---

eighteen patents were granted to other persons for the same devices or their equivalents, and the defendants bought some of those patents and afterwards manufactured fire-arms under them.

"On May 6, 1868, Cochran filed a new application, which was rejected by the examiners on the ground of abandonment.

"During the time between the applications of 1859 and of 1868 Cochran applied for and obtained twenty-two other patents, nine of them for improvements in breech-loading firearms, some of which he sold for considerable sums. He was poor and in debt, but upon the whole evidence it is quite clear that his delay in renewing the application of 1859 was not owing to want of means, but to his regarding this patent as of less value than the others."

Andrews vs. *Hovey*, 123 U. S., 267; reheard, 124 U. S., 694. The latter volume contains an elaborate discussion of the authorities on abandonment. This case decided that public use for more than two years to be a bar need not be with the knowledge and consent of the inventor.

NOTE 14.—In this case Henry obtained a British patent dated November 15, 1860. Nearly *eleven* years after, on September 9, 1871, he applied for a United States patent, which was granted October 10, 1871, No. 119,846.

insufficient proof of abandonment of invention. Said Judge Woodruff in *Russell Erwin Co.* vs. *Mallory*, 5 Fisher, 541:

> "Lapse of time does not *per se* constitute abandonment. It may be a circumstance to be considered. The circumstances of the case other than mere lapse of time almost always give complexion to delay, and either excuse it or give it conclusive effect. The statute has made contemporaneous public use with the consent and allowance of the inventor a bar when it exceeds two years, but in absence of that and of any other colorable circumstance, we know of no mere period of delay which ought *per se* to deprive an inventor of his patent."

So *In re Golding*, 8 Official Gazette, 141:

> "The courts, although regarding a long neglect to file an *application* or to complete or renew one already filed *a link* in the chain of evidence going to prove *abandonment of an invention*, yet do not hold the evidence complete unless such neglect is accompanied by actual proof of express acts of dedication, or by a clear *acquiescence in the acts of others*, amounting to the same thing. Abandonment, being regarded as in the nature of a forfeiture of a right, is not favored by law. *James* vs. *Sewall*, 6 Fish., 343."

Nor was the failure to pay the onerous one-hundred-pound tax on the British patent in April, 1881, an act of dedication of the invention to the *American* public. The lapse of that patent made the use of the invention free in Great Britain to the British public, unless the patent should be revived by process of law, or grant of the Crown, or act of Parliament; but it did not affect the relations of the *American public* to the invention, one way or the other. The knowledge in this country of the fact of lapse of the British patent is wholly immaterial. It added nothing to the knowledge of the invention here, or to the rights of the

public at large in this country. The British patent had kept nothing from them. Its lapse gave nothing to them.

Nor was there any such actual possession and use of the invention by the American public, prior to the fall of 1881, as a consequence of Peters and Donald's delay in applying for a patent here, or as a consequence of the knowledge of the lapse of the British patent, that it was unjust or unreasonable for Peters and Donald to say, in the fall of 1881, that they still owned the right to take out an American patent, or that would estop them from perfecting that right.

There was no public use at all of the invention in the United States prior to the fall of 1881, and the public had acquired no vested rights, and had not gone into possession at all when Peters and Donald sold in the fall of 1881; so that no equities in favor of the public arise; and certainly none arise in favor of this defendant, which did not appropriate to itself this invention until several years after the patent was issued and had been enjoyed in undisturbed possession by complainants, who, on the strength of such possession, have invested large sums in the invention. The equities are all against the defendant. The only possible person who could in 1881 have complained against a patent being granted here to Peters and Donald was Boyle, who had independently made the same invention; but he waived any adverse claim of his own, and acquiesced in the prior right of Peters and Donald.

We submit that the contention of the defendant, that in 1881, long before the defendant knew anything about the invention, it was dedicated to the American public at large, and to this defendant in particular, and dedicated and abandoned irrevocably and for all time, so that Peters and

Donald in selling it were committing a fraud, and complainants in taking a patent for it were misleading the Patent Office and defrauding the public, is unsupported by the evidence. Abandonment has not been proved within the meaning of United States Revised Statutes, 4886, nor is the proof sufficient to raise even a doubt on that question.

And if this Court adopt the view that the expiration by lapse of time of the term of the British patent is alone to be considered, then the contention of abandonment is easily disposed of, since in such case the statute has already provided a definite penalty for delay, which consists in foreshortening the duration of the United States patent in exact proportion to the delay; and where the statute has fixed a specific penalty for delay no other or greater penalty can be devised and applied by the courts.[15]

NOTE 15.—The court below, in its decision in the present case, referred to the decision of the Commissioner of Patents in the *case of Mushet*, 2 Com. Dec., 106, as showing the construction placed by the Patent Office upon section 4887 in the administration of the patent law, and counsel for the defendant, in their brief, at the hearing below, referred to the cases of *Ward*, 2 Com. Dec., 126; *Boyer*, *id.*, 130; *Smith*, *id.*, 131; *Singer*, *id.*, 146, for the same purpose. Each of these five cases was an application for the extension of a United States patent for an invention previously patented abroad, and all arose shortly after the passage of the act of July 8, 1870, containing the provision which was subsequently substantially re-enacted as section 4887, Rev. Stats. These cases of extension, it is submitted, are not pertinent because in an application for an extension the question is, Did the patentee, who had already enjoyed a monopoly for a full term of fourteen years, *deserve* an extension with due regard to the public interest? The extension of a patent was wholly within the discretion of the Commissioner, no review of his decision having ever been allowed, either by appeal or by a bill in equity. Commissioner Fisher, in deciding the Boyer case, said:

> "Whether the section in question does or does not actually forbid the extension, it so clearly declares that the American patent shall not survive the death of the prior foreign patent that a decent respect for the declared policy of the legislature would determine an officer, while exercising his discretion, to exercise it in accordance with that policy and not in opposition to it."

In conclusion we submit:

1. That Peters and Donald never abandoned their invention in the United States.

Manifestly these extension cases are no criteria for determining the practice of the Patent Office ralating to original applications filed under circumstances akin to those involved in the Peters and Donald patent here in suit. As far back as 1869 substantially the same question as that here involved arose in the Patent Office. In the contested case of *Eades* vs. *Jewsbury*, Decisions of the Commissioner of Patents, 1869, page 90, opinion by Commissioner Fisher, the following were the facts:

Joseph Jewsbury obtained a British patent No. 3115, for a term of fourteen years from November 20, 1862, the patent being enrolled May 11, 1863. November 20, 1865, the fifty-pound tax became due upon the British patent and was not paid; so that then and there the British patent became void and all rights thereunder ceased and determined. Nearly three years after this Jewsbury, on October 10, 1868, filed an application for a United States patent, which while pending was involved in an interference with the United States patent of one Eades. It was contended on behalf of Eades that in view of the state of facts Jewsbury had abandoned his invention and hence could not secure a valid patent—precisely the present contention. The honorable board of examiners-in-chief in sustaining Jewsbury's right to a patent and in setting aside this contention said:

"*What may be regarded as a forfeiture or abandonment of an invention in England is not consequently a forfeiture or abandonment as far as relates to the United States.*"

Vol 8, Decisions of the Board of Examiners-in-Chief, page 32.

Commissioner Fisher said, in deciding the case:

> "It is, however, insisted by the counsel for Eades that Jewsbury allowed his English patent to expire at the end of three years by the non-payment of the necessary fee, and that the forfeiture of the patent worked an abandonment of the invention; also that by the act of 1839, section 6, the American patent must be limited to the life of the foreign patent, and that, the latter having expired by forfeiture, no American patent can now be issued.
>
> "The statute does not provide that the foreign patent shall be pending at the time of the issue of the American patent. It declares 'that no person shall be debarred from receiving a patent by reason of the invention having been patented in a foreign country more than six months prior to his application.' The effect of this is that no matter how long before the application here the foreign patent may have been granted, it shall not stand in the way of a patent in this country if the term be limited to seventeen years from the enrollment of the complete specification (in Great Britain) and the invention has not gone into public and common use.
>
> "It follows that a patent must issue to Jewsbury for seventeen years from May 11, 1863."

2. That on November 29, 1881, when Peters and Donald applied for letters patent of the United States, they had a legal right to apply for and obtain such patent.

And in pursuance of this decision the patent issued to Jewsbury March 15, 1870, No. 100,769.

This case is different from the present case in that the Jewsbury patent was granted under the laws of 1839 and 1861, so that his patent was issued for seventeen years from the grant of the foreign patent (*i. e., enrollment* in the case of a British patent), while the Peters and Donald patent was issued under the act of 1870 (re-enacted in the Revised Statutes), so that its term is controlled by the term of the foreign patent; but, so far as abandonment is concerned, the Jewsbury case is identical with the case at bar, and it is clear from the decisions of this Court referred to in this brief that the Patent Office was correct in deciding that the forfeiture or abandonment of an ivention or patent in Great Britain is not tantamount to an abandonment in the United States.

And recently, since the decision of this Court in *Pohl* vs. *Anchor Brewing Company*, the same state of facts has again been adjudicated in the Patent Office in the *case of De Meritens,* vol. 40, Decisions of the Examiners-in-Chief, page 191, decided January 10, 1891. In that case the circumstances were as follows:

De Meritens was a Frenchman and obtained a French patent, No. 146,010, dated November 24, 1881, for fifteen years, subject to the payment of annuities. The annuities were paid for three years only, so that the patent was forfeited November 24, 1884. Application for patent in the United States was made three years later, on November 8, 1887. The facts in reference to the French patent were disclosed in an interference with an American patentee. The application was rejected by the examiner, in view of the lapse of the French patent, on the authority of the decision of Judge Thayer in *Huber* vs. *Nelson* (the case at bar). On appeal the examiners-in-chief considered the question fully in the light of the decision of the Supreme Court in *Pohl* vs. *Anchor Brewing Co.*, and decided that De Meritens was entitled to a patent.

Thus, after a lapse of twenty-two years, during which period the section of the statute under discussion has been construed a half dozen different ways in the circuit courts, the Patent Office resumes the practice which it originally inaugurated.

In each of the cases of Jewsbury and De Meritens the United States application was not filed until three years after the lapse of the foreign patent, and an adverse claimant had attempted in the interim to secure the invention. The case of Peters and Donald is much stronger from an equitable point of view, since their application was filed within eight months of the lapse of the foreign patent, and no one presented an adverse claim.

3. That the Peters and Donald patent was lawfully granted, and was a good and valid patent on the date, October 3, 1887, when this suit was brought.

4. And, if it is material to determine the duration of the term for which the Peters and Donald patent was granted, then we submit that nothing in the former decisions of this Court is inconsistent with the view that the subsequent United States patent is limited solely by the term for which the prior foreign patent was actually or potentially granted, under which view the Peters and Donald United States patent would have expired April 7, 1888; but that sound reason and logic support the interpretation of the statute as meaning that the duration of the United States patent is not limited except by the legal term of a patent in force and operative to give patent protection in the country in which it was granted at the time of the issuing of the United States patent, in which case the Peters and Donald United States patent is valid for a full term of seventeen years from June 27, 1882.

THE BOYLE REISSUE PATENT.

V.

STATEMENT IN REFERENCE TO THE BOYLE REISSUE.

The invention which constitutes the subject-matter of the Boyle reissued patent in suit consists in certain improvements in the type of double-trapped or siphon water-closets, which are set forth in the Peters and Donald patent, No. 260,232, and in the Boyle patent, No. 255,485, to which reference has already been made. In the water-closets set forth in both of these prior patents there are used (1) a water-closet bowl with two successive water seals or traps in its outlet passage and a confined air space between said two water seals or traps, (2) a flushing apparatus, consisting of a reservoir tank, having a vacuum chamber and a water-supply chamber with suitable valves, and (3) a flushing pipe connecting the water outlet of the flushing apparatus with the bowl to supply flushing water thereto, and an air pipe leading from the confined air space between the two water seals to the vacuum chamber, the entire apparatus acting in such manner that the flushing water as it falls from the vacuum chamber to the bowl creates a partial vacuum in said chamber and in the said confined air space, whereby the contents of the bowl are siphoned therefrom. In the water-closet which constitutes the subject-matter of the Boyle reissue in suit, the first feature above named is preserved, but instead of a vacuum chamber being employed a suction injector is used, with which the flushing pipe carrying water to the bowl and the air pipe leading from the

FIG. 1.

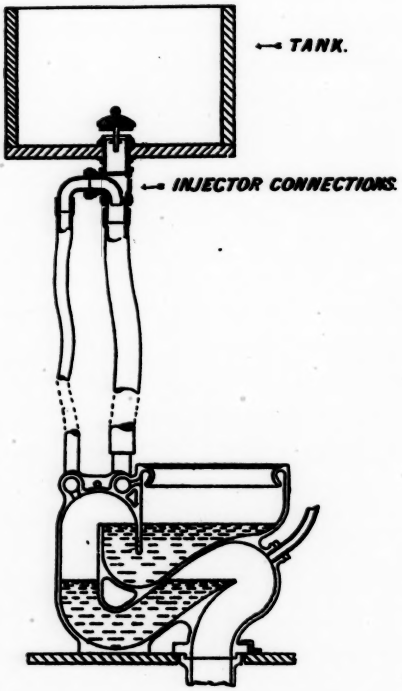

COMPLAINANTS' EXHIBIT No 15.

BOYLE'S EXPERIMENTAL TANK.

confined air space both communicate, so that when the flushing water flows through the injector the air is thereby sucked from the confined air space, whereby the siphoning action is effected and the contents of the bowl discharged. The novel feature of the invention of the reissue consists in the employment of a suction injector in combination with the other essential features of a siphon water-closet instead of the vacuum chamber of the preceding patents. The surrendered original patent, No. 291,139, of Boyle, as well as the reissue 10826, is in evidence. In the descriptions of both the objects and essential novelty of the invention are thus stated:

> "This invention relates to water-closets of the same general character as that described in my patent, No. 255,485, dated March 28, 1882, and has for its principal object to cheapen and simplify the overhead flushing apparatus." [16]
>
> "It will be seen that my present invention introduces a new principle for operating double-trapped or siphon water-closets, namely, that of producing the requisite vacuum by causing the falling flushing-water to act as an injector and draw air along with it." [17]

Boyle conceived this invention as early as October, 1881, and proceeded to test its operativeness and practicability by constructing and operating an experimental apparatus. [18]

The said experimental apparatus is illustrated in the exhibit which is reproduced on the opposite page. This exhibit shows all of the essential features of the invention. There is present the bowl having two successive water seals

---

NOTE 16.—*Exhibits*, pages 8 and 19.

NOTE 17.—*Exhibits*, pages 12 and 23.

NOTE 18.—*Record*, page 128, X Q. 561 to 568; page 109, Q. 332, 333.

or traps with an air space between them, an injector, an air pipe leading from the confined air space to the injector, a flushing pipe leading from the injector to the bowl, and a reservoir tank for supplying flushing water to the injector and thence to the bowl. This exhibit contains the injector, which is the distinguishing feature of the invention, and all the other parts of the combination necessary to produce the result of siphoning the contents of the bowl by the falling of the flushing water through the suction injector. This experimental apparatus, while demonstrating the operativeness of the invention and the correctness of the principles involved, nevertheless was not such an apparatus as to meet the requirements of the market and the demands of sanitary science. This experimental apparatus lacked (1) means for securing an "afterwash" to refill the bowl after the siphoning action had ceased; (2) means for venting the confined air space, so that any deleterious gases generating therein might be carried away; (3) a storage reservoir in connection with the supply tank for holding a volume of water sufficient to operate the closet several times, such a storage reservoir being necessary where the closet is used at short intervals or where the water supply is variable or inadequate; (4) means for delivering a measured or uniform volume of water at each operation of the closet, and (5) means for carrying off any overflow water from the overhead tank in case the valve supplying the same should leak. These five features (all of which were old at the date of the invention of the subject-matter of the reissue, all being shown, for example, in the prior Boyle patent, No. 255,485), while not strictly necessary to a water-closet and which do not in the slightest degree affect or modify the co-operative action of

the essential elements of the invention, nevertheless are features which are either necessary or desirable in an apparatus intended to meet the strictest requirements of the market for a first-class sanitary water-closet. Boyle accordingly proceeded to perfect his invention by making a water-closet containing the five features above specified in addition to those shown in the experimental tank. Aside from making some minor improvements, Boyle merely added to his central invention features which were then well known in the art.

The perfected apparatus is illustrated in Fig. 1 of the reissue patent in suit. In producing this perfected apparatus Boyle used, instead of the old "single-charge" tank employed in his first experiments, the old reservoir or "multi-charge" tank shown, for example, in his own prior patent, No. 255,485, in the Demarest patent, No. 212,133, dated February 11, 1879, or in the Craigie patent, No. 72,810, dated December 31, 1867.[19] To secure an after-wash Boyle used, with some minor improvements, the after-wash devices of his prior patent, No. 255,485. In both the original and reissue patents, referring to the "afterwash," Boyle says:

> "I have combined with this [*a*] means for securing the requisite after-wash to refill the bowl at the termination of the flushing, which means is practically the same as that set forth in my said patent, No. 255,485; but it is not essential that this particular means of securing the after-wash be used."[20]

The overflow and venting devices in the new closet were also taken from Boyle's prior patent, No. 255,485, as will be evident upon comparing the parts *m f* in the reissue with

---

NOTE 19.—See *Exhibits*, pages 14, 46, and 51, respectively.

NOTE 20.—*Exhibits*, pages 12 and 23.

the correspondingly lettered parts in patent No. 255,485; and the water-measuring devices of the new closet were copied from the Craigie patent, No. 72,810, dated December 31, 1867, and the Demarest patent, No. 212,133, dated February 11, 1879.

Having thus perfected his closet in a commercial and marketable sense, Boyle carried it to his patent solicitor, Mr. Arthur C. Fraser, for the purpose of having it protected by patent. The application was duly prepared and was filed in the Patent Office March 12, 1883, and the original patent, No. 291,139, was granted January 1, 1884.

Each of the six claims in the original patent specified (in terms) a flushing tank having two chambers, which, though a desirable feature of a first-class water-closet, is not essential to the operation of producing the siphoning action, and with respect to the injector occupies the relation merely of one of many known means for supplying the flushing water.

Boyle, relying upon the skill of his attorney and being unable in any case, through lack of legal knowledge, to detect the error, if any, in the phraseology of the claims in the original patent, supposed that his invention was fully protected by the patent which had been granted to him. The first intimation which Boyle received that his patent was insufficient to protect his invention arose under the following circumstances: Being in the habit of looking over the current numbers of the Official Gazette of the Patent Office, Boyle noticed patent No. 308,358, granted November 25, 1884, to Frank B. Hanson for improvements in water-closets, upon an application filed June 12, 1883. The drawing in the Hanson patent, it will be noted, is almost identical

with that of Boyle's experimental tank, Complainants' Exhibit No. 15. Boyle was unable to understand how the Patent Office had granted a patent to Hanson upon his (Boyle's) invention, and upon this point interrogated his solicitor, Mr. Fraser. Mr. Fraser investigated the matter of the grant of the Hanson patent, and advised Boyle that his (Boyle's) patent was defective and insufficient, and that the Hanson patent covered Boyle's invention broadly, so as to dominate the same. Fraser further advised Boyle that he should apply for a reissue of his patent and contest the question of priority of invention with Hanson. In accordance with this advice, Boyle's original patent was surrendered and the reissue application was filed January 2, 1885.[21] After a long contest in the Patent Office over the propriety of the reissue and the patentability of the invention, an interference was declared May 21, 1886, between Boyle and Hanson, which resulted in a decision March 7, 1887, awarding priority of invention to Boyle.[22] The reissued patent was thereupon granted to Boyle, April 19, 1887.

Subsequently to the grant of the reissue Boyle brought a suit in the circuit court of the United States for the southern district of New York against Hanson, under section 4918, Revised Statutes, for the purpose of setting aside and rendering void the interfering claims of said patent No. 308,358. This suit of *Boyle* vs. *Hanson* was pending concurrently with the case at bar, but was reached for hearing earlier. On June 6, 1888, his honor Judge William J. Wallace, of the second circuit, signed a decree adjudging that the Boyle reissue patent was a good and valid reissue; that Boyle was

---

Note 21.—See *Record*, pages 68, 69, 111.

Note 22.—See *Record*, page 272, Exhibit Ix.

the first inventor, and that the Hanson patent as to its interfering claims was invalid and void.[23]

Defendant did not commence the manufacture of water-closets (herein complained of as an infringement) until

---

NOTE 23.—The decree is as follows:

At a stated term of the circuit court of the United States of America for the southern district of New York, held at the United States court-rooms, in the city of New York, on the 6th day of June, 1888.

Present: Hon. William J. Wallace, judge.

JAMES E. BOYLE *vs.* FRANK B. HANSON. } In Equity. Interfering Patents.

This cause having heretofore been brought to a hearing on the pleadings and proofs therein and having been argued by W. C. Witter, Esq., on the part of complainant, and by Edwin H. Brown, Esq., on the part of defendant, and due deliberation had thereon:

Now, therefore, on motion of Albert Comstock, Esq., solicitor for said complainant, it is ordered, adjudged, and decreed as follows:

That the reissued letters-patent No. 10826, dated April 19, 1887, and granted to and owned by James E. Boyle, complainant, and the letters-patent No. 308,358, dated November 25, 1884, and granted to and owned by Frank B. Hanson, defendant, are, as to the first and second claims of said letters-patent, respectively, interfering patents.

That James E. Boyle, complainant, is the first and original and true inventor of the invention described in said letters-patent and specified in the first and second claims thereof, respectively.

That the entire right, title, and interest in and to said letters-patent No. 308,358 throughout the United States is owned solely by Frank B. Hanson, defendant.

That the first and second claims of the said letters-patent No. 308,358, dated November 25, 1884, and granted to and owned by Frank B. Hanson, defendant, are, and they are hereby adjudged and declared to be, inoperative, invalid, and void throughout the United States.

That the said reissued letters patent No. 10826, dated April 19, 1887, and granted to James E. Boyle, complainant, are, as to the first and second claims thereof, a good and valid reissue of the original letters-patent No. 291,139, dated January 1, 1884, and granted to said James E. Boyle, complainant, and that the said reissued patent is not improperly broadened and is not for a different invention from that of the original patent; that the said reissue was applied for without undue delay and for the purpose of correcting a defect and insufficiency in said original specification and claims,

April or May, 1887,[24] or about the time of the grant of the reissued patent, which occurred April 19, 1887, and more than two years after the reissue was applied for, the application having been made January 2, 1885.

There is no evidence in the case tending to show any use of the invention by any one except Boyle and his licensee during the interval between the date (January 1, 1884) of the original patent and that (January 2, 1885) of the application for reissue, and there was in fact no such adverse use. The grant of a patent to Hanson during this interval was the only semblance of an adverse right accruing, and whatever rights Hanson may have had have been duly adjudicated by a decree of the circuit court in the *Boyle* vs. *Hanson* suit, in which decree Hanson has acquiesced.

With a view to the comparison of the specification of the original patent with that of the reissue, the following contains the descriptive part of both of the specifications, the parts in italics (excepting reference letters) not being found in the original and the parts in brackets not being found in the reissue:

Be it known that I, James E. Boyle, [of] *a citizen of the United States, residing at* Brooklyn, in the county of Kings

which defect and insufficiency arose from inadvertence, accident, or mistake; that said complainant did not, by abandonment, lose or impair his right to obtain the said reissue.

That the said reissued letters-patent No. 10826, dated April 19, 1887, and granted to and owned by James E. Boyle, complainant, are, as to the first and second claims thereof, good and valid letters-patent.

And it is further ordered, adjudged, and decreed that the said complainant recover of the defendant his costs and charges and disbursements in this suit, to be taxed.

(Signed) WM. J. WALLACE.

NEW YORK, *June* 6, 1888.

NOTE 24.—See *Record*, page 317, X Q. 83.

and State of New York, have invented certain improvements in flushing apparatus for water-closets, of which the following is a specification.

This invention relates to water-closets of the same general character as that described in my patent No. 255,485, dated March 28, 1882, and has for its principal object to cheapen and simplify the overhead flushing apparatus.

Figure 1 of the accompanying drawings shows the preferred form of my invention in vertical section, the tank being connected with a water-closet bowl of the character shown in my said patent. Figs. 2 and 3 are diagrams showing the same construction of tank in two different conditions. Figs. 4 and 5 are vertical sections of two modified forms of tanks; and Fig. 6 is a diagram showing another modification.

Referring to Fig. 1, A is the bowl, and B the soil passage leading therefrom and forming traps C and D and intervening air-space, *d*. E is the service tank or cistern, supplied with water through a float-valve, which keeps it filled normally to the level shown. F is the flushing-chamber, *l* the flushing-pipe leading down from the bottom of this chamber to the flushing-rim *k* of the bowl, and *e* the air-pipe or suction-pipe leading from the air-space *d* to the top of the chamber F. These parts are all of substantially the same construction asthe like-lettered parts in my said patent, except in the particulars hereinafter described. The chamber F is arranged wholly below the tank E, with the exception of an upward extension through the tank formed by a tube, F′, to the top of which the vent-pipe *f* is connected. There need be no check-valve in this pipe. The suction-pipe *e* rises through the chamber F, inside the tube F′, and nearly to the top of the latter, its open upper end being above the water-level in the tank. Inside the tube F′ is fixed a tube or air-bell, *n*, the top of which extends slightly above the top of the pipe *e*, and is closed, and the bottom of which is open and extends nearly to the bottom of the chamber F. Inside of the tube *n*, and between it and the pipe *e*, is placed a pipe, *r*, the upper end of which is open and extends preferably above the water-level in the tank E, but not so high as the top of the pipe *e*, and the bottom of which extends through the bottom of the chamber F and connects with a passage-

way, *s*, formed in a casting, G, which is fastened beneath the chamber. This casting extends to the right, and the outlet-orifice *i* at the bottom of the chamber opens into it. Beneath this orifice the flushing-pipe *l* is connected to the casting G. The orifice *i* is surrounded with a pendent flange or short downwardly-projecting tube which depends into the casting G, and this orifice and casting, in connection with the flushing-pipe *l*, form a suction-injector, I, the operation of which causes a suction through the passage (lettered *t*) formed by the tube *r* and passage-way *s*, as will be presently explained.

There is but one valve—the *flushing*-valve *h—which closes* [closing] the inlet-opening *h'* to the chamber F. This opening should be about three inches in diameter, and the outlet-orifice *i* should be about three-fourths or seven-eighths of an inch in diameter, or the two may be of other dimensions in approximately the same proportion. The valve *h* is connected by a stem or chain to a weighted lever, *p*, which keeps the valve normally closed, and is operated to open it by a pull connected to it through a wire or chain, *q*, in any usual manner. The overflow pipe *m* is shown as passing through the valve *h* and serving as its stem. This pipe is trapped by a cup, *m'*, which incloses its lower end and rises and falls with it.

In my said patent the flushing-chamber F is a sealed chamber and operates during the flushing to produce a suction in the pipe *e* by means of a vacuum. In my present invention the flushing-chamber is not sealed, and consequently is not a vacuum-chamber, and the suction is produced [in great part] by the action of the injector I, as will presently be described.

The operation of my invention will be best understood from the diagrams, Figs. 2 and 3. In these the pipe *e* is not shown as passing through the pipe *r*, but for clearness the two are placed side by side, and the bell *n* and upward extension F' are exaggerated. The normal water-level in the tank E is shown by the line *x x*. The parts are shown in Fig. 1 in their normal condition, the chamber F being empty and the valve *h* closed. When the person using the closet pulls *down* [downward] on the wire or chain *q* through the usual pull-handle or other suitable appliance, the valve *h* is

lifted and water from the tank E commences to flow rapidly into the chamber F, and immediately thereafter to flow outward through the orifice *i*. Fig. 2 shows the parts in this condition. As the inlet-orifice *h'* has about sixteen times the area of the outlet orifice *i*, the water enters the chamber F much more rapidly than it can escape from it and quickly fills the chamber, expelling the air through the tube F' and pipe *f*. By the time the chamber is thus filled the water running out through the orifice *i* and descending the flushing-pipe will commence to flow into the bowl A, and the user hearing it will then naturally release the pull, whereupon the valve *h* will drop back to its seat. The water contained in the flushing-chamber will then continue to flow out through the orifice *i* until the chamber is emptied. Fig. 3 shows the apparatus shortly after the valve *h* is closed. From the time the water entering the chamber reaches the orifice *i* until the chamber is emptied there is a continuous stream of water flowing out through this orifice, falling through the cavity or injector-chamber in the casting G and flowing down the flushing-pipe. In crossing the cavity in the casting it encounters and carries with it a portion of air and so creates a partial vacuum in this cavity in the manner common to injectors. This partial vacuum or suction extends up through the passage *t* into the bell *n*, from which it draws the air for an instant, and until the water in the chamber F rises above the bottom end of this bell, and so seals it and prevents any further flow of air into it. The rarefaction rapidly increases from that instant, and air is drawn up through the pipe *e* and from the space *d*. The effect of this rarefaction is to siphon the trap C, or cause the water to flow over from this trap and fall into the trap D, and this siphoning proceeds rapidly until the water-level in the bowl A is lowered to the outlet-opening *a*, whereupon air enters the space *d* from the bowl and breaks the vacuum. This breaking of the vacuum should occur shortly after the first of the flushing-water reaches the bowl, and thereafter the water enters the bowl and is as rapidly drawn out by the siphoning of the trap, thereby causing a powerful outflow through the bowl and soil-passage, which carries with it the entire contents of the bowl. In the course of this operation the vacuum may be broken several times by entrance of air from the bowl. In any case the rarefaction

in the bell *n* will cause the water to rise to a greater height in it than in the chamber F, as shown in Fig. 3, and if the suction is sufficiently strong the water in the bell will be drawn up to the top of the pipe *r*, and will descend through the passage *t* mixed with air. Thus the water will be drawn from the chamber F to the pipe *l* through two conduits simultaneously. The rarefaction in the bell *n*, pipe *e*, and space *d* will continue until the water in the chamber has so far run out as to unseal the bottom of the bell, whereupon the vacuum is broken finally by the entrance of air into the bell, and thereupon the remaining water will flow into the bowl as an "after-wash," and will fill it up to the level shown, leaving it ready for the next use of the closet. The precise operation will depend upon the proportioning of the parts, as by altering the relative capacities of the trap C, space *d*, pipe *e*, bell *n*, passage *t*, and chamber F, and the relative areas of the orifices *h'* and *i* the operation might be considerably modified.

I have stated that the person using the closet will naturally release the pull when he hears the water pouring into the bowl, and if the parts are so proportioned that when this occurs the chamber F will be filled the operation will almost invariably be satisfactory. If he should release the pull too quickly, the only result would be a proportionately shorter flush, and if he should hold the pull too long the flush would be unnecessarily prolonged, the only disadvantage of which would be a waste of more or less water. To prevent the latter contingency a self-seating valve may be used as the flushing-valve. The valve shown in my patent No. 249,577, dated November 17, 1881, will answer the purpose well.

Fig. 4 shows a modification in which a valve of this character is used in connection with a different lever arrangement. The wire *q* is to be connected to the water-closet seat, and the weight on the lever tends to lift the valve. The parts are shown in full lines in the normal position. When the seat is depressed the lever is tilted to the position shown in dotted lines, thereby forcing down the piston *v* in the cylinder *w*, which is fixed to the valve *h*. The piston has a cupped leather packing, which permits the water to escape around it during its downward movement. The parts remain thus until the user rises from the seat, whereupon the lever

is tilted by its counter-weight back to its normal position and the piston *v* is lifted. The piston in lifting carries with it, by suction, the cylinder *w*, and so lifts the valve *h* to the position shown in dotted lines. The cylinder *w* has a small inlet-conduit or leak-passage, *y*, adjusted by a screw, *z*, and as water slowly enters through this conduit the valve slowly descends, and finally seats itself. The adjustment should be such that the valve will seat itself as soon as the chamber F is filled. In other respects the operation is the same as already described. The overflow-pipe *m* is placed at one side and fixed in place and its lower end is sealed in a fixed cup, *m'*.

Fig. 5 shows how two valves may be used, the arrangement of the valves and the lever being the same as in my said patent No. 255,485. The outlet orifice *i* is made larger than in the construction before described, and the valve *j*, fixed to the stem *u'*, works up and down through this orifice, and when lowered seats itself on the bottom of the casting G over the orifice *i'*, whence the flushing-pipe leads. The valve *j* nearly fills the orifice *i*, the area of the intervening annular space being about the same as of the orifice *i* in Fig. 1. The two valves are so arranged that when the lever is at mid-stroke both are seated; but when the lever is at either extremity of its stroke one valve is seated and the other is lifted. The upward extension F' and bell *n* are no longer distinct, and a check-valve, *g*, is interposed between the interior of the bell and the air-pipe *f* leading from its top.

The parts are shown in their normal position. When the seat is depressed, the valve *j* is seated and the valve *h* is lifted. The chamber F is quickly filled through the orifice *h'*, and water flows thence into the bell *n*, the air therein escaping through the valve *g*. Water also flows through the annular opening *i*, and fills the passage *t* to the same level. The chamber F, bell *n*, and passage *t* remain full until the seat is released, whereupon the valve *h* closes and the valve *j* opens. The water from the passage *t* and chamber F then commences to run out into the pipe *l*, the former flowing the more rapidly and instantly producing a suction, which should suffice to lift the water in the bell *n* and cause it to flow down the passage *t*. The water from the chamber F flows out through the annular orifice *i*, and descends through

the flushing-pipe, and acts to cause a suction or rarefaction in the same manner as in Fig. 1. This construction causes a more powerful and rapid suction than the other; but I prefer that first described, because of its greater cheapness, as its action is practically sufficient.

It will be seen that my present invention introduces a new principle for operating double-trapped or siphon water-closets—namely, that of producing the requisite vacuum by causing the falling flushing-water to act as an injector and draw air along with it. I have combined with this *a* means for securing the requisite after-wash to refill the bowl at the termination of the flushing, which means is practically the same as that set forth in my said patent No. 255,485; but it is not essential that this particular means of securing the after-wash be used.

The diagram, Fig. 6, is designed to illustrate the essential principle of my present invention even more clearly than the preceding figures. The air-pipe *e* does not enter the chamber F, but is connected by a branch with the flushing-pipe *l* below the chamber, the injector I being arranged at their junction. The *check*-valve *g'* is shown merely to prevent water setting back and flowing down the pipe *e*, since the top of this pipe is below the water-level *x x*, instead of above it, as before. *When the flushing-valve* h *is lifted, the water from the tank E flows down the flushing-pipe* l, *and through the injector I, thus drawing air from the pipe* e *during the whole time that the water continues to flow through the injector. In this construction the chamber F has no function of its own, and constitutes, essentially, a mere enlargement of the upper portion of the flushing-pipe, to the same effect as the ordinary "service-box" commonly used by plumbers.* No provision for securing an after-wash is here shown; but the bowl may be refilled after the flushing by any suitable means—as, *for instance,* by water admitted by a valve through an independent flushing-pipe, *as shown in the patent of Peters & Donald, No.* 260,232, *dated June* 27, 1882.

In order that the claims of the original and reissue patents may be more readily compared, they are here produced in parallel columns, the italicized words in each claim of one patent showing wherein it differs from the corresponding claim in the other patent:

ORIGINAL PATENT.

1. A flushing apparatus for water-closets, consisting of a reservoir-tank, a flushing-*chamber adapted to be filled therefrom*, *a* valve controlling *the admission of water from said tank to said chamber*, a suction-injector arranged *beneath the outlet from said chamber*, a flushing-pipe *leading from said injector*, and a suction *or air* pipe *communicating* with said injector, *all combined and arranged substantially as set forth*, whereby the water in *escaping* from said *chamber into* the flushing-pipe traverses said injector, and sucks the air from said suction-pipe.

2. The combination of a reservoir-tank, a flushing-chamber, a valve controlling the admission of water from said tank to said chamber, a suction-pipe *terminating at the upper part* of said chamber, an injector beneath the outlet from said chamber, a flushing-pipe leading downward from said injector, and a suction-passage affording communication from said injector to said suction-pipe, substantially as and for the purposes set forth.

3. A flushing apparatus for water-closets, consisting of a reservoir-tank, a flushing-*chamber*, *a* valve controlling the *admission of water*

REISSUE PATENT.

1. A water-closet consisting of a bowl, with the soil-passage leading therefrom and two successive traps in said passage, in combination with a flushing-pipe for conveying water to the bowl, a suction-injector arranged in connection with said pipe and to be traversed by the flushing-water, and an air-pipe leading from the air-space between said traps and communicating with said injector, substantially as set forth, whereby the flow of water through said injector serves to draw air from said air-space.

2. A flushing apparatus for water-closets, consisting of *the combination of* a reservoir-tank, a flushing-valve controlling *the outlet thereof*, a flushing-pipe *for conveying water therefrom to the bowl of the closet*, a suction-injector arranged *in connection with said pipe and to be traversed by the descending flushing-water*, and a suction-pipe *in connection* with said injector, whereby the water in *flowing* from said *tank downward through* the flushing-pipe traverses said injector and sucks the air from said suction-pipe.

3. The combination of a reservoir-tank, a flushing-chamber, a valve controlling the admission of water from said tank to said chamber, a suction-pipe *communicating with the interior* of said chamber, an injector beneath the outlet from said chamber, a flushing-pipe leading downward from said injector, and a suction-passage affording communication from said injector to said suction-pipe, substantially as and for the purposes set forth.

4. A flushing apparatus for water-closets, consisting of a reservoir-tank, a flushing-valve controlling the *outlet thereof*, a flushing-pipe *for*

from said tank to said chamber, a suction-injector *beneath the outlet from said chamber*, a flushing-pipe *leading downward from said injector*, a suction *or air* pipe *opening into the upper part of said chamber, and a suction-passage extending from said pipe to said injector*, whereby the passage of water through said injector *into the flushing-pipe* will *develop a suction in* said *suction-passage and* suction-pipe, *in combination with means, substantially as described, for admitting air to said suction passage or pipe, and so breaking the vacuum therein before all the water has escaped from the chamber, whereby an after-wash is secured, all combined and arranged to operate* substantially as set forth.

4. In combination, the tank E, the chamber F, provided with inlet-orifice *h'* and outlet-orifice *i*, the valve *h*, the suction-injector I, the flushing-pipe *l*, the air-pipe *e*, the suction-passage *t*, and the air-bell *n*, substantially as set forth.

5. A flushing apparatus for a water-closet, consisting of the combination of a reservoir-tank, a flushing-chamber provided with an inlet-orifice of large area communicating with said tank, and with an outlet-orifice of contracted area proportioned to the area of said inlet-orifice, substantially as specified, a valve adapted to close said inlet-orifice, an air-pipe opening into said flushing-chamber, and a flushing-pipe leading from said outlet-orifice, all arranged and adapted to operate substantially as set forth.

6. The combination, with tank E and chamber F, of the valve h *thereof, its stem consisting of an overflow-tube*, m, *and a sealing-cup*, m', *below the valve, in which cup the lower end of the overflow-tube is immersed, substantially as set forth.*

conveying water therefrom to the bowl of the closet, a suction-injector *arranged in connection with said pipe and to be traversed by the descending flushing-water, and* a suction-pipe *in connection with said injector*, whereby the passage of water through said injector will *suck the air from* said suction-pipe, *all combined together, and with a trapped air-passage communicating with the said suction-pipe and arranged to be unsealed and thereby to admit air to the suction-pipe and break the vacuum therein before the cessation of the flow of flushing-water*, substantially as set forth.

5. The combination *of* the tank E, the chamber F, provided with inlet-orifice *h'* and outlet-orifice *i*, the valve *h*, the suction-injector I, the flushing-pipe *l*, the air-pipe *e*, the suction-passage *t*, and the air-bell *n*, substantially as set forth.

6. A flushing apparatus for a water closet, consisting of the combination of a reservoir-tank, a flushing-chamber provided with an inlet-orifice of large area, communicating with said tank and with an outlet-orifice of contracted area proportioned to the area of said inlet-orifice, substantially as specified, a valve adapted to close said inlet-orifice, an air-pipe opening into said flushing-chamber, and a flushing-pipe leading from said outlet-orifice, all arranged and adapted to operate substantially as set forth.

Of the claims in the reissue, only claims 1 and 2 need be considered, since only these claims are involved in this suit, being the only claims alleged to be infringed. [a]

NOTE *a.*—See bill of complaint, paragraph 13, page 5, *Record;* also pages 57, 58 of the *Record.*

The change introduced by the reissue in the claims here pertinent can be best seen by comparing claims 1 of the original and 2 of the reissue, the recited elements of which are as follows:

Original Patent.	Reissued Patent.
1. A reservoir tank.	1. A reservoir tank.
2. A flushing valve.	2. A flushing valve.
3. A separate flushing chamber.	
4. A suction injector.	3. A suction injector.
5. A flushing pipe.	4. A flushing pipe.
6. An air pipe.	5. An air pipe.

The difference is thus seen to consist of the omission in claim 2 of the reissue of the separate flushing chamber as a separately recited feature. The difference between the two claims will be apparent upon considering the drawing on the opposite page, claim 2 of the reissue reciting *any* tank, and claim 1 of the original patent specifying the two chambers of the tank at the left.

Claim 1 of the reissue, however, most clearly expresses the real invention. It does not specify the character of the tank or other water-holding or supply apparatus, but it specifies only those elements which are shown in the lower part of the opposite drawing and therein referred to by the words, "These are the essential elements of Boyle's invention." For convenience of comparison we here again reproduce the first claim of the reissue:

> "1. A water-closet consisting of a bowl, with the soil-passage leading therefrom and two successive traps in said passage, in combination with a flushing-pipe for conveying water to the bowl, a suction-injector arranged in connection with said pipe and to be traversed by the flushing-water, and an air-pipe leading from the air-space between said traps and communicating with said injector, substantially as set forth, whereby the flow of water through said injector serves to draw air from said air-space."

EXAMPLES OF TWO DIFFERENT

"Sources of Water" or Flushing Tanks,

Both of which were well known in the Art prior to Boyle's Invention.

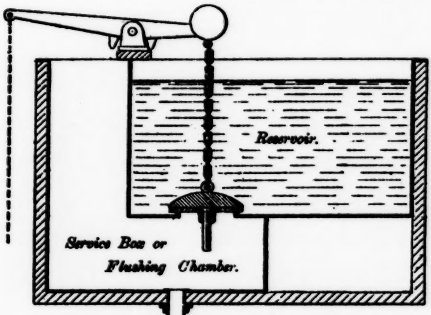

MULTI-CHARGE OR RESERVOIR TANK.

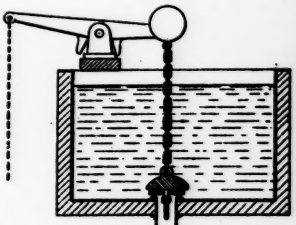

SINGLE-CHARGE TANK.

Any "Source of Water" (such for example as either of the above tanks), to be connected to this Flushing Pipe.

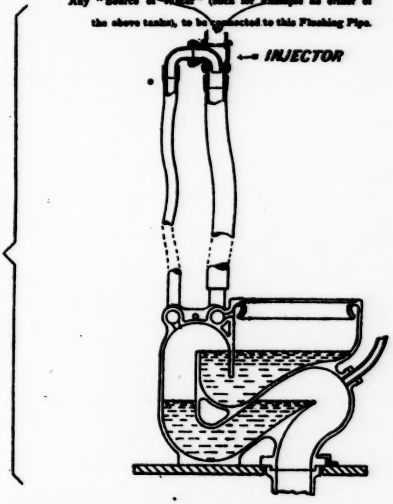

ESSENTIALS OF BOYLE'S INVENTION.

This claim is the one which is most fully in accord with the statement contained in the original as well as the reissue, that—

> "It will be seen that my present invention introduces a new principle for operating double-trapped or siphon water-closets, namely, that of producing the requisite vacuum by causing the falling flushing water to act as an injector and draw air along with it."

It is manifestly wholly immaterial to the invention thus clearly expressed what the character of the water-supply apparatus is—whether it is an overhead tank with one, two, or more chambers, such as are now more usually employed, or whether the water is supplied by an ordinary water-pipe with a stop-cock or other valve in it, in the well-known manner such as is customary with cheap or "servants'" closets.

VI.

ERRORS IN THE OPINION OF THE COURT BELOW IN REFERENCE TO THE BOYLE REISSUE.

The court below, in holding the reissue to be invalid and dismissing the bill on that ground, made the following errors:

1. The court below erred in holding and deciding that an "after-wash" constituted an essential part of the invention patented.

2. The court below erred in holding and deciding that a two-chambered water-tank—that is, both a flushing chamber and a water reservoir, as separate features, was essential to produce the after-wash.

The particular language of the court in which these two errors of fact are found is as follows:

> "The testimony shows to my entire satisfaction that Fraser was right in supposing that Boyle's flushing apparatus without the flushing chamber would be incomplete, and for that reason practically valueless. Mr. Hanson, who, subsequently to the date of Boyle's invention, secured a patent on a water-closet having a single water reservoir and an injector, but no flushing chamber or provision for an after-wash, and who by so doing caused Boyle to apply for a reissue that would invalidate Hanson's patent, is compelled to admit that a water-closet constructed according to the specifiation of his patent is defective and unsalable, and for that reason has never been put upon the market.
>
> "Boyle, Hanson, and Fraser substantially agree that some mechanism to secure an after-wash automatically (that is to say, some mechanism to flush the closet and refill the bowl at the end of the flush by a single pull at the lever) is essential to the successful operation of a flushing apparatus; that without such mechanism an apparatus constructed with double traps and an injector to exhaust the air between the traps would be useless in the sense that there would be no demand for such an apparatus. It would seem, indeed, that Boyle displayed quite as much (if not more) ingenuity in devising the mechanism to produce an after-wash as in employing an injector, which was an old device to pump the air from between the traps."
>
> "So far as I can see, the testimony in the case does not tend to establish that either Boyle or Fraser acted so inadvertently or labored under such misapprehension, either of matters of law or fact, when the claims of the original patent were formulated as justified a reissue of the patent under the law as declared in these cases. It was obvious to them, as it is to any one, that the injector would perform its function as well with a single water tank as with a tank and flushing chamber combined. They both believed

that a water-closet constructed according to Boyle's design, but without provision for an after-wash, would be valueless in the market, and in that they were right. The patentee had discovered no method of producing an after-wash automatically by using a single water tank, and hence both he and his solicitor regarded the flushing chamber as one of the essential features of the flushing apparatus intended to be manufactured, and accordingly claimed it industriously in all of the important claims. Conceding that they claimed the "injector" in combination with a part that was non-essential to its operation, and thereby limited the claim, yet they did so in pursuance of a well-defined purpose that was not based upon misconception of matters of fact or ignorance of the law, so far as the records before the Commissioner or the proof in this case shows."

"As the claims are stated and enlarged in the reissue, it would be unlawful for a mechanic to use the injector in the construction of a flushing apparatus, even if he should succeed in doing what Boyle failed to accomplish—that is to say, in producing an after-wash automatically by the use of a single tank—because the parts with which the injector has been combined in the claims of the reissue are so few that they must necessarily all be used to work the injector."

3. The court below erred in holding and deciding that the original patent was inoperative or invalid only because it failed to claim a particular combination of parts which might have been claimed originally. Touching this the court said:

"In the first place, it will be well to understand clearly what is meant by the assertion that the original patent was '*inoperative to protect the invention intended to be covered by it.*'

"The original patent certainly protects the flushing apparatus that was claimed as a whole in the first claim and carefully described in the drawings. It

> also protects all the combinations claimed in the several claims of the original patent. It was not necessary to change a word in the specification or alter a line in the drawing to fully secure the apparatus so claimed, and it appears that that was the identical flushing apparatus or water-closet which the patentee intended to manufacture and that his licensee is now manufacturing. It cannot be said, therefore, that the original patent was '*inoperative and invalid*' in the sense that what the patentee claimed and intended to manufacture he cannot hold in consequence of the original specifications being either 'defective or insufficient.' In the light of these facts, when the patentee asserts that the original patent was 'inoperative' no more is meant than that a particular combination of parts might have been claimed originally (and possibly would have been allowed) that was not claimed, and that the original patent was inoperative to protect that *particular combination*, because no right to protection was asserted."

4. The court below erred in holding and deciding that the effect of the reissue "was clearly to expand the claims of the original patent by as much as the addition of the flushing chamber to the combination claimed in the original patent had served to limit them;" that the effect of the reissue was "merely to enlarge the claim," and that Boyle's "sole object in asking for a reissue was to slough off one element of the combination." In this connection the court below said:

> "Boyle's sole purpose in asking for a reissue was confessedly to eliminate the 'flushing chamber' as a constituent element of the combination covered by certain claims of his original patent, particularly the first claim. In other words, he desired to recast his claims so as to obtain a patent for a flushing apparatus like that described above in the first claim *minus the flushing chamber*."

5. The court below erred in holding and deciding that there was no inadvertence, accident, or mistake committed in the wording of the claims in the original patent. Touching this the court said:

> "Although the original patent was inoperative to protect a particular combination not claimed therein, to which the inventor now conceives himself to be entitled, yet the failure to claim it was not due to any such inadvertence or mistake as will now entitle him to claim it, the inevitable result being to expand the old claims."

6. The court below erred in considering the question of whether there was an inadvertence, accident, or mistake committed in wording the original patent and adjudicating the reissue invalid for the absence of such inadvertence, accident, or mistake.

7. The court below erred in holding and deciding that "the claims in the reissued letters, or some of them at least, are now so broad as to practically cover the injector as a thing susceptible of being separately claimed."

8. The court below erred in holding and deciding that "the failure to claim such combination [that is, the combination of claims 1 and 2 of the reissue] originally, even if it was one that ought to have been allowed if claimed, occurred under such circumstances and was accompanied with such full knowledge of all material facts as amounted to an abandonment of that particular combination to the public."

VII.

Brief of the Argument in Reference to the Boyle Reissue.

(*a.*)—CONCERNING THE ERRORS OF THE COURT BELOW.

As will be seen from the foregoing quotations, the opinion of the court below contains an elaborate argument in support of the conclusion reached, and presents, as we respectfully submit, many material and serious errors of fact as well as of law. While it is our purpose to examine these fully and in detail, we conceive that the decision of this court will turn upon a few leading points or propositions of fact and law. Before proceeding therefore to a minute analysis of the errors of the court below and of the testimony pertinent thereto, we will state in a comprehensive manner those leading aspects or features of the case by which the court will presumably be most impressed and influenced in its conclusions.

The question to be decided is this: Has the Boyle patent been *unlawfully expanded* by reissue?

The elements entering into the determination of this question are (1) the improvement actually invented by Boyle and which his patent was intended to cover; (2) the scope of the original and of the reissued patent, and (3) the defendant's equities.

The first element is to be ascertained from the specification of the patent and by comparing the Boyle device with those in the prior art bearing the nearest resemblance to it. Beyond any doubt Boyle's main invention consisted in com-

bining with the pneumatic or siphon closet *a suction injector*. That is what essentially characterized his invention and what he was entitled to secure by letters patent. His specification so states in unmistakable language. Moreover, on comparing Fig. 1 of the Boyle patent in suit with the prior patents above referred to we find substantially every feature of that device (certainly every element specified in claim 1 of the original patent) in one or more of these prior patents, with the conspicuous exception of the injector. The inevitable conclusion, therefore, is that Boyle was entitled to claim broadly the combination of the new feature of the suction injector with the *essential* old features of the pneumatic or double-trapped closet.

This being Boyle's invention, it is next in order to ascertain what his original patent actually secured to him, for obviously the contention by the present appellee that the reissue is an unlawful expansion assumes that the structure of the appellee would not infringe the original patent under any fair interpretation thereof.

If it were necessary to determine absolutely the scope of the original claim, we would follow precisely the course pursued above—*i. e.*, we would ascertain by reference to the specification and to the prior art what Boyle actually did invent, and so construe his claim as to cover that invention, if it could be done without doing violence to the language of the claim.[25]

NOTE 25.—"If by examination of the specification and applying to it the then existing state of the prior art we can learn *what the invention was*, then the claim, which is designed to be a condensed summary of the invention, is to be construed so as to be co-extensive with the invention, if this can be done without doing violence to its language." (*Andrews* vs. *Carman*, 13 Blatch., 307.)

Now, the function of the combination specified in claim 1 of the original patent is stated in these words: "Whereby the water, in escaping from said chamber into the flushing pipe, traverses said injector *and sucks the air from said suction pipe*." The relative values of the several devices enumerated in the claim are to be determined by their contribution to that function, from which it proceeds that the reservoir tank and flushing chamber recited in the claim are merely *a* means for supplying water to operate the injector. Under a well-settled rule of law this claim would not be evaded by substituting for the specific means of water supply pointed out other equivalent and well-known means for accomplishing the same result, an "equivalent" in such case being a device which performs substantially the same function in substantially the same way.[26] This function is per-

NOTE 26.—"Though some of the corresponding parts of the machinery designated in this combination are not the same in point of form in the two bolting apparatuses, and, *separately considered, could not be regarded as identical or conflicting*, yet, *having the same purpose in the combination* and effecting that purpose in substantially the same manner, they are the equivalents of each other *in that regard*."

Cochrane vs. *Deener* (94 U. S., 780).

"If two devices do the same work in substantially the same way and accomplish substantially the same result, they are the same, even though they differ in name, form, or shape."

Machine Co. vs. *Murphy* (97 U. S., 120).

"It is well known that the claim of a combination is not infringed if any of the *material* parts of the combination are omitted. It is equally well known that if any one of the parts is only formally omitted and is supplied by a mechanical equivalent, performing the same office and producing the same result, the patent is infringed."

Water Meter Co. vs. *Desper* (101 U. S., 335).

The invariable mode of determining identity or dissimilarity of corresponding parts is by reference to their function. Though a simple tank and a two-chambered tank, "separately considered, could not be regarded as identical, yet, having the same purpose in the combination" defined in claim 1 of the original patent, "they are equivalents of each other in that regard."

formed by any tank, reservoir, receptacle, or conduit provided with a valve, of which there are many varieties available; consequently it is a reasonable contention that if the defendant had been sued upon the original patent such suit would have resulted in a decision that the defendant's structure appropriates the whole of Boyle's invention, and that infringement is not avoided by the omission of one of the parts and the substitution therefor of a mechanical equivalent which sustains exactly the same relation to the other parts as that which it displaced.

It is clear that, having regard to the function of claim 1, the flushing chamber is merely a portion of the path which the water traverses on its way to the injector, and this is not a mere after-thought, for Fig. 6 of the original and of the reissued patent was introduced to show that very fact. The original patent says that the purpose of this diagram (Fig. 6) is "to illustrate the *essential principle* of my present invention even more clearly than the preceding figures."

Since in construing a specification effect must be given to every part thereof,[27] we confidently submit that this explanation of Fig. 6, coupled with the very clear statement which precedes it of what constitutes the principle of the invention, would justify the court in regarding the reservoir tank and flushing chamber as subordinate elements of the claim, such as could be omitted without changing its scope so long as other devices were employed to perform the function they subserve.

NOTE 27.—In *Merrill* vs. *Yeomans*, 94 U. S., 568, this Court referred to the rule that effect and meaning *must be given* to all parts of an instrument, and, the claim being there of uncertain meaning, the Court was guided by the language of the specification, and particularly by "the sentence next preceding the claim."

Examining now the defendant's structure (Complainant's Exhibit No. 10, *Record*, page 54, and White's patent No. 363,566, *Exhibits*, page 33), it will be seen that it has not only the flushing pipe, the suction pipe, and the injector, but it has also a tank, a chamber just beneath it which is "adapted to be filled therefrom," and "a valve controlling the admission of water from said tank to said chamber."

Said chamber does not, it is true, serve as a measurer of the water supplied, but that does not affect the operation of the injector. It does serve to conduct water to the injector, which is the sole function of Boyle's flushing chamber in the combination of claim 1 of the original patent.

In this view of the case the reissue is not an expansion in the sense of including an invention not contemplated by the original patent, for the latter could have been held to cover the defendant's apparatus by the application of the same liberal rules of interpretation which this court has invariably applied in similar cases.

At the same time there is no doubt that when Mr. Fraser prepared the application of the original patent he regarded the flushing chamber as an indispensable element of the structure, and that he drew claim 1 with that understanding. Neither is there any doubt that the claim, if strictly construed, would be held to be limited to a reservoir tank and flushing chamber. In fact, the Patent Office in the issue of the Hanson patent totally ignored Boyle's claim to the new principle of "producing the requisite vacuum by causing the falling flushing water to act as an injector;" hence the necessity for reissuing the patent—to secure, not a claim for a different invention, but a claim stating and defining clearly and without ambiguity or uncertainty

that invention which it was the purpose of the original patent to secure, as shown by the two paragraphs immediately preceding the formal claims.

Therefore, by (1) ascertaining what the patentee really invented and (2) determining the scope of the original and of the reissued patent, we arrive at the conclusion that the latter is not expanded so as to include more than the former would by fair interpretation have been held to cover.

In other words, our first argument is that the Boyle reissue does not present an expansion of the original patent. The Commissioner of Patents in reissuing the patent with claims defining specifically and with precision the invention made by Boyle has done, in the exercise of his lawful authority, just what the courts would have done by judicial interpretation had suit been brought upon the original patent.

The fundamental error of the decision below is found in these words: "I am forced to the conclusion that the reissued letters, granted under the circumstances and for the purposes hereinafter stated—that is, *merely to expand the claims*—cannot be sustained as a valid grant." The conclusion that the purpose of the reissue was merely to expand the claims is an error of fact. The conclusion that a reissue merely to expand the claims cannot be sustained as a valid grant when seasonably applied for is an error of law.

In the second place, then, we submit that if the reissued patent be an expansion it is not an *unlawful* expansion. This proposition brings into consideration (1) the lapse of time between the grant of the original patent and the application for the reissue and (2) the defendant's equities. If Boyle failed through inadvertence, accident, or mistake to secure a patent clearly and fully commensurate with his

invention he had the right, within a reasonable time, to surrender the defective patent and reissue it to cover his invention completely, provided that no adverse vested interests had intervened of such nature as to constitute an equitable bar to the grant of the reissue.

In this case the delay (of one year) was not unreasonable, and as for the defendant's equities it suffices to say that the reissue was not sought to cover their structure, for it did not exist until long thereafter.[28]

NOTE 28.—In *Topliff* vs. *Topliff*, 145 U. S., 156, this Court made a review of all the decisions adverse to reissued patents since *Miller* vs. *Bridgeport Brass Co.*, and concluded in these words:

"From this summary of the authorities it may be regarded as the settled rule of this Court that the power to reissue may be exercised when the patent is inoperative by reason of the fact that the specification as originally drawn was defective or insufficient, or the claims were narrower than the actual invention of the patentee, provided the error has arisen from inadvertence or mistake and the patentee is guilty of no fraud or deception, but that such reissues are subject to the following qualifications:

"First. That it shall be for the same invention as the original patent, as such invention appears from the specification and claims of such original.

"Second. That due diligence must be exercised in discovering the mistake in the original patent, and that, if it be sought for the purpose of enlarging the claim, the lapse of two years will ordinarily, though not always, be treated as evidence of an abandonment of the new matter to the public to the same extent that a failure by the inventor to apply for a patent within two years from the public use or sale of his invention is regarded by the statute as conclusive evidence of an abandonment of the patent to the public.

"Third. That this Court will not review the decision of the Commissioner upon the question of inadvertence, accident, or mistake unless the matter is manifest from the record, but that the question whether the application was made within a reasonable time is in most, if not in all, such cases a question of law for the court.

"To hold that a patent can never be reissued for an enlarged claim would be not only to override the obvious intent of the statute, but would operate in many cases with great hardship upon the patentee. The specification and claims of a patent, particularly if the invention be at all complicated, constitute one of the most difficult legal instruments to draw with accuracy, and, in view of the fact that valuable inventions are often placed in the

If the foregoing propositions be sound they are decisive of the case, but for the purpose of exposing completely the error of the decision in the court below we will now examine in detail the particular points of error in the order recited above.

THE "AFTER-WASH" ERROR.

1, 2. The court assumed that an "after-wash" was an essential element of Boyle's patented invention; that a separate and distinct flushing chamber is essential to secure the after-wash, and hence that any claim which did not contain the mechanism for securing an "after-wash" was for something more or other than Boyle had actually invented. Claims 1 and 2 of the reissued patent do not include these elements, and hence were held to be invalid.

That the learned judge of the circuit court bestowed considerable time upon the study of this case is evident from his opinion. It is therefore the more remarkable that he should have so misapprehended the nature of the patented invention in the face of these prominent facts, namely: (1) that claim 1 of the original patent (for which claims 1 and

hands of inexperienced persons to prepare such specifications and claims, it is no matter of surprise that the latter frequently fail to describe with requisite certainty the exact invention of the patentee, and err either in claiming that which the patentee had not in fact invented or in omitting some element which was a valuable or essential part of his actual invention. Under such circumstances it would be manifestly unjust to deny him the benefit of a reissue to secure to him his actual invention, provided it is evident that there has been a mistake and he has been guilty of no want of reasonable diligence in discovering it, and no third persons have in the meantime acquired the right to manufacture or sell what he had failed to claim. The object of the patent law is to secure to inventors a monopoly of what they have actually invented or discovered, and it ought not to be defeated by a too strict and technical adherence to the letter of the statute or by the application of artificial rules of interpretation."

2 of the reissue were substituted) had nothing whatever to do with the "after-wash" and made no mention of the elements absolutely necessary to that operation; (2) that the "after-wash" mechanism could not possibly have constituted the patented invention or an essential part thereof, since that part of the apparatus was not new at that time, being in substance the same as the "after-wash" devices of Boyle's prior patent, No. 255,485, and (3) that in the specification of both the original and the reissued patent in suit Boyle particularly pointed out that the means for securing the after-wash "is practically the same as that set forth in my said patent No. 255,485," and that the particular means employed for this purpose was *not* essential.

It would seem as if unusual care had been taken in framing the original patent to guard against this particular error. Of course, starting with the assumption that a device which was old at the time and which was expressly declared to be non-essential is the salient and conspicuous feature of the invention, it is quite natural that the court held the claims of the reissue to be for a different invention from that of the original patent; but this assumption would with equal certainty have destroyed claims 1, 2, 5, and 6 of the original patent, which are for combinations wholly apart from the after-wash provisions.

And we are the more at a loss to account for this misapprehension on the part of the court below because it is only when the injector *ceases to act as an injector* that the after-wash occurs. This "after-wash" is simply a supply of water which is allowed to flow into and partly fill the bowl and to remain there until the closet is again used, so that the excreta may be received into a body of water instead of fall-

ing upon the wall of the bowl.[29] Obviously until the siphoning action, in which the injector is the important factor, has been arrested no water can remain in the bowl.

Beyond all doubt, then, the court below was greatly in error in adjudging that the "after-wash" mechanism constituted an essential feature of the invention, and that the claims sued on were void because this mechanism was not made an element thereof.

The court below was equally in error in assuming that the operation of the after-wash provisions of the patent in suit is dependent upon the tank having two chambers—that is, upon a tank having a separate flushing chamber. It will be noted that the entire argument of the court below, from which the invalidity of the reissue was deduced, was based upon this assumption: that a two-chambered reservoir was necessary and essential to some portion of Boyle's invention. The court below clearly saw and stated that "it was obvious to them [Boyle and Fraser], *as it is to any one*, that the injector would perform its function as well with a single water tank as with a tank and flushing chamber combined." If this were true it would follow that claim 1 of the original patent contained an unnecessary and unmeaning element for the purposes of the combination therein set forth, but the court below was here endeavoring to show that there could have been no *mistake* on the part of Boyle and his solicitor in thus wording the claim. This is not consistent with the finding of the court that a double-chambered tank was an essential element of Boyle's invention. In laying the foundation, on the one hand, for the conclusion

---

NOTE 29.—The purpose of the afterwash is fully stated in the evidence. See *Record*, pages 39, 41, 49, 50, 232, 233.

that claims 1 and 2 of the reissue were invalid, the court held, as a matter of fact, that these claims covered more than Boyle's real invention by omitting an essential element thereof. In laying the foundation, on the other hand, for the conclusion that no inadvertence, accident, or mistake occurred, the court held that the injector would perform its function as well with a simple tank as with a combined tank and flushing chamber, and, furthermore, that Boyle and Fraser were well aware of this, and hence intentionally and designedly drew a claim restricted to a wholly unnecessary device.

This latter assumption contradicts all the evidence touching this point,[30] as well as that other assumption of the court which we are now discussing, namely, that an after-wash is essential to Boyle's invention and that a two-chambered tank is essential to the after-wash.

The latter member of this assumption is contradicted by the language of the original patent, which, referring to Fig. 6, says: "No provision for securing an after-wash is here shown, but the bowl may be refilled after the flushing by any suitable means, as by water admitted by a valve through an independent flushing pipe." Boyle here referred to means well known in the art for producing an after-wash, such means being shown for example in the Peters and Donald patent. Such after-wash provisions, consisting of an independent flushing or "bleeder"-pipe supplied automatically with water by the float-valve supplying the tank, is obviously wholly independent of the construction of the

NOTE 30.—The evidence as to how the mistake arose in wording the claims of the original patent will be found in the *Record*, at pages 64 to 69, Q. 18 to 25; page 111, Q. 338, 339; pages 128 to 130, Q. 569 to 602; pages 263 to 266, Exhibits Bx and Cx.

tank and can be applied to a single as well as to a double tank.

Nor has a two-chambered tank any bearing upon the operativeness of the particular after-wash provisions set forth at length and illustrated in the original patent. This fact will become perfectly clear upon considering the operation of the apparatus shown in Fig. 5 of the original. This figure illustrates a type of closet similar to that shown in Boyle's prior patent, No. 255,485, where the action is wholly automatic. When a person sits on a closet seat, by suitable connections (such as are well known in the art) the lower valve *j* moves down, closing the outlet from the lower chamber F to the flushing pipe *l*, and simultaneously the upper valve *h* is opened. Hence while the closet is being used water flows from the upper chamber and fills the lower chamber F. When the person using the closet rises from the seat the action of the two valves is reversed, valve *h* closing and valve *j* opening. The water in lower chamber F then flows down through the flushing-pipe *l*, and the flushing, siphoning, and discharging action of the closet commences. Now, it is evident that during this operation of the flushing apparatus only the one chamber F takes part in the operation, since the upper chamber is cut off from the lower chamber, and so far as the flushing operation is concerned there is only a single-chambered tank employed. While the water flows down from the upper part of the chamber F, the air is sucked through the injector and the siphoning action continues; but when the water level falls below the level of the mouth of the bell *n* the siphoning action ceases and the water in the chamber F below that level flows out and furnishes the after-wash. It is, we be-

lieve, perfectly clear that the after-wash in this figure 5 is in nowise affected by the presence of the upper compartment of the tank, and that the operation would be the same in whatever manner the chamber F might be filled, whether by the upper chamber directly by a float-valve or by filling it by hand from a bucket. That this may be the more readily understood, we show on the opposite page an illustrative drawing in which the tank is the same as in figure 5 of the original patent drawings, except that the two chambers are merged into one by removing the partition between them, the upper valve being also omitted. The illustrative drawing on the opposite page is lettered to correspond with the patent, and it is evident that the after-wash is secured in exactly the same manner and equally as well as in the construction shown in Fig. 5 of the patent.

We deem it therefore clear beyond all dispute that after-wash devices were not an essential part of the Boyle invention, and not essential to his closet or in fact to any closet, and if they were that a double-chambered tank is not essential to produce an after-wash according to the plan described in the Boyle patent. In fact, a double-chambered tank is shown there simply because of well-known advantages which are in nowise connected with the operation of Boyle's invention.[b]

The only foundation which the court below had upon which to build its conclusion that two chambers were necessary to the after-wash was a statement of Fraser (Boyle's solicitor), which was quoted by the court in its opinion, and which is as follows:

NOTE *b*.—See *Record*, pages 42 and 63.

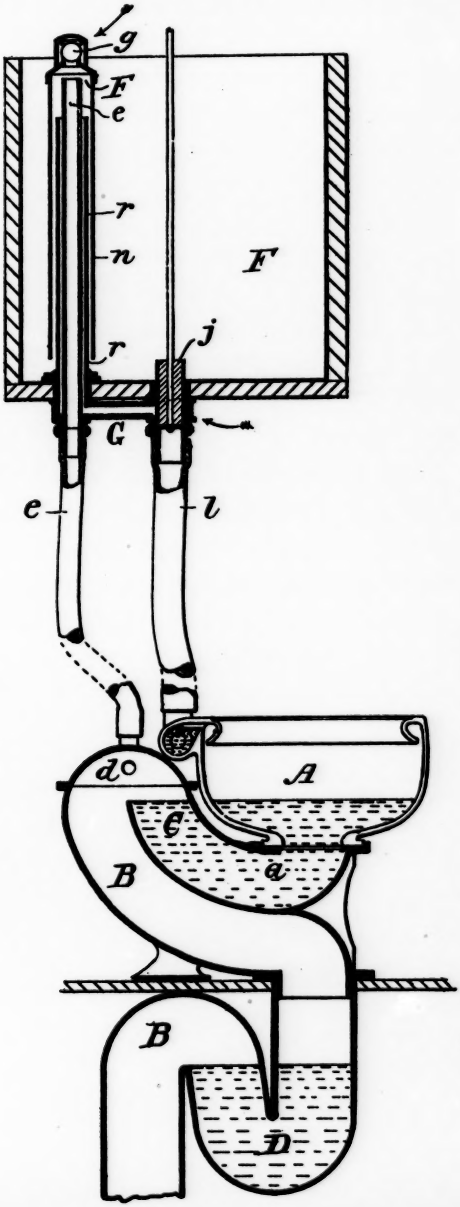
g
F
e
r
n
F
r
j
G
e
l
d
A
c
a
B
B
D

> "Deponent clearly understood that the invention in question introduced a new principle in water-closet flushing apparatus—that of exhausting the air by means of an injecter—and so described the invention in the specification; but that in drawing the claims he inadvertently incorporated the flushing chamber as an element therein, being at the time under the impression that the said flushing chamber was essential to the operation of the invention, whereas, in fact, the said chamber is essential only to the operativeness of the devices for producing the after-wash for refilling the bowl, which devices are claimed specifically in claim 4 of said patent."

If by this sentence Mr. Fraser meant to imply that the presence of a flushing chamber as a distinct chamber of the tank was essential to the operativeness of the devices *shown* in the patent for producing the after-wash, Mr. Fraser was in error, as clearly appears from what has already been said;[31] and this statement made by Mr. Fraser when applying for the reissue is simply another illustration of what was well said by this Court in *Topliff* vs. *Topliff*, 145 U. S., 156—that is:

> "The specification and claims of a patent, particularly if the invention be at all complicated, constitute one of the most difficult legal instruments to draw with accuracy, and in view of the fact that valuable inventions are often placed in the hands of inexpe-

---

NOTE 31.—Exactly what Mr. Fraser meant by his language quoted by the court below is not clear. It is true that if a tank is employed capable of holding enough water for several flushes (of which tanks there are a number of types), then it is essential, in order to employ the particular afterwash appliances shown in Fig. 1 of the reissue, to use a two-chambered tank and to place the afterwash appliances in the lower chamber; and this is probably all that Mr. Fraser meant. That a two-chambered tank is always necessary in order to secure an afterwash Mr. Fraser could hardly have meant, in view of his statement in the original patent as to what might be employed with Fig. 6.

> rienced persons to prepare such specifications and claims, it is no matter of surprise that the latter frequently fail to describe with requisite certainty the exact invention of the patentee and err either in claiming that which the patentee had not in fact invented or in omitting some element which was a valuable or essential part of his actual invention."

Mr. Fraser made the mistake in preparing the original application in assuming that a two-chambered tank was essential to the operativeness of the siphoning mechanism, and in preparing the reissue application he apparently made the mistake (if the learned circuit judge has rightly construed his testimony) of assuming that such a tank was essential to the operativeness of the particular after-wash devices illustrated in the patent. That such tank is advantageous when used in that connection, and therefore desirable, very clearly appears; but to say that it is *essential* to the operation of those devices is asserting more than the facts will sustain.

We might, however, safely concede, for the sake of the argument, that Mr. Fraser was entirely correct in supposing that a two-chambered tank was necessary to secure an after-wash. The correctness or incorrectness of that supposition in nowise affects the vital error of the court below, which consisted in the finding that after-wash mechanism was an indispensable element of Boyle's invention.

EXPANSION OF THE CLAIMS.

3, 4. That the court below erred in holding the purpose and effect of the reissue to be "merely to expand the claims" sufficiently appears from what has already been said. Whether the true legal scope of the claim has been

broadened is, to say the least, questionable. The change effected by the reissue was to make definite and clear that which was indefinite and uncertain and to bring the claim into harmony with the statement of invention.[32]

We have shown that in the mistaken view of the solicitor the flushing chamber was essential to the operation of the injector, and that, acting under this misapprehension, he coupled together in the claims devices whose separate functions are in nowise related. If, therefore, we assume, as the court below assumed, that original claim 1 was strictly limited in scope to the use of an injector only when the closet was also provided with a flushing chamber, we have a claim that is not merely defective because it contains an unmeaning element, but one that is absolutely invalid because drawn to a mere aggregation of unrelated elements, and not to a true combination of coacting parts. Therefore, upon the assumption of the court, the effect of the reissue was not "merely to expand the claim" or "to slough off one element of the combination," but to cure a fatal defect.

The flushing chamber of the tank, as a distinct element, has absolutely no modifying effect whatever upon the siphoning and discharging function performed conjointly by the two traps, the intermediate air space, the suction pipe, the injector, and the flushing water.

NOTE 32.—We have referred (and shall refer) in our argument only to the changes made in the claims. As shown by the italicized and bracketed specifications of the original and reissue, as given above (pages 53 to 59), the changes introduced by the reissue into the description are few and immaterial. The only changes worth mentioning consist in a fuller description of the operation of the closet shown in Fig. 6 and a reference to the Peters and Donald patent as illustrating the independent flushing pipe referred to in the original patent. These changes render the description more clear and precise, and are entirely proper under the principles stated in *Eames* vs. *Andrews*, 122 U. S., 40.

The strict legal definition of a valid combination is a group of elements coacting to accomplish a common object wherein each element modifies the action of every other element.[33]

Under this rule claim 1 of the original patent (if limited to a combination in which the flushing chamber is a distinct element) would appear, when critically examined, to be not a valid combination claim; for if the flushing chamber be taken as a distinct element from the tank or water supply of which it forms a part, and as a measurer of the water supplied, it is evident that as such it does not in any way whatever modify the action of the injector. This is only another statement of the fact now proved in the record of this case, *viz.*, that the injector performs its function in the combination with the suction pipe, flushing pipe, and double-trapped bowl in precisely the same way when connected with a simple tank as when connected with a two-chambered tank. Assuming, then, that claim 1 was open only to that construction which made the tank and flushing chamber of necessity distinct elements and the flushing chamber strictly a measurer of the amount of flushing water delivered, it would follow that this claim would be invalid as a combination claim, and a reissue to eliminate the non-coöperating element would be unquestionably a proper remedy at the time application was made therefor.

INADVERTENCE, ACCIDENT, AND MISTAKE.

5, 6. The court below in its opinion sought to show that the two chambers of the flushing tank were necessary to

NOTE 33.—See *Hailes* vs. *Van Wormer*, 20 Wallace, 372, and *Reckendorfer* vs. *Faber*, 92 U. S., 347.

secure an after-wash in order to lay a foundation for the conclusion that therefore the wording of claim 1 of the original patent was intentional and in pursuance of a well-defined purpose, and hence that there could have been no inadvertence, accident, or mistake. The court below was here clearly in error. The Commissioner of Patents had, in pursuance of the authority vested in him by the statute, decided that there had been an inadvertence, accident, or mistake in the wording of the claims of the original patent, and had accordingly granted the reissue. Not only had the Commissioner decided this question, but (as the record of this suit shows) he did so with all the material facts before him. The Commissioner had before him the affidavits of Fraser and Boyle, and the respective rights of Boyle and Hanson had been fully considered in the interference determined by the Patent Office in Boyle's favor. As the court below said in its opinion:

> "All of the evidence that was before the Commissioner tending to show inadvertence or mistake (such as the affidavit of the inventor and his solicitor and other documents) was offered by the complainants in the present case and was supplemented by some additional testimony.
>
> "Under such circumstances, I understand the law to be that the court may review the finding of the Commissioner on the point that the original patent was inoperative by reason of inadvertence and mistake at least to the extent of determining whether, as a matter of law, what was described and alleged to be a mistake is such a mistake as will warrant a reissue."

The court below simply differed with the Commissioner of Patents on a question of fact, but as the statute has made the judgment of the Commissioner of Patents final upon this question, the court below clearly erred in undertaking to

consider the question at all. That this is the law was authoritatively settled by this Court in *Topliff* vs. *Topliff*, 145 U. S., 156, where the Court say:

> "From this summary of the authorities it may be regarded as the settled rule of this Court that the power to reissue may be exercised when the patent is inoperative by reason of the fact that the specification as originally drawn was defective or insufficient or the claims were narrower than the actual invention of the patentee, provided the error has arisen from inadvertence or mistake and the patentee is guilty of no fraud or deception, but that such reissues are subject to the following qualifications:
>
> * * * * * *
>
> "Third. That this Court will not review the decision of the Commissioner upon the question of inadvertence, accident, or mistake unless the matter is manifest from the record."

In the present case it is certainly clear that the Commissioner did not grant the reissue without evidence of a mistake and without being satisfied that there was a mistake committed, and there is and has been no pretense that any fraud was practiced upon the Commissioner, and it is equally clear that it is not manifest from the record that there was no mistake. That an error was committed the court below admitted, saying:

> "Although the original patent was inoperative to protect a particular combination not claimed therein to which the inventor now conceives himself to be entitled, yet the failure to claim it was not due to any such inadvertence or mistake as will now entitle him to claim it, the inevitable result being to expand the old claims."

But the court insisted that the error was due to Mr. Fraser intentionally drawing the claims as he did under the belief

that the elements introduced were essential to the production of an after-wash. We have, however, shown that whether or not a two-chambered tank be an essential part of the after-wash devices is an immaterial consideration. The mistake proved in this case with respect to claim 1 of the original patent is that Mr. Fraser supposed originally that the two-chambered tank was essential in connection with the function of the injector and the parts co-operating to produce the flushing operation.[34] He never made the mistake, which lies at the foundation of the decision below, of supposing that after-wash mechanism was a necessary part of Boyle's invention. But the court below insists that there could not possibly have been such a mistake as that which Mr. Fraser acknowledges, namely, that the proper operation of the flushing apparatus requires a two-chambered tank.

The court apparently deems the contrary to be so "obvious" to him or to any one as properly to be accepted as a fact despite all evidence. The error of the court in this regard cannot, perhaps, be more clearly shown than by the fact that the learned judge substantially bases his decision upon the very mistake which he says it would have been impossible to make. For, after seeking all the light which the record of this case throws on the subject (which, unfortunately, Mr. Fraser did not have when writing the original claims), the court below holds that a *two-chambered tank* is essential to an *after-wash*, and an *after-wash* essential to *Boyle's invention.*

The truth of the matter is that Mr. Fraser in wording the

NOTE 34.—The evidence touching the mistake will be found in the *Record*, at pages 64 to 69, Q. 18 to 25; page 111, Q. 338, 339; pages 128 to 130, Q. 569 to 602; pages 263 to 266, Exhibits Bx and Cx.

claims of the original patent simply blundered, and it was exactly for the purpose of correcting such blunders that the reissue section was inserted in the statute. The mistake made by Mr. Fraser has been frankly and clearly explained by him and is the more pardonable in him when we consider the fact, as shown by the evidence, that in March, 1883, when Mr. Fraser prepared the original application, he was but 24 years of age.

Nor can Boyle himself be charged with gross carelessness and oversight in not seeing that an error had been committed in the wording of his original claims. That Boyle submitted his best mechanism to his solicitor and carefully impressed upon him the thing he regarded as new and wished to cover is proved, not only by the evidence, but by the original specification itself. Boyle was an excellent plumber and an ingenious mechanic, but he had a common-school education only and was unable to understand by himself the scope and meaning of patent claims, and when he placed his invention in the hands of an attorney in whose skill he had confidence his responsibility in the matter ceased.

If, therefore, it were competent to discuss here the fact of the commission of an inadvertence, accident, or mistake, we submit that the mistake is amply and satisfactorily proven.

SCOPE OF THE REISSUED CLAIMS.

7. That the court below erred in holding and deciding that "the claims in the reissued letters, or some of them, at least, are now so broad as to practically cover the injector as a thing susceptible of being separately claimed" is, we believe, clearly manifest from a reading of the claims them-

selves. It is certain that claims 1 and 2 of the reissue (which are alone involved in this litigation) are by far the broadest claims of the reissue. Claim 1 certainly does not attempt to claim an injector *per se*. On the contrary, the injector is but one element in a combination of the following seven elements:

1. A bowl.
2. A soil passage.
3, 4. Two successive traps in said passage.
5. A flushing pipe.
6. An air pipe.
7. A suction injector.

The injector is hence but one of seven elements, and not only is this so, but it occupies a specific relation to the other six elements, which is stated in the claim in clear and unmistakable language.

And in claim 2 of the reissue the injector is but one element of five in a combination to form a flushing apparatus for a water-closet, as follows:

1. A reservoir tank.
2. A flushing pipe.
3. A flushing valve.
4. An air pipe.
5. A suction injector.

This claim, it will be noted, covers the flushing apparatus only, since it is possible to make and sell the flushing apparatus separately from the closet bowls, but, since the entire patent is directed to water-closets alone and since the invention is stated to introduce a new principle for operating double-trapped or siphon water-closets, the double-trapped water-closet is to be read into the claim by neces-

sary legal implication, in accordance with well-recognized principles.

ABANDONMENT.

8. The conclusion of the court below that "the failure to claim such combination [*i. e.*, the combination of claims 1 and 2 of the reissue] originally, even if it was one that ought to have been allowed if claimed, occurred under such circumstances and was accompanied with such full knowledge of all material facts as amounted to an abandonment of that particular combination to the public" is, we believe, unsound in law and with no foundation in the evidence.

The principal circumstances and facts to which the learned judge here refers as tending to indicate abandonment have already been considered, and the assumption that Mr. Fraser, "with full knowledge of all the material facts," deliberately and designedly abandoned his client's main invention is shown to be not only a violent assumption, but directly contrary to all the evidence.

If we did not have the testimony of Fraser and Boyle and the evidence of what they did immediately upon the discovery of the mistake to correct it, the suggestion of a deliberate intention to abandon the thing they had taken such pains to define is so opposed to all the laws that govern human conduct as to shock the reason. Claim 1 of the original patent immediately and directly follows the two paragraphs of the specification that state the principle of the invention. They may almost be considered a part of the claim, and the only inference as to "intent" we can possibly draw is that Fraser intended by claim 1 to cover the principle which he had just defined.

The only additional circumstance on which was based the allegation of abandonment before the original application was made was the single fact that while Boyle's first experimental tank was a single-charge tank he did not describe it to his solicitor when his original application was in preparation. In other words, the court below holds that, because Boyle obeyed the law (section 4888)[35] and disclosed in his patent the best mode he had devised to embody the principle of his invention and did not perform a work of supererogation by disclosing an inferior modification (which the court below concedes is an *obvious* one), therefore the broad invention common to both has been abandoned. It requires no argument to show the unsoundness of such a ruling. Boyle's sole fault is that he did not at once rush to the Patent Office with his invention in its original crude state, but waited until he had refined it and brought it to that degree of perfection which was demanded by the requirements of the trade and of the New York market.[36]

NOTE 35.—Section 4888 reads: "Before any inventor or discoverer shall receive a patent for his invention or discovery he shall * * * file in the Patent Office a written description of the same, * * * and in case of a machine he shall explain the principle thereof and the *best mode* in which he has contemplated applying that principle," etc.

NOTE 36.—The testimony given by Boyle as to why he did not illustrate and describe in his patent and place upon the market the form of experimental tank shown in Exhibit 15 (reproduced opposite page 110 of the *Record*) will be found in the *Record*, at pages 126 to 128, questions 525½ to 568; at pages 130 and 131, questions 603 to 605; at pages 133 and 134, questions 637 to 648. A reading of this *entire* testimony conclusively shows that Boyle (who is a plumber, not a lawyer) regards his inventions from a commercial and not a legal standpoint; that he understands the word "abandonment" in its popular and not its legal significance, and that all that can be justifiably deduced from his evidence is that he discarded the *particular apparatus* shown in Exhibit 15 because it was crudely

Surely it is the policy of the law to encourage the production of complete and ripened inventions and not to force their premature disclosure. Boyle's original invention, as shown in the experimental tank, was contained, *without change*, in the perfected tank. It is there in its entirety, but is surrounded by other desirable features, each performing its own distinct office without affecting or disturbing that of the features constituting the original and broad invention. There hence was no abandonment by Boyle of the broad invention either before or by the grant of his original patent.

The single question remains: Did Boyle, by negligence or otherwise, abandon his right to the broad invention between January 1, 1884, the date of the grant of his original patent, and January 2, 1885, the date of the application for reissue? There was certainly here present no such delay as has proven fatal to so may reissues which have been before this Court since *Miller* vs. *Brass Co.*, 104 U. S., 350. The

---

put together for experimental purposes only, and was not, as *constructed*, a merchantable apparatus.

Boyle said (answer 525½) that "I decided not to use the injector in that *shape*;" that (answer 531) "my reason for making it as I make it now is because I could make it in *one piece*," and that (answer 537) he made several experimental structures "to see the best way of making that trombe." Boyle calls the injector a "trombe" (see answer 321, page 108; answer 520, page 125). In other words, Boyle here means to say that the experimental tank had an experimental injector made up of several pieces, in a crude way (the exhibit drawing shows five pieces of ordinary pipe fittings such as were probably conveniently accessible), while in his perfected closet the injector is cast in a single piece (see Fig. 1 of the reissue drawing). Boyle further testified that he put on the market the tanks shown in his patent because they were better for the New York market, where such tanks were required by the rules of the health board of the State (answers 528, 540, 541, 638); that he never abandoned his experimental tank (answer 644), but that he quit it "for a better one" (answer 646).

delay was but a year and a day, less than the two years suggested by this Court as a reasonable limit, and the only semblance of an adverse right was the grant of a patent to Hanson upon the same invention on November 25, 1884. Until Boyle saw the Hanson patent he had no reason to doubt the sufficiency of his own patent; and when, through the circumstances following his knowledge of the Hanson patent, he was advised of the error in his own patent, he immediately proceeded to the correction of the same. The question arising here is: What bearing has the patent of Hanson upon the question of validity of the Boyle reissue? This Court has always paid great deference to adverse rights that may have accrued after the grant of the original patent and before the reissue. (*Miller* vs. *Brass Co., supra; Coon* vs. *Wilson*, 113 U. S., 268, etc.) Does the court consider the rights which may have accrued *to the defendants*, or does it also take into consideration the possible rights of other persons who acquiesce in the reissue or whose rights as against such reissue have been judicially set aside by a final decree sustaining the reissue?

So far as concerns the appellee, there are no equities to be considered. Some one is entitled, as against it, to a claim covering the injector in combination with a siphon closet. Hanson obtained a patent for that invention, and Boyle obtained a patent claiming the same invention long before the defendant entered upon the manufacture of these closets. It is using an invention that belongs either to Hanson or to Boyle. It does not claim under either, yet with great apparent warmth and indignation defendant's counsel denounce Boyle's reissue as an "attempt to pirate Hanson's invention." (See defendant's brief below, p. 77.) Defend-

ant's counsel all through the testimony wherever opportunity offered to inject this impetuous remark, and in the brief below as well, appear to have worked themselves almost into a state of frenzy in denouncing the base conduct of Boyle towards the innocent Hanson in attempting the destruction of the Hanson patent. This show of indignation on behalf of the absent Hanson will hardly be regarded as genuine when it is remembered that no matter how the suit between Boyle and Hanson might have resulted, it would have left one party with a patent which the defendant would infringe. Therefore we see no occasion for this lavish overflow of sympathy for Hanson, and we are at a loss to perceive how the defendant would be in any better case if Hanson's patent had been sustained instead of Boyle's. Doubtless in that event the outburst of indignation would have been directed against Hanson.

But coming now to the legal effect of the Hanson patent upon the issue *between the parties to this suit*, we will endeavor to present the matter in its proper light. The question of right between Boyle and Hanson was determined (in the only way it could be determined) by an interference proceeding in the Patent Office resulting in a decision in Boyle's favor, and by a suit in equity brought by Boyle under section 4918, Revised Statutes, resulting in a decree by Judge Wallace, after a full contest and vigorous defense, sustaining the Boyle reissue and declaring the Hanson patent invalid. That decree, from which no appeal was taken, closes, we submit, all question as to the validity of Boyle's reissue arising out of what Hanson had done. The facts and circumstances in that case, and upon which the decree was based, are not before this Court, and the decree cannot be called in question

collaterally. The defendant here must depend upon its own equities. Confessedly it has none; and so, with pretended warmth and indignation, it drags in the equities (being particular, however, not to bring in the record and facts) of Hanson, who has submitted his case to the proper court and accepted its decree.

As the record in this case stands, it appears that all Hanson did was to obtain a patent to which he had no right in view of Boyle's prior patent and invention. The issue of Hanson's patent was a mistake of the Patent Office examiner or an oversight, it matters not which. The issue of an invalid patent creates no rights in favor of the person to whom it was improperly granted; much less does it confer rights upon or create estoppels in favor of other persons.

No one, Hanson included, ever put the device described in his patent into use. The defendant here makes no such pretense. Certainly no rights accrued to the public by reason of Boyle's failure (if he did so fail) to claim his invention originally as broadly as he might have done, and the ground occupied by this defendant is therefore untenable.

The views here presented are in full accord with all the decisions of this Court wherein adverse intervening rights have entered as an element for consideration. This Court, in *Topliff* vs. *Topliff* (*supra*), in summarizing all its previous decisions, said:

> "In the large number of cases which have come up to this Court since that of *Mahn* vs. *Harwood* was decided, in which reissues have been held to be invalid, it will be found that the opinion of the Court was put upon the ground either that the patentee had been guilty of inexcusable laches, or that circumstances had occurred since the granting of the original patent which made the reissue operate harshly or unjustly *to the defendant in the case.*"

In reference to the validity and propriety of the Boyle reissue, we submit that it is singularly free from those defects which have appeared in so many reissues before this Court. In the present case the error in the original patent is clear; the mistake is plain and easily pardonable; the effect of the reissue was not to expand the invention, but to state correctly the same invention which was misstated in the claim of the original patent; the reissue was promptly applied for and before any adverse rights accrued; the present appellee has no equities whatever, and Boyle, having performed his part of the contract with the public by the disclosure of his invention, is justly entitled to the full protection which the law is intended to give.

And in concluding we cannot refrain from repeating in this case, in which is involved perhaps the last reissue which will be adjudicated by this Court, what this Court, speaking through Chief Justice Marshall, said in rendering their decision upon the first reissued patent which came before them:

> "It cannot be doubted that the settled purpose of the United States has ever been and continues to be to confer on the authors of useful inventions an exclusive right in their inventions for the time mentioned in their patent. It is the reward stipulated for the advantages derived by the public for the exertions of the individual, and is intended as a stimulus to those exertions. The laws which are passed to give effect to this purpose ought, we think, to be construed in the spirit in which they have been made, and to execute the contract fairly on the part of the United States where the full benefit has been actually received, if this can be done without transcending the intention of the statute or countenancing acts which are fraudulent or may prove mischievous. The public yields nothing which it has not agreed to yield. It receives all which it has contracted to

receive. The full benefit of the discovery after its enjoyment by the discoverer for fourteen years is preserved, and for his exclusive enjoyment of it during that time the public faith is pledged. That sense of justice and of right which all feel pleads strongly against depriving the inventor of the compensation thus solemnly promised because he has committed an inadvertence or innocent mistake."

"The communication of the discovery to the public has been made in pursuance of law, with the intent to exercise a privilege which is the consideration paid by the public for the future use of the machine. If, by an innocent mistake, the instrument introduced to secure this privilege fails of its object, the public ought not to avail itself of this mistake and to appropriate the discovery without paying the stipulated consideration. The attempt would be disreputable in an individual and a court of equity might interpose to restrain him."

Grant vs. *Raymond*, 6 Peters, 218.

(*b.*)—PATENTABILITY OF THE BOYLE INVENTION.

The court below did not pass directly upon the patentability of Boyle's invention, though it appears from the whole tenor of the opinion that the court below regarded the invention as one that would have been patentable to Boyle if the proper claim had been made in the original application. Defendant's counsel, however, attacked both the utility and the novelty of Boyle's invention at the hearing below, and, since they may do so here, we venture to present briefly our views in reference to the same.

The contention by the defendant that the Boyle invention is lacking in *utility* requires, we believe, but little consideration. The evidence relates largely to this subject, but we will here refer to only one or two controlling facts. The defendant, while contending that Boyle's construction is less

advantageous than that of Peters and Donald, nevertheless uses the former. This is conclusive—*at least, as against it.* In *Lehnbeuter* vs. *Holthaus*, 105 U. S., 94, this Court say:

> "The patent is *prima facie* evidence both of novelty and utility, and neither of these presumptions has been rebutted by the evidence. On the contrary, they are strengthened. No anticipation of the design is shown, although the attempt has been made to prove anticipation. The fact that it has been infringed by the defendants *is sufficient to establish its utility, at least as against them.*"

This language was quoted with approval by the Court in a recent case, *Gandy* vs. *Main Belting Co.*, 143 U. S., 587, and referred to with approval in *Western Electric Co.* vs. *La Rue*, 139 U. S., 601.

The conduct of complainants is also persuasive, and is ample demonstration of the superiority of the Boyle invention in suit. Appellant Henry Huber is the exclusive owner of the Peters and Donald patent, and is the exclusive licensee under the Boyle reissue and the earlier Boyle vacuum-chamber patent, No. 255,485. His interest is obviously to place on the market the closet most acceptable to the public, and (other things being equal) to prefer the Peters and Donald construction, which is his own, to the Boyle constructions, on which he has to pay a royalty; but up to October 1, 1887, out of the total number of 8,874 closets manufactured by Huber's firm 7,764 were constructed in accordance with the invention of the Boyle reissue and only 1,110 in accordance with the Peters and Donald patent, and even these 1,110 were not constructed just like the Peters and Donald patent, but like the Boyle patent No. 255,485.[37]

NOTE 37.—*Record*, page 137.

The patentable novelty of the Boyle invention is disputed on the strength of the fact that the elements of claims 1 and 2 of the reissued patent—namely, the injector and double-trapped soil pipe, the flushing pipe, and the suction pipe—were all severally old, the injector being shown in numerous exhibits introduced by the defendants, and the other elements being shown in the prior Boyle patent, No. 255,485, and in the Peters and Donald patent. That an injector is, in itself, an old thing required no proof, since it is referred to in the Boyle patent in suit as something well known, the patent saying:

> "In crossing the cavity in the casting it [the flushing water] encounters and carries with it a portion of air, and so creates a partial vacuum in this cavity *in the manner common to injectors.*"[38]

Moreover, the Boyle patent No. 255,485 is mentioned in both the original and the reissue patent, and the Peters and Donald patent is mentioned in the reissue. Hence in granting the patent the Patent Office was apprised of every material fact disclosed by the *Record* of this suit. As against the contention of lack of novelty we would therefore place the decision of the Patent Office, which has three times passed favorably upon this question—first, in granting Boyle's original patent; second, in granting Hanson's patent, and, third, in granting the Boyle reissue.[39] This, therefore, is pre-emi-

---

NOTE 38.—*Exhibits*, pages 10, 21.

NOTE 39.—The principal claims of the Boyle reissue were allowed by the examiners-in-chief on appeal, who, in their decision (*Record*, page 271), said:

> "Claims 1, 2, 3, and 4 stand rejected upon the patent to Peters & Donald, No. 260,232.
>
> "Claim 1. The patent to Peters & Donald discloses all the elements of this claim except the 'suction injector arranged in connection with said pipe' (the flushing pipe) 'and arranged to be traversed

nently a case in which it may be said that the patent is *prima facie* evidence both of novelty and utility; that neither of these presumptions has been rebutted by the evidence, but that, on the contrary, they are strengthened.

No attempt has been made to show that an injector has ever been used, either in a water-closet or in any other apparatus to rarefy the air between two traps, and so cause a siphoning of the contents of the upper trap into the lower.

The claims are each for a combination of elements, the result of which is due to the conjoint action of all the coöperating parts. The function of an *injector* is merely by the flow of one fluid to set in motion another fluid, and that is only and always its function, separately considered. Nevertheless, as with other devices long known in the arts, many patentable applications of the suction injector have been made, and it is conceivable that many more may be made in the future. The function of the *new combination* is to cause the siphoning of the bowl and the flushing of the closet; and it will be observed that in this combination the flushing water not only performs its usual function of flushing the bowl and soil pipe, but, by the aid of the injector, performs the additional and novel function of sucking out

by the flushing water.' In lieu of this element and device Peters & Donald carry their air pipe directly from the air space between the traps to the top of the flushing chamber, thus transferring the air from one space to the other by displacement. Boyle regards his plan as vastly superior to the former method, and it is one of the prime features of his invention. Whether superior or not, it certainly differs from that of the Peters & Donald patent, both in principle of operation and in substantial mechanism, and the said novelty, joined with the obvious utility or operativeness, entitle applicant to a patent on the combination set forth.

"Claims 2, 3, and 4 contain the same feature of departure from the reference cited, namely, the suction injector arranged in connection with the flushing pipe, and are admissible for the same reasons."

the air from between the two traps and starting the siphoning action. This function is not comparable or analogous to that of any of the injectors shown in evidence as having existed prior to Boyle's invention, whence it proceeds that the injector has been promoted to a new sphere of action where, in connection with the double-trapped pipe and the flushing water, it performs a wholly new function.

In *Western Electric Co.* vs. *La Rue*, 139 U. S., 601, this Court say:

> "Indeed there is nothing in any of these exhibits which shows the use of a torsional spring in a telegraphic instrument, and while the invention does not seem to be one of great importance we think the adaptation of this somewhat unfamiliar spring to this new use, and its consequent simplification of mechanism, justly entitle the patentee to the rights of an *inventor*."
>
> "While the promotion of an old device, such, for instance, as a torsional spring, to a new sphere of action, in which it performs a new function, involves invention, the transfer or adaptation of the same device to a *similar* sphere of action, where it performs substantially the same function, does not involve invention."

The defendant contends, however, that an injector as a means of rarefying air is the mere mechanical equivalent of the vacuum chamber and its accessories in the Peters and Donald patent, and all, therefore, which Boyle has done is simply to substitute in an old combination one old device for a mechanically equivalent device.

It is clear at the outset that the injector of the Boyle patent cannot be combined with the other essential features of the closet by simply removing the vacuum chamber and its accessories of the Peters and Donald patent and replacing them by the injector. Contrivance, ingenuity, and study

were obviously required to place the injector in the combination in which we find it.

Nor do the injector and the vacuum chamber act in substantially the same manner. The creation of a vacuum by the vacuum-chamber principle depends upon the relative capacities of the vacuum chamber and the confined-air space and the level of the water in the vacuum chamber above the outlet of the flushing pipe, while with the injector the creation of the vacuum depends upon the capacity of the confined-air space, the velocity of the water flowing through the injector, and the duration of the flow.

The testimony fully explains the different principles and laws governing the action of "injectors" such as Boyle uses, and "vacuum chambers" such as Peters and Donald use; it shows that the two devices are not interchangeable, in some cases one being wholly inapplicable and in other cases the other being equally inapplicable; and it is further shown that the actions of the two devices are so distinct and different that in the absence of experiment it could rarely be stated in advance whether one would fulfill the purpose of the other.[40]

The general knowledge existing at the date of Boyle's invention as to "injectors" and "aspirators" was insufficient to show that an injector could be substituted for a vacuum chamber for operating a siphon water-closet. In all prior cases where a mechanism was used for exhausting air similar in construction to the injector mechanism employed by Boyle, the conditions had existed of abundant

NOTE 40.—The evidence upon the propositions here stated is that of Prof. Henry Morton, president of the Stevens Institute of Technology, and will be found in the *Record*, in answer to Q. 146, pages 168, 169; Q. 161, 162, pages 174, 175; Q. 172, pages 177, 178, and Q. 191, pages 180, 181.

water and no limit of time for the operation to be finished. These conditions do not exist in the case of a water-closet. In a water-closet the supply of water is limited, only a few gallons being available (the amount being usually regulated by municipal ordinances), and the time during which the injector can act is limited to the few seconds required for these few gallons of water to fall through an ordinary flushing pipe. The determination as to whether or not the injector would act properly under these necessary conditions was in nowise assisted by the knowledge of the Peters and Donald closet, since the operation of the vacuum chamber in that closet depends upon entirely different laws. The two devices act under different laws and are dependent upon different conditions, and one cannot be substituted for the other with any assurance of success without experiment. The two devices do not operate in substantially the same way, which is absolutely essential to constitute them mechanical equivalents of each other.

Nor is the injector as used by Boyle the mechanical equivalent of the vacuum chamber as used by Peters and Donald in producing the same result. It is true that the Boyle flushing apparatus and that of Peters and Donald produce the same result in that both cause the siphoning of the bowl, but in addition to this the Boyle apparatus produces other effects and results than those produced by the Peters and Donald apparatus. The additional capabilities and results produced by the injector tank and the merits and advantages which follow therefrom are fully and clearly stated in the evidence, and these added and superior results necessarily imply that the injector is something more than the mere mechanical equivalent of the vacuum chamber. To be mechanical equivalents two devices must not only

have the same substantial mode of operation, but must produce substantially the same result, and by substantially the same result is necessarily meant, when a question of patentabilily is involved, that the results are identical except, perhaps, in degree. If new results or better results are accomplshed by one device which are not accomplished by the other device, then the two devices are not mechanical equivalents of each other, and in the present case the fact that the injector apparatus produces better results than the vacuum chamber apparatus is evidenced in the most convincing manner by the act of the defendant in using an injector apparatus instead of a vacuum-chamber apparatus.

It is therefore evident that the injector of the apparatus invented by Boyle is not the mere mechanical equivalent of the vacuum chamber of the apparatus invented by Peters and Donald, since the two apparatus do not act in substantially the same way, do not produce substantially the same results, and involve principles of operation which are not interchangeable in the mechanical arts.[41]

NOTE 41.—"These abstract phrases, '*substantial* identity,' 'equivalent,' 'mode of operation,' etc., are often used in such a vague and equivocal manner that they mystify and lead many to absurd conclusions who will not distinguish between things that differ. That two machines produce the same effect will not justify the assertion that they are substantially the same, or that the devices used by one are therefore mere equivalents for those of the other.

"The argument used to show infringement assumes that every combination of devices in a machine which is used to produce the same effect is necessarily an equivalent for any other combination used for the same purpose. This is flagrant abuse of the term 'equivalent.' *Without attempting* to define this abstract term by other abstract terms, we may give examples which will best show its application to machines, as where a simple lever is used in one and the other substitutes a cam or toggle joint or a wedge for a cam, and many other instances where one mechanical power is substituted for another in a machine."

Burr vs. *Duryee*, 1 Wallace, 573.

It is also, we believe, pertinent in this connection to call attention to the fact that while the Peters and Donald British patent was known to the world in 1874, the Boyle invention was not published until ten years later—in 1884. That ten years were required to produce the Boyle invention certainly tends strongly to support the assertion that it required invention to produce it.

The court below did not question the patentability of Boyle's invention, and it is, we believe, clear.

VIII.

THE DEFENDANT'S INFRINGEMENT.

The infringement of the patents in suit by the defendant was not passed upon by the court below. Defendant, however, in its answer denied the infringement. Complainants introduced proof tending to establish the infringement of both patents, and no countervailing testimony was presented on behalf of the defendant. We hence believe that but little need be said in this regard.

Defendant's infringing closet is shown in Complainants' Exhibit No. 10 (see page 54, *Record*), and in the White patent, No. 363,566 (*exhibits*, p. 33)

Infringement is claimed only upon claims 1, 2, and 3 of the Peters and Donald patent and upon claims 1 and 2 of the Boyle reissue.[42]

Peters and Donald, being the pioneers of the type of pneumatic closets, were entitled to obtain broad claims and are entitled to a liberal construction of the same. They were

NOTE 42.—Bill of complaint, paragraph 13, *Record*, page 5, and pages 56 to 58, *Record*.

the first to produce a closet having two successive traps in the outlet passage from the bowl, and claim 1 is directed to this feature, as follows:

> 1. A water-closet consisting of a bowl, a fixed trap-bend in the passage leading therefrom whereby a portion of water is retained in the bowl, a second trap in the discharge-passage leading from the first whereby an air-space is formed between the two traps, and an orifice communicating with said air-space and adapted for the attachment of an air-pipe, all combined and arranged in substance as described.

That defendant's closet contains all of these features requires no argument.

Claim 2 covers the same elements as claim 1, plus *some* (*i. e*, *any*) means for rarefying the air in the space between the two traps when the closet is flushed, and is as follows:

> 2. A water-closet consisting of a bowl, a fixed trap-bend in the soil-passage leading therefrom, whereby a portion of water is retained in the bowl, and a second trap in said soil-passage below the first, whereby an air space is formed between the two traps, in combination with means for rarefying the air in said space upon the flushing of the closet, substantially as set forth and for the purposes described.

It is equally clear that the defendant's closet has all of these features.

Claim 3 covers the same elements as claim 2, *plus* a flushing valve, means for operating it, and the limitation that the means for rarefying the air is set in operation by the act of opening the flushing valve, and is as follows:

> 3. A water-closet consisting of a bowl, a trap leading therefrom, a second trap in the discharge passage leading from the first, and an air space between the two traps, in combination with a flushing-valve and

means for operating the same to flush the closet, and means for drawing air from the space between the two traps, constructed to be set in operation by the act of opening said flushing-valve, substantially as set forth.

It is obvious that this claim can be read literally against defendant's closet.

Defendant's closet is hence such a clear embodiment of the Peters and Donald invention as claimed that it is wholly unnecessary to consider whether the injector which they employ is or is not the equivalent of the vacuum chamber of Peters and Donald, since the terms of the Peters and Donald claims are such as to make it unnecessary to invoke the doctrine of equivalents in their aid.

The exact appropriation by defendant of the subject-matter of claims 1 and 2 of the Boyle reissue is so obvious and clear as to the require no comment.

We accordingly submit that the decree below should be reversed and the cause remanded, with directions to enter a decree for the complainants, and to proceed therein in accordance with the usual course of equity.

ARTHUR S. BROWNE,
ANTHONY POLLOK,
PHILIP MAURO,
PAUL BAKEWELL,
Of Counsel for Appellants.

WASHINGTON, D. C., *December* 12, 1892.

INDEX.

Page

GENERAL STATEMENT 1
The patents in suit are the Peters and Donald patent No. 260,232 and the Boyle reissue No. 10826 1
The Peters and Donald patent was declared void by the court below because of the forfeiture of a prior British patent 2
The Boyle reissue was declared void because held to be illegally expanded 2

THE PETERS AND DONALD PATENT.

STATEMENT 3
Peters and Donald obtained a fourteen-year British patent, dated April 7, 1874, No. 1207 4
Peters and Donald sold their rights in the United States to appellant Boyle October 27, 1881 4
Application for United States patent was filed November 29, 1881. 4
Patent in suit was granted June 27, 1882 4
The tax of 100 pounds on the British patent, due April 7, 1881, was not paid, whereby the patent was forfeited 5
No evidence showing by whose default the British patent was thus forfeited 5
ERRORS IN THE OPINION OF THE COURT BELOW 5
The court below based its adverse decision upon its interpretation of *Bate Refrigerating Co.* vs. *Hammond* 5
The court below held that the duration of the later United States patent is contingent upon that of the prior foreign patent and is subject to contingencies affecting the life of the foreign patent 7
The court below held that the forfeiture of a prior foreign patent destroyed the force thereof, and that any subsequently granted United States patent was void *ab initio* 8
The court below held that there was no authority in law for the grant of the patent in suit, and that it was void *ab initio* 8
The court erred in considering the forfeiture of the prior British patent as a material circumstance in determining the validity of the patent in suit 9

	Page
BRIEF OF THE ARGUMENT	10
(*a*) ITS TERM	10
The construction of section 4887, Revised Statutes, is here involved	10
The decision herein of the court below has been practically overruled by the decision of this Court in *Pohl* vs. *Anchor Brewing Co.*	10
The circuit court in deciding the *Pohl* case followed the decision of the court below in the case at bar	11
The court below misinterpreted the decision of this Court in the *Bate* case	12
This Court in the *Pohl* case criticised the decision of the court below in the case at bar	12
This Court in the *Pohl* case decided that the United States patent is not affected by the forfeiture of the prior foreign patent	13
The term of the foreign patent alone controls	13
The present case distinguished from the *Pohl* case, in that the forfeiture of the foreign patent occurred before the patent in suit was applied for	15
Had Peters and Donald then a right to apply for and obtain a United States patent?	15
Section 4887, Revised Statutes, recited	16
No statutory bar existed to the grant of the patent in suit	17
What is the term of the patent in suit?	17
(1) Since the prior British patent was not in force at the time of its grant, is it a seventeen-year patent? or	18
(2) Does it expire with the expiration by lapse of time of the term for which the British patent was granted?	18
The first of these questions considered	18
Section 4887, Revised Statutes, is destructive in its effects, is in the nature of a provision for forfeiture, and should be construed beneficially to the patentee where possible	19
The *Pohl* case decided (*a*) that forfeiture of a prior foreign patent cannot shorten the term of the United States patent, and	20
(*b*) That only a prior foreign patent *in force* can affect the duration of the United States patent	21
The *Pohl* case decided that the United States patent must be granted for a fixed and definite term	22
The invention of the patent in suit was never used in the United States prior to the application for patent here	23
Equity demands that inventors should be rewarded, especially where, by means of their patent, a new and valuable invention has been given to the public	24

Page

The introduction of the present invention in the United States was due solely to the United States patent in suit, and not at all to the prior British patent 25
The literal language of the *Pohl* decision warrants the holding that the patent in suit has a seventeen-year term..... 25
The second question considered..... 27
Does the *Pohl* case decide that forfeiture of the prior foreign patent is a wholly immaterial circumstance in considering the duration of the United States patent?..... 28
If so, the only circumstance to be considered is when the term of the foreign patent expires by lapse of time..... 28
This view is consistent with the supposed intent of Congress in enacting section 4887 (Note 11)..... 29
Under this view the term of the patent in suit expired April 7, 1888, simultaneously with the expiration of the term of the prior British patent 30
Résumé of the stated propositions..... 32
The inconveniences resulting from attempting to construe foreign statutes of forfeiture (Note 12) 32
(*b*) ALLEGED ABANDONMENT..... 33
Abandonment urged by defendant but not alluded to by the court below 33
No evidence in the record tending to prove abandonment.. 33
Abandonment requires strict proof..... 34
Supreme Court decisions relating to abandonment considered (Note 13)..... 35
Failure to pay a foreign tax is not abandonment..... 39
Delay in applying for a patent is not abandonment..... 39
No estoppel existed and no adverse claim or use in the United States rendered the grant of the United States patent inequitable 41
The practice of the Patent Office considered (Note 15)..... 42
The statute has prescribed a specific penalty for delay, and no other can be applied 42

THE BOYLE REISSUE PATENT.

STATEMENT 45
The invention is an improvement upon that of the Peters and Donald patent and of an earlier patent of Boyle, No. 255,485.. 45
The invention relates to double-trapped pneumatic closets..... 46
The novel feature of the invention consists in the employment of a suction injector in such a closet..... 46
The principle of the invention was clearly stated in the original of the reissue..... 47

Page

Boyle's invention dates back to October, 1881 47
An experimental apparatus then made embodied the invention with a single charge tank 47
Boyle refined his invention by adding to his original invention other desirable but old features 48
These added features did not affect the combination of the original invention 48
The perfected apparatus included a two-chambered tank, which was an old and well-known water-supply instrumentality 49
Original application was prepared by Fraser and filed March 12, 1883, and original patent No. 291,139 issued January 1, 1884 49
Each claim of the original patent recited the two chambers of the water-supply tank 50
Patent No. 308,358 was granted to Hanson November 25, 1884, covering Boyle's invention 50
Boyle saw this patent in the Official Gazette, consulted his solicitor, Fraser, was advised that his own patent was defective, and to apply for a reissue 50
Reissue application was filed January 2, 1885 51
An interference in the Patent Office with Hanson was decided in Boyle's favor March 7, 1887 51
Reissue was granted April 19, 1887 51
Boyle brought suit against Hanson to annul Hanson's patent (section 4918, Revised Statutes), which resulted in a decree by Judge Wallace, June 6, 1888 51
This decree adjudged that the Boyle reissue was good and valid; that Boyle was the first inventor, and that the Hanson patent was void (Note 23) 51
Defendant's manufacture began in April or May, 1887 52
No adverse right accrued between the grant of the original patent and the application for reissue 53
Descriptions of original and reissue compared 53
Claims of the original and reissue compared 59
Change in the claims made by the reissue 62
Claim 1 of the reissue the most important claim and the one most consistent with the original statement of invention and with the actual invention 62
The particular character of the water supply immaterial 63
ERRORS IN THE OPINION OF THE COURT BELOW 63
Court erred in reference to the essentiality and operation of the "after-wash" 63
Court erred in holding that the reissue was an illegal expansion. 66
Court erred in considering the question of inadvertence, accident, or mistake, and in deciding that there was none 67
Court erred in reference to the scope of the claims in the reissue. 67

Page

Court erred in holding that Boyle had abandoned the subject-matter of claims 1 and 2 of the reissue .. 67

BRIEF OF THE ARGUMENT .. 68

(*a*) CONCERNING THE ERRORS OF THE COURT BELOW .. 68

The question for decision is: Has the Boyle patent been *unlawfully expanded* by reissue? .. 68

The characteristic feature of the invention is the *suction injector* .. 69

The other *essential* features with which the suction injector is combined are all old .. 69

The two-chambered tank of claim 1 of the original patent is merely representative of a water supply, and any other water supply in the combination is an equivalent thereof. 71

Defendant's structure would have infringed claim 1 of the original patent if properly construed .. 72

Reissue did not expand the invention, but simply restated it clearly and without ambiguity .. 72

If an expansion, the reissue is not an unlawful expansion .. 73

It was seasonably applied for, the delay being but a year and a day, and no adverse rights intervened .. 74

The defendant has no equities .. 74

The law in reference to reissues considered—*Topliff* vs. *Topliff* (Note 28) .. 74

The "After-wash" Error .. 75

Original patent states that after-wash provisions constitute no material part of the invention—are old and are not essential .. 76

Assumption of court below that the after-wash is the conspicuous feature of the invention would have been fatal to the original patent .. 76

After-wash acts only when the injector ceases to act .. 76

Court erred in assuming that a two-chambered tank was essential to the operation of the after-wash of the patent .. 77

Two inconsistent assumptions of the court below pointed out. 77

Figure 6 of the original patent shows the court to have been in error as to the necessity of two chambers to the operation of the after-wash .. 78

Figure 5 of the original patent proves the same error .. 79

The court misconstrued Fraser's affidavit in this regard .. 81

If the court correctly construed Fraser's affidavit, another instance of the errors referred to in *Topliff* vs. *Topliff* is given .. 81

Whether Fraser (as construed by the court) was right or wrong is immaterial, since the error of the court below consisted in finding that an after-wash was an essential part of Boyle's invention .. 82

Page

Expansion of the Claims 82

Claim 1 of original patent, strictly construed, is for a mere aggregation, the two chambers of the tank having no co-operative action with the other elements of the claim 83

Reissue was necessary to cure this defect 84

Inadvertence, Accident, and Mistake 84

Court below held that no mistake was made in the wording of claim 1 of the original patent, and that it was designedly limited to a two-chambered tank 85

The Commissioner of Patents, with all the material facts before him, had in pursuance of his lawful authority decided that there was a mistake 85

The court below was in error in attempting to review the decision of the Commissioner in this respect 86

The mistake proven is that Fraser drew claim 1 of the original patent under the mistaken belief that a two-chambered tank was essential to the operation of the injector.. 87

The court below ignored this proven mistake and assumed the existence of two mistakes of its own creation, to wit: (1) that a two-chambered tank was essential to the creation of an after-wash; and (2) that an after-wash was essential to Boyle's invention 87

In drawing the original claims Fraser did not have the light of the record in this case, and innocently blundered through failure to clearly apprehend and state the invention in the claims 87

Boyle himself trusted to his solicitor, in whom he had confidence 88

Scope of the Reissued Claims 88

The claims of the reissue do not claim an injector *per se*, as erroneously held by the court below 88

Claim 1 is limited to a combination of seven coöperating elements, of which the injector is one, and claim 2 to one of five elements 89

Abandonment 90

The position of the court below that Fraser deliberately and intentionally abandoned his client's principal invention is in defiance of all the evidence 90

That Boyle's original one-chambered tank was not described in the patent is no indication of abandonment 91

On the contrary, Boyle obeyed the law in selecting for disdisclosure in his patent his best apparatus 91

Page

Boyle's original invention shown in the experimental tank is contained without change in the patented apparatus, but is there surrounded by other old but desirable features, each performing its own distinct office without disturbing or affecting that of the original apparatus 92

No circumstances occurred on which abandonment can be predicated between the date of the original patent and that of the application for reissue 93

The improvident issue of an undeserved patent to Hanson on the same invention constituted no adverse right..... 93

Hanson's equities, if any there be, can be of no service to the defendant 93

Either Boyle or Hanson is entitled to a patent on the invention as against the defendant 94

The respective rights of Hanson and Boyle have been adjudicated by a decree in which Hanson has acquiesced..... 94

Defendant must depend upon its own equities, and, as it has none, it attempts to drag in those of Hanson, being careful, however, not to produce the record or the facts of the litigation between Boyle and Hanson 95

The Court will only consider circumstances which would operate harshly or unjustly to the defendant (*Topliff* vs. *Topliff*)..... 95

The equities are all on the side of Boyle..... 96

(*b*) Patentability of the Boyle Invention..... 97

The court below apparently conceded its patentability..... 97

The fact that the defendant uses the Boyle invention is conclusive of its utility against it..... 98

That appellants have used the Boyle invention in preference to others equally open to them is persuasive of its utility. 98

Patentable novelty is shown by the circumstance that the Patent Office, with all material facts before it, has three times decided it affirmatively..... 99

Boyle was the first person not only to use an injector in a water-closet for siphoning the same, but the first to use an injector for *any* siphoning purposes 100

Boyle has promoted the injector to a new sphere of action.. 101

Boyle's injector is not the mechanical equivalent of the vacuum chamber in the Peters and Donald patent 101

Injectors and vacuum chambers do not operate in substantially the same way, do not accomplish substantially the same results, are not interchangeable, involve different principles in their operation, and hence are not mechanical equivalents... 102

Ten years elapsed after the grant of the Peters and Donald patent before that of Boyle appeared..... 105

DEFENDANT'S INFRINGEMENT.

Page

Claims 1, 2, and 3 of the Peters and Donald patent and 1 and 2 of the Boyle reissue are alleged to be infringed ..... 105.

Peters and Donald are the pioneer inventors and entitled to liberal constructions 105

Claims 1, 2, and 3 of the Peters and Donald patent can be read literally against defendant's structure 106

It is not necessary to invoke the doctrine of equivalents in their aid. 107

Defendant's structure is an exact appropriation of claims 1 and 2 of the Boyle reissue 107

DECISIONS CITED.

SUPREME COURT.

Page.

Pennock *vs.* Dialogue, 2 Peters, 1 ..... 36 (note)

Grant *vs.* Raymond, 6 Peters, 218 96

Shaw *vs.* Cooper, 7 Peters, 286 ..... 36 (note)

McClurg *vs.* Kingsland, 1 Howard, 202 ..... 36 (note)

Kendall *vs.* Winsor, 21 Howard, 322 ..... 37 (note)

Burr *vs.* Duryea, 1 Wallace, 573 ..... 104 (note 41)

Agawam *vs.* Jordan, 7 Wallace, 583 ..... 37 (note)

Hailes *vs.* Van Wormer, 20 Wallace, 372 ..... 84 (note 33)

Reckendorfer *vs.* Faber, 92 U. S., 347 ..... 84 (note 33)

Consolidated Co. *vs.* Wright, 94 U. S., 92 ..... 38 (note)

Merrill *vs.* Yeomans, 94 U. S., 568 ..... 71 (note 27)

Cochrane *vs.* Deener, 94 U. S., 780 ..... 70 (note 26)

Machine Co. *vs.* Murphy, 97 U. S., 120 ..... 70 (note 26)

Water Meter Co. *vs.* Desper, 101 U. S., 335 ..... 70 (note 26)

Planing Co. *vs.* Keith, 101 U. S., 479 ..... 38 (note)

Worley *vs.* Tobacco Co., 104 U. S., 340 ..... 38 (note)

Miller *vs.* Brass Co., 104 U. S., 350 ..... 92 *et seq.*

Lehnbeuter *vs.* Holthaus, 105 U. S., 94 98

Coon *vs.* Wilson, 113 U. S., 268 93

Rifle Co. *vs.* Whitney Co., 118 U. S., 22 ..... 38 (note)

Eames *vs.* Andrews, 122 U. S., 40 ..... 83 (note 32)

Andrews *vs.* Hovey, 123 U. S., 267, and 124 U. S., 694 .. 39 (note)

Bate Refrigerating Co. *vs.* Hammond, 129 U. S., 151 .. 6 *et seq.*

Pohl *vs.* Anchor Brewing Co., 134 U. S., 385 ..... 10 *et seq.*

Western Electric Co. *vs.* La Rue, 139 U. S., 601 ..... 98 *et seq.*

Gandy *vs.* Main Belting Co., 143 U. S., 587 98

Topliff *vs.* Topliff, 145 U. S., 156 ..... 74 (note 28) *et seq.*

CIRCUIT COURTS.

	Page
Russell Irwin Co. *vs.* Mallory, 5 Fisher, 541	40
Jones *vs.* Sewall, 6 Fisher, 343	40
McCormick *vs.* Seymour, 2 Blatch., 256	34
Singer *vs.* Braunsdorf, 7 Blatch., 521	34
Andrews *vs.* Carman, 13 Blatch., 307	69 (note 25)
Holmes *vs.* Burglar Alarm Co., 21 Fed. Rep., 468	14
Huber *vs.* Myers, 34 Fed. Rep., 48	3 (note)
Pohl *vs.* Anchor Brewing Co., 39 Fed. Rep., 782	11
Clement Co. *vs.* Upson Co., 40 Fed. Rep., 473	3 (note)
Henry *vs.* Tool Co., 14 O. G., 855	39
Huber *vs.* Nelson, 44 O. G., 234	2 (note 4)
Edison Co. *vs.* U. S. Co., 61 O. G., 564	32 (note 12)
Boyle *vs.* Hanson (*not published*)	51 (note 23)

COMMISSIONER OF PATENTS.

Eades *vs.* Jewsbury, 1 C. D., 90	43 (note)
In re Mushet, 2 C. D., 106	42 (note 15)
In re Ward, 2 C. D., 126	42 (note 15)
In re Boyer, 2 C. D., 130	42 (note 15)
In re Smith, 2 C. D., 131	42 (note 15)
In re Singer, 2 C. D., 146	42 (note 15)
In re Golding, 8 O. G., 141	40

EXAMINERS-IN-CHIEF.

Eades *vs.* Jewsbury, vol. 8, page 32	43 (note)
In re De Meritens, vol. 40, page 191	44 (note)

148 US 270

Office Supreme Court U. S.
FILED.
MAR 2 1893
JAMES H. McKENNEY,
CLERK.

Supreme Court of the United States.

OCTOBER TERM, 1892.

TERM No. 143.

HENRY HUBER ET AL., APPELLANTS,

vs.

THE N. O. NELSON MANUFACTURING CO.

BRIEF FOR APPELLEE.

SENECA N. TAYLOR AND
BENJAMIN F. REX,
Counsel for Appellee.

IN THE

UNITED STATES SUPREME COURT.

HENRY HUBER ET AL.

vs.

N. O. NELSON MANUFACTURING CO.

In Equity.
No. 13,724.

BRIEF AND ARGUMENT FOR DEFENDANT.

This is a suit for the infringement of letters patent No. 260,232, issued June 27, 1882, to Henry Huber, assignee by mesne assignments, of Stewart Peters and William Donald, and, re-issued letters patent No. 10,826, issued April 19th, 1887, to James E. Boyle.

The only claims of said patents alleged to be infringed, are the first three, of letters patent No. 260,232, and the first two, of re-issued letters patent No. 10,826.

The defenses to the Peters and Donald patent relied upon are:

1st. That said patent is void because a foreign patent for the same invention had been obtained by Messrs. Peters and Donald, and allowed to expire before said letters patent of the United States were applied for, and, the grant of the American patent was without authority of law.

2nd. That said patent is void, because Messrs. Peters and Donald had intentionally, and in fact, abandoned their right to letters patent of the United States, before their application for an American patent was filed, and before any assignment was executed.

The defenses to the Boyle re-issued patent, relied on, are:

1st. That the claims alleged to be infringed are void for lack of substantial novelty in the subject matters thereof.

2nd. That said claims are void for lack of invention in the subject matters thereof.

3rd. That said claims are void because not contained in the original letters patent, and because they are not for the same alleged invention originally described and claimed.

4th. That neither of said claims cover any combination originally intended to be covered, but were suggested by the grant of a later patent and were applied for so as to cover the combinations claimed in said patent.

5th. That the omission of said claims from the original patent did not arise "by reason of inadvertence, accident or mistake," and, said original patent was not rendered inoperative or invalid "by reason of a defective or insufficient specification."

6th. That said re-issued patent is broader than the original and was not applied for within a reasonable time.

7th. That defendant has not infringed.

THE PETERS AND DONALD PATENT WAS VOID AB INITIO.

The facts relating to the Peters and Donald patent are as follows:

British patent No. 1207, dated April 7th, 1874, was granted to Stewart Peters and William Donald, more than eight years before their American patent for the same invention, was granted. The British patent is in evidence and is marked Complainant's Exhibit 3. The blue book is marked Complainant's Exhibit 4 (Record, p. 38.) There is no question about the invention therein set forth, being the same, as the one claimed in the Peters and Donald patent sued on in this case.

The British patent was granted for a term of fourteen years, but contained the following provisions, to wit:

"And * * * if the said Stewart Peters and William Donald, their executors, administrators or assigns, shall not pay the stamp duty of fifty pounds and produce these our letters patent stamped with a proper stamp to that amount at the office of the said commissioners of patents for inventions, before the expiration of three years from the date of these our letters patent, pursuant to the provisions of the act of the sixteenth year of our reign, chapter 5. And, also, if the said Stewart Peters and William Donald, their executors, administrators or assigns, shall not pay the stamp duty of one hundred pounds and produce these are letters patent stamped with a proper stamp to that amount at the said office of our commissioners, before the expiration of seven years from the date of these our letters patent, pursuant also to said act * * * that then and in any of said cases these our letters patent and all liberties and advantages whatsoever hereby granted shall utterly cease and determine and become void, anything hereinbefore contained to the contrary thereof in anywise notwithstanding."

The fifty pounds stamp duty was paid, but the one hundred pounds stamp duty, due at the expiration of the seventh year from the date of the British patent, was not paid (Record p. 300 and Complainant's Ex. 3), and the said British "Letters Patent expired" in consequence, April 7, 1881, (see copy of Patent Register, last entry, Record, p. 378), and on April 15th, 1881, the British Commissioners of Patents published to the world in the Commissioners of Patents Journal, No. 2487, the following statement, to wit, under the heading:

"PATENTS WHICH HAVE BECOME VOID IN THE WEEK ENDING 9TH DAY OF APRIL, 1881, THROUGH NON-PAYMENT OF THE ONE HUNDRED POUND STAMP DUTY," the words and figures following:

"1207, Stewart Peters of Glasgow in the County of Lanark North Britain, coppersmith, and William Donald, of the same place, plumber, for an invention of improvements in and connected with water-closets, and in part applicable for the supply or discharge of various liquids, dated 7th April, 1874." (Record, pp. 377-378.)

Mr. James E. Boyle, of Brooklyn, N. Y., entered the field in the spring of 1881, and constructed a working closet embodying the Peters and Donald invention, and having tried it and found it satisfactory in its workings applied for letters patent of the United States, Aug. 3, 1881. He was referred by the Patent Office to the Peters and Donald, British patent, and compelled to make such a broad disclaimer, and so narrow his claims, as to make his patent when issued substantially worthless. (Record, pp. 131-133 X-Q's. 614-636; see also, Letters Patent of the United States No. 255,485, Exhibits, p. 14.)

When Mr. Boyle was referred to the Peters and Donald patent, by the Patent Office, the idea of using Peters and Donald, to obtain an American monopoly, originated. Shortly thereafter Boyle induced Mr. Huber to advance the necessary funds, and sailed to Europe as Huber's agent to try to induce Peters and Donald to apply for an American patent for Huber's benefit (Record pp. 115-116, X-Q's 392-399). Mr. Boyle first went to London, there had an assignment from Peters and Donald to him, in the nature of a quitclaim, of the right to an American patent for the Peters and Donald invention, prepared (Record, pp. 116-117; X-Q's 400-403 and Ex-

hibits, p. 28, complainant's Ex. 14) and then went up to Glasgow, found Peters and Donald, *and induced them to execute the assignment and sign and swear to the application, on October 27, 1881 (more than six months after the expiration of the British patent), in consideration of the payment to them of the total sum of fifty dollars* (Exhibits, p. 28 ; Complainant's Ex. 14 ; Record pp. 116-117; X-Q's 402-407).

An assignment from Boyle to Huber was executed for a nominal consideration November 26, 1881 (Exhibits, p. 27; complainant's Ex. 13).

Huber paid the expenses of obtaining the American patent. Peters and Donald had nothing to do with it (Record pp. 70-71 X-Q's 43-47 and p. 118 X-Q's 415-419).

The application for letters patent of the United States was filed November 29, 1881, seven months and twenty-two days after the British patent had been allowed to expire. *The Patent Office not being informed of the expiration of the British patent* (Record, p. 71 ; X-Q. 53) *granted the American patent to Huber as assignee of the inventors, June 27, 1882, one year, two months and twenty days after the expiration of the British patent.* (Exhibits, p. 3 ; complainant's Ex. 1).

We submit that the facts show both a constructive abandonment of the right to an American patent and an intentional abandonment in fact.

ALLOWING THE BRITISH PATENT TO EXPIRE BEFORE APPLYING FOR LETTERS PATENT OF THE UNITED STATES, A CONSTRUCTIVE ABANDONMENT OF THE RIGHT TO AN AMERICAN PATENT.

Sections 4886 and 4887 of the Revised Statutes, read as follows :

"§4886. Any person who has invented or discovered any new and useful art, machine, manufacture or composition of matter, or any new and useful improvement thereof, not known or used by others in this country, and not patented or described in any printed publication in this or any foreign country, before his invention or discovery thereof and not in public use or on sale for more than two years prior to his application, unless the same is proved to have been abandoned, may, upon payment of the fees required by law, and other due proceedings had, obtain a patent therefor."

"§4887. No person shall be debarred from receiving a patent for his invention or discovery, nor shall any patent be declared invalid by reason of its having been first patented or caused to be patented in a foreign country, unless the same has been introduced into public use in the United States for more than two years prior to the application. But every patent granted for an invention which has been previously patented in a foreign country shall be so limited as to expire at the same time with the foreign patent, or, if there be more than one, at the same time with the one having the shortest term, and in no case shall it be in force more than seventeen years."

We submit that these sections of our statutes authorize the granting of letters patent of the United States for an invention previously patented abroad, only, where the foreign patent remains in force, and impliedly forbid the granting of an American patent after the grant of a foreign patent for the same invention, where the foreign monopoly has gone out of existence, before letters patent in the United States are applied for.

Under the acts of 1790, 1793, 1800 and 1832 the taking out of a foreign patent, before applying for letters patent of the United States amounted to an abandonment of the right to an American patent.

Shaw vs. Cooper, 7 Pet. 292;
In re. Duplat, 1 Opinions of Attorney Generals, 333.

The act of July 4th, 1836 (section 8), modified the rule previously established, and provided that nothing in the act

"Should be construed to deprive an original and true inventor of the right to a patent for his invention by reason of his having previously taken out

letters patent therefor in a foreign country, and the same having been published at any time within six months next preceding the filing of his specification and drawings."

The act of March 13th, 1839 (section 6), again modified the rule by the provision:

"That no person shall be debarred from receiving a patent by reason of the same having been patented in a foreign country more than six months prior to his application, provided, that the same shall not have been introduced into public and common use in the United States prior to the application for such patent: and provided, also, that in all cases every such patent shall be limited to the term of fourteen years from the date or publication of such foreign patent."

Down to 1836 taking out a foreign patent for an invention before applying for an American patent operated under our statutes as an abandonment of the right to a patent here, regardless of intention. Under the act of 1836 taking out a foreign patent and failing to apply for an American patent within six months after the granting and publication of the foreign patent operated as an abandonment. Under the act of 1839, where the American patent was not applied for within fourteen years after the date of a foreign patent for the invention, no American patent could be issued, whether there was any intention to abandon or not. Evidently a patent limited to expire fourteen years after a date, more than fourteen years past at the time of its granting, would have been a nullity, and can not be supposed to have been authorized by the act.

Under §25 of the Act of 1870 (now §4887 R. S. U. S.), taking out a foreign patent, and delaying to apply for letters patent of the United States until after the expiration of the foreign patent, amounts to a constructive abandonment of the right to an American patent. Evidently, if the foreign patent is no longer in force—if it has no existing term—if it can not possibly have any future duration—it would be absurd to limit an American patent to expire with it. That this is true where the

foreign patent has been granted for a fixed term (with, or without, a right to an extension or renewal, upon complying with conditions precedent), and after running to the end of the original term, therein specified, has gone out of existence, and the monopoly has forever expired, will hardly be denied. We submit that it is equally true in cases like the present, where the term of the foreign patent, though nominally fourteen years, is limited to expire seven years after the date of the patent, unless a specified condition is performed, and by reason of the non-performance of such condition, expires at the end of the seventh year. Such a patent expires, under such circumstances, at the end of the seventh year, as completely and absolutely, as a patent granted for seven years, with a right to have it extended or renewed for seven years longer, would, if the patentee failed to obtain the extension or renewal.

The object of Congress, as Commissioner Fisher said, two months after the Act was passed, in the first case ever decided under it, was:

"*To obtain for this country the free use of the inventions of foreigners as soon as they became free abroad.*"

All European countries had between 1839 and 1870, adopted the same policy. England, by her Patent Law Amendment Act of 1852, had embodied it in her law. That Act provided (section 25) that:

"Where, upon any application made after the passing of this act, letters patent are granted in the United Kingdom for or in respect of an invention first invented in any foreign country, or by the subject of any foreign power, or state, and a patent or like privilege for the monopoly or the exclusive use or exercise of such inventions in any foreign country is there obtained, before the grant of such letters patent in the United Kingdom, all rights and privileges under such letters patent shall, notwithstanding any term in the letters patent limited, cease and be void immediately upon the expiration or other determination of the term during which the patent or like privilege obtained in such foreign coun-

try shall continue in force or where more than one such patent or like privilege is obtained abroad immediately on the determination of the term which shall first expire or be determined of such several patents or like privileges."

Except that the American statute, appears broad enough to include all cases where foreign patents are taken out first, the American act is substantially the same as the English, though in a more condensed form.

The decision of Commissioner Fisher, above referred to, was made in Mushet's case (Com., Dec., 1870, p. 106), which is the only American case in which the facts resemble the facts in the case at bar.

It appeared that Mushet had applied for an extension of his American patent after his English patent had been allowed to lapse. In delivering his opinion the learned Commissioner, after quoting the English statute, said:

"It would appear from this provision that if the patentee fails to pay the additional duty at the end of three or seven years that the patent immediately expires. It is not voidable, but void; and letters patent more than three years old which do not bear upon their face the appropriate stamps showing the payment of the additional duty are worth no more than waste paper. The grant ceased, determined, expired, at the end of the third year, in the manner and to the same extent and with the same effect as if it had been made for three years only. I can not doubt, therefore, under the state of facts recited in this petition that the English letters patent granted to Robert Mushet expired on Sept. 22d, 1859. * * *

"When, therefore, the statute declares that the patent shall expire at the same time with the foreign patent, I am clearly of the opinion that if at the expiration of the original term it appears that the foreign patent has already expired no prolongation of the term of the American patent can be permitted. This is in accordance with the letter and spirit of the enactment.

"*The intention of Congress obviously was to obtain for this country the free use of the inventions of foreigners as soon as they became free abroad.*

"This is indicated by the use of the phrase 'first patented or caused to be patented in a foreign country,' for it was presumable that American citizens would obtain their first patent here, while a foreigner would first patent his invention in a foreign country.

Co., the patentee has no right to have the life of his foreign patent extended for one or more additional terms. The fundamental question is, as to the extent of the right or monopoly—the possible duration or time which the monopoly has to run if kept alive as long as the patentee has, at the date of the American patent, a right to keep it alive—and as we understand the language of this Court in the opinion delivered in the case of *Pohl* vs. *Anchor Brewing Co.* (134 U, S. 405), the word "term" is there used in the sense of right or monopoly, just as it is sometimes used with reference to leases, as meaning the estate of the lessee, for, though it is said in *Pohl* vs. *Anchor Brewing Co.*, that the term of the foreign patent involved in the case of *Bate Refrigerating Co.* vs. *Hammond*, was held in that case "to be fifteen years, and not five years," that would seem clearly to be true only where the word "term" is understood in the sense above suggested, for, the patentee in *Bate Refrigerating Co.* vs. *Hammond*, was evidently in the same position with reference to an extension, as a lessee, who has a right to obtain a renewal of his lease by performing specified conditions precedent, stands with reference to the second term, before it is obtained.

The cases involving leases cited in *Pohl* vs. *Anchor Brewing Co.* seem to apply only where, as in the case then before this court, the foreign patent was in force at the date of the American patent. In such cases, the possible future termination of the monopoly, through a forfeiture, is not regarded in fixing the term of the American patent. It is presumed that no forfeiture will take place, and upon that presumption the term of the American patent is fixed. Where a forfeiture or lapse has already taken place, and the foreign patent has gone out of force, there is no room for any such presumption.

In *Bate Refrigerating Co.* vs. *Hammond*, where the patentee had a right at the date of the American patent to obtain a renewal or extension of the term running at the date of the American patent, the term (using the word "term," not in the sense of monopoly or right, but in the sense of time between fixed limits) was held not to govern, and the Circuit Court decisions holding the contrary were expressly overruled, and throughout that case, as well as that of *Pohl* vs. *Anchor Brewing Co.*, it is evident that the expiration of the right or monopoly, and not the expiration of the time specified as the term of the patent, was considered controlling. Thus it was said in the opinion delivered in that case:

"By the language of §17 of the Canadian Act of 1872, what was granted under it was 'an *extension of the patent*' *of the same patent for a further term*. Therefore the Canadian patent does not expire, and it never could have been properly said that it would expire before January 9, 1892."

The word "patent" was evidently there used by this Court in the sense of monopoly or exclusive right, and in the same opinion we find the following interpretation of the American statute, viz.:

"These provisions of the act of 1870, and of the Revised Statutes, mean that the United States patent shall not expire as long as the foreign *patent continues to exist*, not extending beyond seventeen years from the date of the United States patent, but shall continue in force, though not longer than seventeen years from its date, *so long as the foreign patent continues to exist*."

The word "*patent*" is evidently used here, also, in the sense of monopoly or right.

Both in *Bate Refrigerating Co.* vs. *Hammond*, and *Pohl* vs. *Anchor Brewing Co.*, the idea that the estate, right, or monopoly must be existing and in force, at the date of the American patent, was clearly enunciated. Thus in *Bate Refrigerating Co.* vs. *Hammond*, it was said that the American patent "is to be *in force as long as the foreign patent is in force*," and the opinion

was based upon the fact, among others, that the fifteen years' "*term*" of the Canadian patent had "*never ceased to exist, but*" *had* "*been in force continuously from January 9, 1877*," and "*was in force when No. 197,314 was issued*" and the further fact that at the time of the grant of the American patent it could not be said with certainty that the Canadian monopoly would expire before January 9, 1892, the time to which the patentee had a right to have it extended by applying for an extension and performing conditions precedent required by law. *It was certain that the time specified in the patent as its term "would expire before January 9, 1892," but not that the monopoly or right would.*

So in *Pohl* vs. *Anchor Brewing Co.*, it was said:

"There is nothing in the statute which admits of the view that the duration of the United States patent is to be limited by anything but the duration of the legal term of the foreign patent *in force at the time of the issuing of the United States patent.*

Repeatedly we find it stated in substance, in the opinion delivered in said case, that *it is the time which the foreign patent or monopoly has to run which must govern.* Thus it was said:

"Section 4887 requires that the United States patent shall be so limited as to expire at the same time with the term limited by the foreign patent issued prior to the issuing of the United States patent *having then the shortest time to run.*"

At another point, in the same opinion, it is said, with reference to the requirements of section 4887:

"That if there be more than one prior foreign patent the United States patent shall be limited to expire 'at the same time with that one of such foreign patents having the shortest term.' *This means the foreign patent which at the time the United States patent is granted has then the shortest term to run.*"

There the word "*term*" is evidently used as synonymous with time.

The object of Congress having been "to obtain for this country the free use of the inventions of foreigners as soon as they became free abroad," it is evident that if the American patent were limited to expire with the foreign patent granted for the shortest specified time, and not the one which would first go out of force, the result would often, be just the reverse of the one intended by Congress, and doubtless this Court had that fact in mind when *Pohl* vs. *Anchor Brewing Co.* was decided. Thus if there were two foreign patents, one granted for a term of fourteen and the other for a term of fifteen years, and the former had been granted the year before the date of the American patent, and the latter, fourteen years before the date of the American patent, then if the American patent were limited to expire with the foreign monopoly which would first expire, it would expire one year after date; but if limited to expire with the patent granted for the shortest time, it would be limited to expire twelve years after the invention had become free abroad.

It therefore appears that Congress used the word "term" as meaning "*time to run*" at the date of the American patent. Any other interpretation leads to untenable conclusions.

Now in this case the foreign patent was not in force at the date of the American patent. It was not in force when the American patent was applied for. It had been granted for an uncertain term—a term which was to run fourteen years if certain conditions were performed, but was, according to the terms of the grant, to expire at the end of seven years if the patentee failed to pay a specified fee. The specified fee was not paid, and at the end of the seventh year the patent expired and ceased forever to have any further force or effect, and its expiration was officially published to the world

by the British Commissioner of Patents. The expiration took place April 7, 1881. At that date the monopoly granted by the British Government expired forever. The American patent was not applied for until November 27, 1881, and was not granted until June 27, 1882, one year, two months and twenty days after the foreign patent had ceased to have any force or effect and had gone out of existence and the invention had become free to all in England. It is clear that the foreign patent had no time whatever to run at the date of the American patent. The patentee had no right to keep it alive even for one moment longer. It had no possible future duration. The foreign monopoly had expired, and ceased forever to exist. There was, therefore, nothing upon which to base a presumption of future existence, or a presumption that the expiration of the foreign patent would occur at a future date. Hence, the grant of the American patent was made without authority of law. The delay in applying for letters patent of the United States had amounted to a constructive abandonment under our statute, and to uphold the American patent, under the circumstances, would, we submit, violate the plain spirit and letter of the act.

PETERS AND DONALD INTENTIONALLY ABANDONED THEIR INVENTION.

We submit that Messrs. Peters and Donald not only abandoned their right to an American patent at law, but intentionally abandoned it, in fact.

It was argued in the Circuit Court that the intention of Messrs. Peters and Donald to abandon, if it existed, was not material, inasmuch as their invention had not "been introduced into public use in the United States for more than two years prior to the application," but we submit that § 4887 must be read in connection with the

preceding section of our statutes, in which the same provisions as to public use is followed by the proviso: "unless the same is proven to have been abandoned," and that § 4887 should be understood just as if said provision as to abandonment were inserted in it, as in the preceding section, after the provision as to public use.

We submit that § 4887 merely prevents the mere fact that a foreign patent has been previously obtained from operating as a bar to the grant of an American patent, provided the American patent is applied for and obtained while the foreign patent is in force and before it has been more than two years in public use in this country, without affecting the question of the effect of intentional abandonment. It is very clear that the effect of an express declaration of abandonment is not affected by section 4887 of our statutes, and any other abandonment in fact must be governed by the same rule.

The defense of abandonment in fact is always open to a defendant, and it is well settled that the abandonment may even take place after an American patent is obtained, and that where abandonment has once taken place, it can not be retracted. Evidence of an express declaration of abandonment is not necessary. "Conduct equally significant with language" is sufficient. It may be presumed, from delay in applying for a patent or other circumstances, indicating an intention to abandon.

Woodberry Planing Machine Co. vs. Keith, 11 Otto 479–494;

The Agawam Woolen Co. vs. Gordan, 7 Wall, 583–610;

Pennock vs. Dialogue, 2 Pet. 1–24;

U. S. Rifle and Cartridge Co. vs. Whitney Arms Co., 118 U. S. 22–24;
Kendall vs. Windsor, 62 U. S. 322–329;
Shaw vs. Cooper, 32 U. S. 292–319;
Walker on Patents, § 87 *et seq.*

In two cases a delay of eight years in applying for a patent (*Consolidated Fruit Jar Co.* vs. *Wright*, 94 U. S. 92; *Keyes* vs. *Grant*, 118 U. S. 22–24) and in one a delay of nine years (*Rowley* vs. *Mason*, 2 Am. L. T. Rep. 106), after the invention had became publicly known through use, has been held sufficient proof of abandonment. So in cases where an inventor waits for an unreasonable time before applying for a broadened re-issue the delay has frequently been held sufficient evidence of his abandonment of improvements originally described but not claimed, and a delay of two years is usually held conclusive evidence of an intention to abandon. (*Miller* vs. *Brass Co.*, 104 U. S. 35; *Wollensok* vs. *Reiher*, 115 U. S. 96–100; *Coon* vs. *Wilson*, 113 U. S. 268; *Parker, Whipple & Co.* vs. *Yale Clock Co.*, 123 U. S. 87; *Topliff* vs. *Topliff*, 145 U. S. 171.) So where a patentee describes two inventions in his specification and only claims one, even a few months' delay in applying for a patent for the unclaimed invention, after the patent describing it has been issued, has been held sufficient evidence of abandonment. Thus in *Swift* vs. *Jenks* (29 F. R. 642) where the delay was less than three months, abandonment was held made out. In *Holmes Electric P. Co.* vs. *Metropolitan Burglar Alarm Co.* (33 F. R. 258), the delay had been less than a year and the second patent was held void. See also *Mahn* vs. *Harwood*, 112 U. S. 354.

In this case Messrs. Peters and Donald delayed to make their application for seven years and seven months

after the most complete description of their invention had been published, and until seven months after they had deliberately abandoned their home patent.

A man who is not heard from for seven years is presumed to be dead, and it is certainly not unfair to presume that a man who fails to apply for a patent for more than seven years after his invention is completed and published to the world by means of a printed description and elaborate drawings has abandoned his invention to the public.

All the facts in this case point clearly to an intention to abandon. The great delay in applying for a patent after the publication of a printed description of the invention; the abandonment of the home patent after the payment of the first stamp duty; the continued delay in applying for an American patent after said abandonment of the home patent; and until after an American had constructed a closet embodying the invention, and applied for a patent on it; the assignment in the nature of a quit-claim for an almost nominal consideration ($50), and the fact that when the American patent was applied for it was at the instance and expense, and for the sole benefit, of a third party, are circumstances which, when coupled together, leave, we submit, no room for doubt as to the intention of the inventors. It is clear, we think, that Messrs. Peters and Donald had not only lost their right, under our statute, to an American patent by allowing their home patent to expire, but had intended to abandon, and had, in fact, abandoned their invention to the world, before the assignment to Boyle was executed.

THE INVALIDITY OF THE BOYLE RE-ISSUE BECAUSE OF LACK OF EITHER NOVELTY OR INVENTION.

When Mr. Boyle entered the field pneumatic closets were old. Messrs. Peters and Donald, in England, and Mr. Bunting, in the United States, had preceded him.

In his first pneumatic closet he adopted not only the same bowl and traps previously used by Peters and Donald but also the same form of pump used by them. He applied for letters patent of the United States on that closet, Aug. 5, 1881, but was not able to obtain a patent with claims broad enough to be of any substantial value because of the prior British patent of Peters and Donald. The patent issued March 28, 1882, on that application (No. 255,485, Exhibits p. 14), is confessedly his best, from a sanitary point of view, because it prevents foul air from entering the room and measures the amount of water furnished to the bowl, substantially as the closet shown in the Peters and Donald patent does. It sells for $50, while injector closets only sell for $37.50. (Record, p. 100; X-Qs. 58-59; p. 328, 228, pp. 292-293, Qs. 62-65; pp. 253-254, X-Qs. 443-455.) Mr. Boyle next constructed a cheaper closet, in which he substituted an injector pump for the pump previously used by him and Messrs. Peters and Donald, and obtained letters patent of the United States, No. 291,139, on Jan. 1, 1884, therefor. (Exhibits p. 19.) A broadened re-issue, No. 10,826, was granted April 19, 1887 (Exhibits p. 8), and that is the Boyle patent sued on in this case. (Record, pp. 36-40.) Upon the three leaves of this brief, following this one, drawings of said closets will be found, arranged in chronological order.

THE PETERS AND DONALD CLOSET.

(Exhibits, p. 3.)

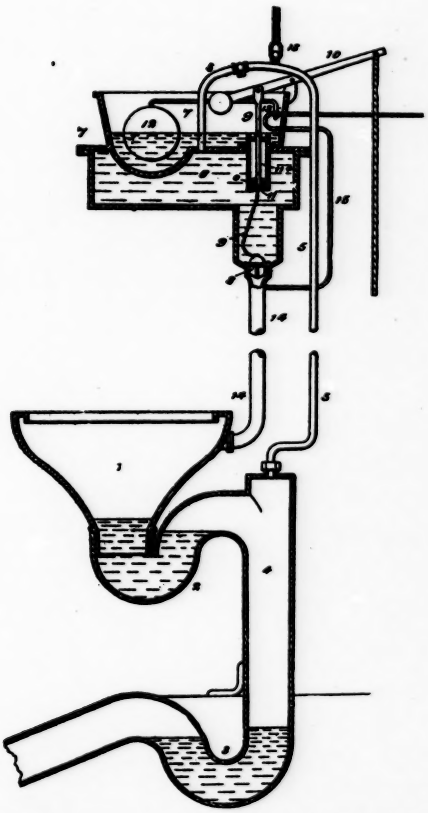

1, the bowl; 2, the upper trap; 3, the lower trap; 4, space between traps; 5, air exhaust pipe, leading from space between traps to vacuum chamber; 6, vacuum chamber; 7, reservoir tank; 8, valve closing flushing pipe; 9, rod attached to lever and chain connecting it with valve 8; 10, lever; 11, valve for closing passage between reservoir and vacuum chamber when valve 8 is unsealed; 11a, valve rod; 12, float regulating supply valve; 13, supply valve; 14, flushing pipe; 15, bleeder pipe for after-wash; 16, pipe for escape of sewer gas.

FIRST BOYLE CLOSET.

(Exhibits, p. 14.)

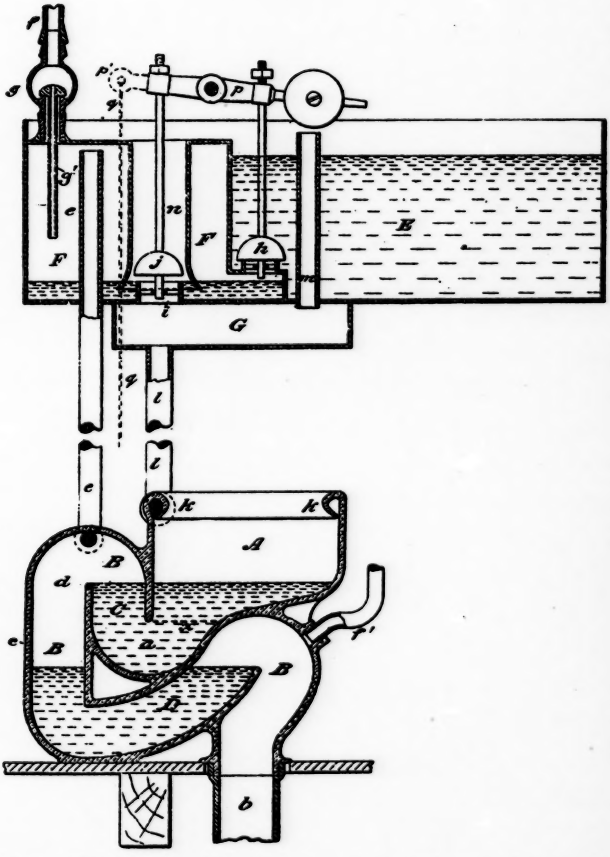

A, the bowl; C, the upper trap; D, the lower trap; B, the space between traps; e, the air exhaust pipe leading from the space between traps to the vacuum chamber; F, the vacuum chamber; E, the reservoir tank; j, the valve closing the flushing pipe; n, the rod connecting valve j with a lever; P, the lever; h, valve for closing communication between the reservoir tank and vacuum chamber when valve j is unseated and having valve-rod for attaching it to lever P; l, the flushing pipe; g, small air pipe to give after-wash by breaking the vacuum and allow sewer gas to escape; f, pipe for escape of sewer gas; G, service box; m, an overflow pipe.

BOYLE INJECTOR CLOSET.

(Exhibits, p. 8.)

Fig. 1.

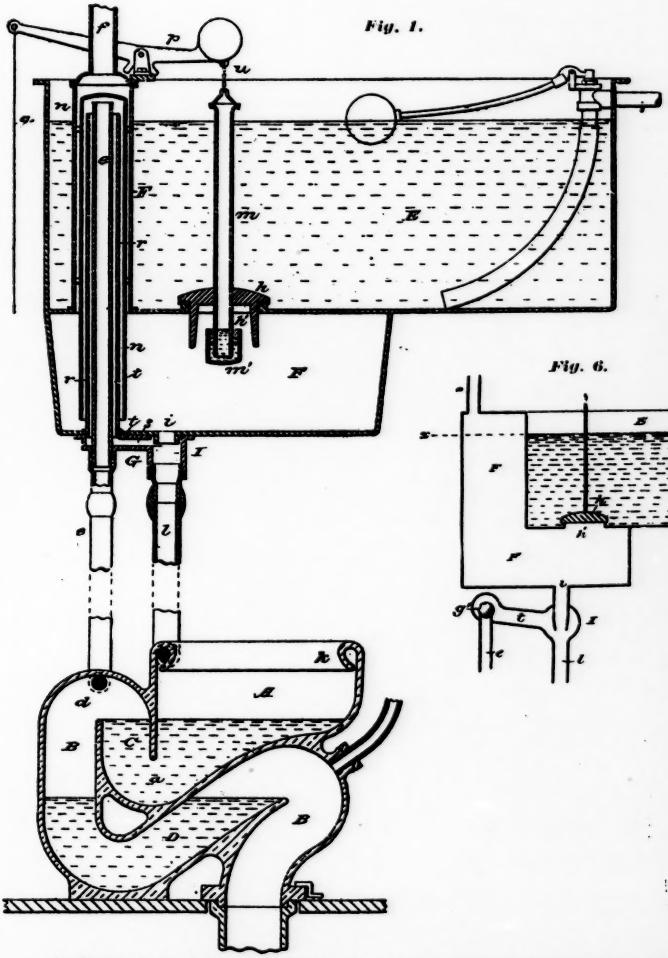

Fig. 6.

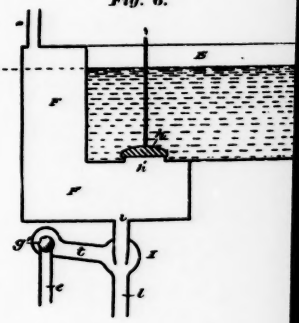

A, the bowl; C, the upper trap; D, the lower trap; B, the space between traps; e, the air exhaust pipe leading from the space between the two traps to top of bell t, by which it is connected with pipe r, leading to injector G, the bottom of bell t being sealed with water during most of the operation of flushing; F, the flushing chamber; I, the injector pump of which s is the vacuum chamber and i its nozzle or water passage; E, the reservoir tank; p, the lever; k, the valve for closing the passage between the reservoir tank and flushing chamber and pump when pumping is going on; u, the valve rod of h; l, the flushing pipe; f, the pipe for allowing after-wash and escape of sewer gas, which gas can also escape into room through the injector; m, overflow tube; m', cup for sealing said tube. Fig 6, modification.

We here propose to show that the first and second claims of the Boyle re-issue are void for lack of either substantial novelty or invention in the subject matters thereof, as well as for the other reasons hereinafter discussed.

Said first and second claims are as follows:

"1. A water-closet consisting of a bowl, with the soil passage leading therefrom and two successive traps in said passage in combination with a flushing pipe for conveying water to the bowl, a suction injector arranged in connection with said pipe and to be traversed by the flushing water, and an air pipe leading from the air space between said traps and communicating with said injector, substantially as set forth, whereby the flow of water through said injector serves to draw air from said space."

"2. A flushing apparatus for water-closets consisting of the combination of a reservoir tank, a flushing valve controlling the outlet thereof, a flushing pipe for conveying water therefrom to the bowl of the closet, a suction injector arranged in connection with said pipe and to be traversed by the descending flushing water, and a suction pipe in connection with said injector whereby the water in flowing from said tank downward through the flushing pipe traverses said injector and sucks the air from said suction pipe."

It will be observed that in the combination covered by the first claim, there is a bowl having two traps, with an air space between them, and an air pipe connected with the injector, and communicating, also, with the space between said traps, and that the combination only lacks a source of water supply and a valve for controlling the flow of water, to make it a complete closet; while in the second claim the construction is not a water-closet, but is called a flushing apparatus for one. No traps are

specified in the second claim, and no special form of bowl, and the flushing water does not serve to draw air from any space between traps, but merely "from said suction pipe" connected with the injector. The combination is called a flushing apparatus, but the injector does not assist in flushing the bowl. It would seem, therefore, that by the second claim, the applicant has attempted to cover the idea of operating an injector pump by the fall of water from a flushing tank to the bowl of a closet. Evidently the closet bowl does not assist the injector in any way, or the injector, the bowl, or the valve, either one; each would operate just the same in the absence of the other, and do the same work precisely. We are therefore reduced down to the combination of a reservoir tank, a pipe leading therefrom, an injector located in the pipe so as to be operated by water flowing through it and an air pipe connected with the injector, as the parts to be considered, together. Confessedly all these parts were very old when Mr. Boyle entered the field (Record, pp. 97-98; X-Q's 239-243).

Tank closets were very old, the prior Boyle and Peters and Donald closets both belonged to that class; so did the Demarest (Exhibits, p. 46) and Craigie (Exhibits, p. 51) closets. In the injector closet Boyle adopted the same tank he had used in his first closet. (See the testimony of complainants' expert as to tanks and valves, Record, p. 42.) Injectors were equally old. Mr. Boyle testified that injectors had been well known as air and water-pumps ever since he had been a man (Record, p. 125; X-Q. 518). Indeed, all the witnesses on both sides concurred in stating that injectors operated by the fall of water were very old. Among those in evidence we will mention the Eades pump shown in letters patent No. 105,056,

dated July 5, 1870 (Exhibits, p. 48); the Shapleigh pump shown in letters patent No. 54,615, dated May 8, 1866 (Exhibits, p. 43); the stop-cock injector for water-closets shown in Horne's patent No. 261,155, dated July 18, 1882 (Exhibits, p. 56); the Thompson jet pump shown and described in Chamber's Encyclopœdia, published in Philadelphia, A. D. 1868 (Record, p. 372); the Johnson pump shown and described in Ure's Dictionary of Arts, Manufactures and Mines, published in the United States, A. D. 1875 (Record, p. 373), and the Sprengel pump shown and described in Knight's American Mechanical Dictionary, published in this country, A. D. 1877 (Record, p. 369).

The following cuts illustrate the three last pumps mentioned:

Thompson's Pump.

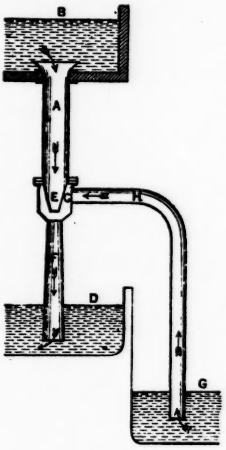

Fig. 9.

Johnson's Pump.

95.

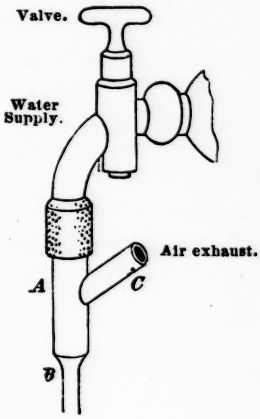

Sprengel's Pump.

Fig. 393.

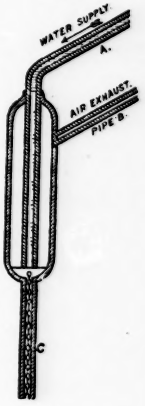

In each, the pump is operated by the fall of water through it.

In the Thompson pump the source of supply is a tank, the injector is the same as the one adopted by Mr. Boyle and shown in the drawings of his patent, and neither of the elements which co-operate in the combination covered by Boyle's second claim is lacking, if we give his claim a construction broad enough to include a reservoir tank without a service box. Evidently it required no invention to supply the tank with a valve for the purpose of shutting off the water from the outlet pipe when desired. Valves suitable for use are shown in Boyle's earlier patent (Nos. 255,485 and 249,577; Exhibits, pp. 14 and 30), the Peters and Donald patent (Exhibits, p. 3), the Demarest patent of 1879 (Exhibits, p. 46), and the Craigie patent of 1867 (Exhibits, p. 51); indeed, valves have always been used with tanks, as a necessary connection.

A valve in connection with an injector is shown in the cut of the Johnson Injector and Horne's Stop-cock Injector for Water-closets (Exhibits, p. 56). It evidently required no invention to connect the pipe fig. 9 of the Thompson pump with the bowl of a closet. It seems too clear for argument that the combination claimed by the second claim of the patent is a mere aggregation, shows no invention whatever, and is in substance old. The claim amounts to nothing more than an attempt to cover the use of an old pump in a combination in which it operates precisely as it has always operated out of it.

As to the combination covered by the first claim, it amounts to nothing more, we submit, than the substitution of one old pump for another old pump, without the exercise of anything more than the most ordinary mechanical ability in making the substitution.

The bowl and two traps used, both appear in the Peters and Donald patent and the first Boyle patent. So also both the earlier pneumatic closets have the same

flushing pipe leading to the bowl, and the same air pipe leading from the space between the two traps to the pump used for pumping out the bowl. The cuts of the three closets hereinbefore inserted, show the identity of the closets in these particulars very clearly:

All three closets are alike also in the fact that the suction pump used, is in each operated by the fall of flushing water to the bowl of the closet. As will be remembered, no tank or valve enters into the combination claimed by claim one; if added, the claim would have been equally void, in view of the prior act.

Mr. Frazier, the complainant's expert, has substantially admitted that, according to his interpretation of said first and second claims, Mr. Boyle merely substituted one old pump for another, well known to be its equivalent. Upon this point we will quote from the testimony of Mr. Frazier, when comparing the defendant's injector closet with the Peters and Donald closet:

X-Q. 250. THEN, AS I UNDERSTAND YOU, MESSRS. PETERS AND DONALD USE A RESERVOIR TANK AND AN AIR PUMP BENEATH IT, INTENDED TO BE OPERATED BY THE FALLING OF FLUSHING WATER, AND TO EXHAUST THE AIR FROM THE AIR SPACE BETWEEN THE TWO WATER-TRAPS, AND THE DEFENDANTS HAVE SIMPLY SUBSTITUTED FOR THE AIR PUMP WHICH IS SHOWN IN THE PETERS AND DONALD PATENT ANOTHER FORM OF AIR PUMP, WHICH WAS KNOWN AT THE TIME THAT THE PETERS AND DONALD PATENT WAS GRANTED IN THE UNITED STATES, TO BE AN EQUIVALENT THEREOF? A. YES, THAT IS ABOUT AS I UNDERSTAND IT." (Record, p. 99.)

He had previously testified that each element used by the defendant was known at the date of the Peters and Donald invention to be the equivalent of the corresponding element shown in said patent.

"They were not," he said, "known as such in that combination prior to the Peters and Donald invention, but the separate elements, each performing its own function, were, I believe, known to be equivalents to the extent of performing the separate functions." (Record p. 96, X-Qs. 231–232, and pp. 97–98, X-Qs. 238–242.)

Professor Woodward, Mr. Henry Fladd, Mr. Samuel Knight, and the practical expert, Mr. Peter White, all testify that the substitution of the injector for the aspirator used by Peters and Donald, was merely the substitution of one well-known pump for another whose equivalent it was known to be, and that its application required nothing more that ordinary mechanical skill. (Record p. 295, Q. 80; p. 326, Q. 18, *et seq.* p. 363; Q. 48, *et seq.* p. 352. Q. 44.)

If, then, the injector was a well-known pump—one which every one knew could be substituted for the aspirator previously used by Peters and Donald and Boyle, and it was known that it would do the work performed by the pump shown in the Peters and Donald patent, except measuring the water, the invention of Mr. Boyle must have resided, if it resided any place, in the peculiar way in which he set the injector to work when he began to use it instead of the other pump. As a matter of fact, he arranged it in the form of construction shown in Fig. 6 of his patent, just as it is shown in Chamber's Encyclopœdia and in our other exhibits, in a vertical pipe, by which it could be supplied with water.

The arrangement followed, as a matter of course, from the nature of the pump. A mechanic who desires to operate machinery of any kind by means of a steam engine, knows that because of the nature of an engine he must connect it with a steam boiler as well as with the machinery to be driven, and the nature of the respec-

tive connections will follow from the nature of the engine. So also, a mechanic desiring to use an undershot water wheel, for the purpose of driving any kind of machinery, would know that he would have to have a flow of water and that the water would have to be led beneath the wheel. If he desired to use an overshot wheel, he would know that the nature of the wheel would necessitate a supply of water led to or near, the top of the wheel. In fact the use of any sort of machine necessitates the use of one or more well-known prerequisites. The use of an injector designed to be operated by the fall of water requires a water supply arranged above it and communicating with it, and also necessitates the connection of the pump with the air chamber or pipe from which the air is to be exhausted. These things may almost be considered part of such an injector, for they are necessary in all cases and their use follows as a matter of course where that form of pump is selected.

It would seem clear therefore that the arrangement of the injector in a flushing pipe designed to convey water to the bowl of a closet, and connecting it with the space between the two traps in a Peters and Donald bowl, so as to pump out the contents of the bowl when set in operation, just as the Peters and Donald pump had pumped it out before, required no invention, and so undoubtedly Mr. Boyle and his solicitor thought when the original Boyle patent was applied for. In that application Boyle did not claim any such combination, but narrowed his claims to combinations including a peculiar tank, having an upper and lower compartment shown in all of the drawings filed, and enabling him to get a long wash with a short pull, allow foul air to escape, obtain an afterwash, and refill the bowl. It was not until Mr. Hanson's patent came

out that he first thought of patenting the bare idea of using an injector instead of the pump shown in the Peters and Donald patent. (Record, p. 67).

It was argued by the complainants' counsel in the court below, that, because there is a difference in the mode of operation of the two pumps, the substitution of one for the other required invention. But so far as the work done is concerned, except the measurement of water and stoppage of sewer gas, the two combinations are evidently designed to do and actually accomplish the same work, and the differences mentioned are in favor of the pump first used. So far as the application of the fall of the flushing water to operate the pumps is concerned, they are operated by the same motive power. That the water is differently applied in one case from the other and in one case falls from the chamber in the pump, and in the other directly through such a chamber, amounts to nothing, because that difference in application followed as a matter of course from the different natures of the two pumps.

There are various forms of water pumps operating in different ways, but any one knowing their nature knows that all can be used to pump water and can for that purpose be substituted for each other, and though the necessary connections differ in the different pumps any one knowing how to use them also knows how to make the requisite connections. So as to the Peters and Donald pump and the injector, though they may not operate exactly on the same principle, they are both operated by the fall of water from a source of supply to a bowl, and were well-known substitutes wherever a pump to be operated by the fall of water was needed.

In both closets the bowl is supplied with water, or flushed, and the contents sucked from it, in substantially the same way, and as a matter of fact the closets

sold by Huber & Co. in which the Peters & Donald form of pump is used are confessedly the best and sell for the most money. The defendant uses an injector because of its cheapness.

The complainants undertook to show by the testimony of Mr. Frazier that the form of pump adopted by Messrs. Peters & Donald and by the complainants in their best closet has various defects not possessed by the injector, and that therefore there was invention in substituting an injector for the other pump.

We answer, first, that where a mechanical device is old and its character, well known, it can not be monopolized by a mechanic who, without the exercise of more than ordinary mechanical skill in making connections, sets it to doing in a combination, just what it has done out of it, even though it does the work better than some other device previously used in that combination, and it has never been used in that combination before.

Pacific Ry. Co. vs. *Locomotive Truck Co.*, 110 U. S. 490.

We answer secondly, that as a matter of fact the only advantage possessed by an injector over the other pump, when used in a pneumatic closet, is cheapness, which is inherent in the device and always has been one of its characteristics.

The complainants' expert undertook to say that in the Peters and Donald closet the bowl is siphoned out before the water reached the bowl from the tank. *Complainants' counsel* said in one of his objections (Record, p. 235, Q. 22):

"If it is intended to show by this question and its answer that devices of the Boyle re-issue patent are less effective than the devices of the Peters and Donald patent in suit, it can not be shown by any such testimony, the proportions of the respective parts in each of said patents

relating to the washout not being given in either of said patents and the said patents not being limited to any particular proportion of the parts relating to the wash."

That objection applies to the attempt on Mr. Frazier's part to belittle the Peters and Donald closet. On cross-examination Mr. Frazier admitted that the same accumulation of water in the bowl would take place in the Peters and Donald closet as in the injector closets if the parts were proportioned to that end. We will quote from his examination:

"X-Q. 442. Then, if the Peters and Donald closet were constructed with a pipe so short as to allow the water to reach the bowl before that degree of rarefaction took place, a certain amount of accumulation would take place in the bowl before it began to siphon out, wouldn't it?

Ans. It would not before it began to siphon out, but it would before it was fully siphoned out." (Record, p. 253.)

The same pump used by Peters and Donald is used, as we have stated, by Huber in his best closet, and in that closet, invented, like the Peters and Donald, before the injector was adopted by Boyle, we find the overflow tube, the after-wash and all the virtues attributed by Mr. Frazier to the injector closets of the most complete type. We will quote from Mr. Frazier's testimony upon this point:

"X-Q. 443. Huber & Co. manfacture a closet which they call Tidal Wave No. 1, do they not?

Ans. Yes, sir.

X-Q. 444. That closet is constructed in accordance with letters patent No. 255485, granted to James E. Boyle, is it not?

Ans. It is constructed in substantial accordance therewith.

X-Q. 445. Is that an operative closet?

Ans. Yes, sir.

X-Q. 446. It is considered a good closet?

Ans. I believe so.

X-Q. 446½. Does it do its siphoning properly?

Ans. Yes.

X-Q. 447. Does it fill the bowl property afterwards, after the siphoning takes place?

Ans. Yes.

X-Q. In other words it is a good closet as compared with what you denominate the Trombe closet?

Ans. Yes.

X-Q. 449. Does it operate on the same principle as the Peters & Donald closet, so far as the creation of a vacuum is concerned?

Ans. On the same principle, yes.

X-Q. 450. The flow of water from he flushing tank sucks the air up through a pipe leading from the space between the two traps substantially as in the Peters & Donald closet, does it?

Ans. Yes, sir; substantially the same.

X-Q. 451. Have Huber & Co. sold these closets in competition with the others?

Ans. They have sold both kinds.

Q-X. 452. Both kinds during the same period?

Ans. Yes, I think you will find them both described in their catalogue.

X-Q. 453. They charge more for the closets constructed in accordance with these letters patent No. 255485?

Ans. My only knowledge of their charges is derived from their catalogue and statements to me, made in accordance therewith.

Q-X. 454. What is your knowledge as so derived?

Ans. My recollection is that they charge $50 for the Tidal Wave No. and 1, $37.50 for the Cascade or Trombe.

X-Q. 461. In such a closet as this, is there any more chance of the upper trap being left unsealed after an operation in what is called the Trombe tank, or a closet having the Trombe tank.

Ans. With the Tidal Wave No. 1 construction, the after-wash depends upon the length to which the vent tube 'g' in the patent Exhibit, No. 6, projects down into the flushing chamber 'F.' If this proportion be correct, to give the same after-wash as the Trombe it would be impossible to leave the upper trap unsealed with the Tidal Wave No. 1 construction, as with the Trombe construction; I am assuming, of course that the tube 'g' is large enough to let in air fast enough to give the proper after-wash (Record, pp. 253-256.)

X-Q. 259. (Record p. 100). As a matter of fact however, in the sale of these closets, the closet shown and described in patent 255,485, granted to Mr. Boyle, is the one which is considered the most satisfactory from a sanitary point of view and which is supplied where the most expensive closets are sold as a general rule, is it not?

Ans. The 'Tidal Wave No. 1' closets of Henry Huber & Co., which is a typical embodiment of the construction shown in patent 255,485, is a more expensive closet in its construction than those manufactured by them according to re-issued patent No. 10,826, and in my opinion is a little more perfect from a sanitary point of view than the latter class of closets, and I believe it is so considered generally by those persons competent to judge who have compared the two types of closets."

The Tombe tank, whose lower compartment gives the after-wash in the Huber injector closets, and permits foul gasses to escape to the outer air, is not used by defendant.

When Mr. Frazier tested The Peters and Donald closet he applied no test to see whether the joints were tight so as to enable it to work properly, a very necessary precaution, as a leak of air into the air exhaust pipe neutralizes the action of the pump.

Among the points which Mr. Frazier undertook to make against the Peters and Donald form of pump was that the vacuum chamber was liable to collapse unless very strong and heavy (Record, p. 148) and that in consequence the tank would be expensive, etc. A tank was put in evidence by complainant; made of wood and lined with sheet copper, whose vacuum chamber lining had collapsed when tested (Record p. 190, Q. 254). We do not consider the point important, but the attempt to make it, like Mr. Frazier's failure to test joints of the Peters and Donald closet with which he experimented, throws some light upon Mr. Frazier's testimony, for it became evident from his evidence on cross-examination, when examined in rebuttal, that the tank offered in evidence had been especially made for the purpose of deceiving the court. It then appeared that the complainants' best closet, Tidal Wave No. 1, is always made as it was sought to show they could not be constructed. We will quote from the testimony:

X-Q. 482. Of what material is the vacuum chamber in Tidal Wave No. 1 closet constructed?

Ans. In all the tanks that I have seen it is constructed of tinned copper, I believe--that is, a wooden box lined with copper.

X-Q. 483. Did you ever hear of one collapsing?

Ans. No further than that I have been told that Huber & Co. had difficulty with them on that account at first, and were compelled to fasten the copper to the wood at intervals in the vacuum chamber by driving tacks and soldering over their heads.

X-Q. 484. The same thing could be done in the Peters and Donald tank, such as shown in the Peters and Donald patent, couldn't it?

Ans. Yes, sir.

X-Q. 485. That would prevent collapsing in that case just as it does in the other, wouldn't it?

Ans. If a sufficient number of tacks were driven in to resist the collapsing tendency of the vacuum it would. (Record p. 259.)

(The "collapsed tank" did not have its lining tacked and of course it collapsed.)

Another objection to the Peters and Donald pump, made by Mr. Frazier, that the check valve—always a necessary part in that form of pump wherever it is used—is liable to get out of order. It has not proven so in practice, but, if it were so, that would make no difference; no inventor was required to discover that no check valve forms an element in an injector pump, though Mr. Boyle describes one in connection with his apparatus. (See Fig. 6.)

Still another objection made by the complainant's expert to the pump used in the complainant's best closet, is that such a pump does not operate equally well at different heights, while the operation of an injector cannot, he claims, be deranged so much by placing the tank at different heights. The Court will see at a glance, however, if the drawings of Boyle's patent No. 255,485 (Exhibits, p. 14) are examined, that the operation of the Peters and Donald pump, there shown, is not influenced in any way whatever by elevating or lowering the tank, because the only water creating a suction is the water in the vacuum chamber. The outer air, having free access to the space above and around the valve, the length of the flushing pipe is immaterial.

Mr. Peter White, who testified as a practical expert on behalf of the defendant, gave a Peters and Donald closet offered in evidence as defendant's Exhibit 14 (Record pp. 282-283, Qs. 7-10) a practical test of

several months' duration and found the pump in all respects as good and in some respects better than an injector.

We will quote from his testimony:

"Q. 20. What is your opinion, as one conversant with all manner of water-closets, concerning the operativeness and other desirable qualities.

(The witness was testifying with reference to the Peters and Donald closet.)

A. It is the best pneumatic closet I have ever seen, covering all points which the latest improvements in water-closets claim to cover, especially preventing sewer gass (entering) into the room.

Q. 21. Please examine complainants' exhibit marked 'Complainants' Exhibit Trombe Tank." State whether you (ever) saw a closet having a bowl and traps substantially like the one shown in the Peters and Donald patent you have in your hand and having the tank fixtures connected therewith like that one.

A. Yes, sir; I have.

Q. 22. Will you please state whether or not the wash in the Peters and Donald closet is as thorough and continuous as the closet in which the Trombe Tank is used, similar to the one marked 'Complainants' Exhibit Trombe Tank' "?

A. Yes.

Q. 23. State the character of the suction and its strength in the closets constructed like the Peters & Donald closet.

A. The suction in the Peters and Donald closet produced by the flushing chamber or aspirator principle through a flushing chamber is stronger than that of an injector, for the reason during its action there being nothing in the way of allowing the suction of air freely from the air space in passage 4 into the flushing chamber.

Q. 24. State how a closet constructed in accordance with the Peters and Donald patent, which you have in your hand, No. 260,232, operates with regard to quickness, in creating the suction and cleansing the bowl.

A. Siphon action is created immediately as the water passes into the flushing pipe which leads to the bowl.

Q. 25. In practice, how high is the tank placed in the tank closets above the bowl, as a general rule?

A. From six to seven feet from the top of the bowl to the bottom of the tank.

Q. 26. Do you know from actual experience and observation, whether a closet constructed in accordance with letters patent 260,232, which you have in your hand, and having the bottom of the tank placed seven feet above the top of the bowl, would operate perfectly and thoroughly in all respects; if so, state what the facts are?

A. Yes, sir; it is a little stronger suction at seven feet than it would be at six.

Q. 27. Between what limits have you known a closet of this kind to operate?

A. I have operated it with four feet from the top of the bowl to the bottom of the tank; also as high as eight feet three from the top of the bowl to the bottom of the tank, and found it to work perfectly at the different heights.

Q. 28. State whether or not a closet constructed in accordance with complainants' Exhibit 1, which I have referred to as the Peters and Donald patent, is or is not liable to get out of order, and what your experience has been, if you have had any?

A. It is perfectly simple and is less liable to get out of order than an injector, and the fact that the valve mechanism in the flushing apparatus being of the simplest kind as have proven themselves in wear in the past.

Q. 29. How long have you known closets constructed in accordance with the specification marked complainants' Exhibit 1, to be used?

A. Since about the middle of last February until this morning, when it was taken down and brought here as an exhibit.

Q. 30. Did it ever get out of order during that time!

A. No, sir.

Q. 31. Did it work at the end of this time as well as it did at the beginning?

A. Yes, sir. (Record pp. 285-286.)

Professor Morton, testifying on behalf of the complainants, admitted that the flushing action of the Peters and Donald closet, marked Defendant's Exhibit 14, was "efficient" (Record, p. 170, 2148).

We think it clear from the evidence of these two witnesses, that the injector pump does simply a part of what the other pump used by Peters and Donald and Boyle had previously done, and that its only advantage in a pneumatic closet over the other form of pump is the advantage of cheapness, which it possesses everywhere.

The use of an injector in a water-closet is strictly analogous to its use elsewhere; it had been used to pump air before, just as it is there. It had been used to pump air and water before, just as it pumps it there. It does nothing in the combination it had not done be-

fore. It required no experiment to ascertain that it would work, and no more than common mechanical ability to substitute it for the pump previously used. We therefore submit that this application of an injector falls directly within the established principle that the application of an old process, machine or device to a like or analogous purpose, with no change in the mode of application requiring invention, and no result substantially different in its nature, will not sustain a patent.

We submit that the substitution of the old injector pump for the pump shown in the Peters and Donald patent and the first Boyle patent, was no more a patentable invention, than the substitution of driving belts for cog gearing for communicating motion to the rollers of grinding mills (*Consolidated Roller Mill Co.* vs. *Walker*, 138 U. S. 124); the substitution of an old return-flue boiler for a direct flue boiler in a combination composed of a straw burning device and a boiler of the latter class (*Heald* vs. *Rice*, 104 U. S. 737); the substitution of an old capstan for an old windlass (*Morris* vs. *McMillin*, 112 U. S. 244); the use of a reflector in combination with a head-light and fare box to do what reflectors had long done in other combinations (*Slawson* vs. *Grand St. R. Co.*, 107 U. S. 649); or the use under a locomotive of an old truck previously used under cars, (*Pacific Ry. Co.* vs. *Locomotive Truck Co.*, 110 U. S. 490).

THE BOYLE REISSUE—NO INADVERTENCE, ACCIDENT OR MISTAKE.—CLAIMS 1 AND 2 NOT FOR ALLEGED INVENTION ORIGINALLY DESCRIBED AND CLAIMED—BROADENED CLAIMS SUGGESTED BY LATER PATENT AND DESIGNED TO COVER CONSTRUCTION THEREIN SHOWN.

It is not contended that defendant infringes any save the first two claims of the Boyle re-issue. These read as follows:

"1. A water-closet consisting of a bowl with the soil passage leading therefrom and two successive traps in said passage, in combination with a flushing-pipe for conveying water to the bowl, a suction injector arranged in connection with said pipe and to be traversed by the flushing-water, and an airpipe leading from the air space between said traps and communicating with said injector, substantially as set forth, whereby the flow of water through said injector serves to draw air from said air space.

"2. A flushing apparatus for water-closets, consisting of the combination of a reservoir tank, a flushing-valve controlling the outlet thereof, a flushing-pipe for conveying water therefrom to the bowl of the closet, a suction injector arranged in connection with said pipe and to be traversed by the descending flushing water, and a suction-pipe in connection with said injector, whereby the water, in flowing from said tank downward through the flushing-pipe, traverses said injector and sucks the the air from said suction-pipe."

Now, each of these claims have been expanded so as to make them cover subject matter different from either of the alleged improvements originally described or claimed; but for such expansion no one would assert that defendant's construction infringed them. All flushing apparatus made by defendant omitted the flushing-chamber F. This chamber is made an essential element in the original specifications and drawings, and constituted one of the chief elements in each of the six claims of the original patent.

That such chamber was regarded an essential element when Boyle applied for and obtained his original patent is manifest from every part of the specification, every figure of the drawings and every claim. It will be seen by the patent that there are six figures composing his drawings, in both his original and re-issued patent and that the flushing-chamber is clearly shown in each figure as an important and essential element. No one could infer from examining these figures that the flushing-chamber F could possiby be dispensed with in the construction Boyle patented. It is incredible that the idea was in his mind of constructing the flushing apparatus described in his original specification without the use of tank E and flushing-chamher F, being both used together in each flushing apparatus.

Boyle says his invention "has for its principal object to cheapen and to simplify the overhead flushing apparatus." Now, if the idea of constructing the apparatus without the flushing-chamber F had occurred to his mind, assuredly he would have illustrated in one of the figures for such a construction, since the principal object was to cheapen and simplify the construction, and the omission of such flushing-chamber would tend to accomplish both of these objects. Yet, as we have said,

the figures do not indicate the possibility of a construction without the flushing apparatus. Indeed, they contradict the possibility of such a thing.

Careful reading of the original specification conclusively shows that the flushing apparatus invented by Boyle, if he invented anything, was constructed with the tank E and flushing-chamber F. There are six columns of the specifications, and in every column and nearly every paragraph the uses and functions of this flushing-chamber are emphasized. Thus, in the first column he says: "*F is the flushing-chamber*, *l* the flushing-pipe leading down from the bottom of this *chamber* to the flushing-rim *k* of the bowl, and *e* the airpipe or suction-pipe leading from the air space *d* to the top of *chamber F*." Again, he says: "*The chamber F* is arranged wholly below the tank E, with the exception of an upward extension through the tank formed by tube F,' to the top of which the ventpipe *f* is connected." Again, he says: "The suction-pipe *e* rises through the *chamber F*, inside the tube F." * * *

In the second column he says, in speaking of pipe *r*: "The upper end of which is open and extends preferably above the water level in the tank E, but not so high as the top of the pipe *e*, and the bottom of which extends through the bottom of *chamber F*, and connects with a passage-way, *s*, formed in a casting G, which is fastened beneath the *chamber*. This casting extends to the right and the outlet orifice *i*, at the bottom of the *chamber* opens into it. Beneath this orifice the flushing pipe *l*, is connected to the casting G. The orifice *i* is surrounded with a pendent or short downwardly projecting tube which depends into the casting G, and this orifice and casting, in connection with the flushing-pipe *l* form a suction injector I, the operation of which causes a suction through the

passage (lettered *t*) formed by the tube *r* and passage-way *s*." Again, he says: "There is but one valve—the flushing-valve *h*—which closes the inlet opening *h'* *to the chamber F*. This opening should be about three inches in diameter, and the outlet orifice *i* should be about three-fourths or seven-eights of an inch in diameter." Again, he says: "In my present invention the *flushing chamber* is not sealed, and consequently is not a vacuum chamber, and the suction is produced by the action of the injector I."

In the third column he says: "The parts are shown in Fig, 1 in their normal condition, *the chamber F* being empty and the valve *h* closed. When the person using the closet pulls down on the wire or chain *q*, through the usual pull handle or other suitable appliance, the valve *h* is lifted, and the water from the tank E commences to flow rapidly into *the chamber F*, and immediately thereafter to flow outward through the orifice *i*."

Again, he says: "As the inlet orifice *h*, has about sixteen times the area of the outlet orifice *i*, the water enters *the chamber F* much more rapidly than it can escape from it and quickly fills *the chamber*, expelling the air through the tube *F"* and pipe *f*. By the time *the chamber* is thus filled the water running out through the orifice *i*, and descending the flushing-pipe will commence to flow into the bowl *A*, and the user hearing it will naturally release the pull, whereupon the valve *h* will drop back to its seat. The water contained in the *flushing-chamber* will then continue to flow out through the orifice *i* until the chamber is emptied."

Again, he says: "From the time the water entering the *chamber* reaches the orifice *i* until the chamber is emptied there is a continuous stream of water flowing

out through this orifice, falling through the cavity or injector chamber in the casting *G* and flowing down the flushing-pipe."

And he says: "This partial vacuum or suction extends up through the passage *t* into the bell *n*, from which it draws the air for an instant, and until the water in *the chamber F* rises above the bottom end of this bell, and so seals it and prevents any further flow of air into it."

Again, he says: "In any case the rarefaction in the bell *n* will cause the water to rise to a greater height in it than in the *chamber F*, as shown in Fig. 3."

And in the fourth column he says: "Thus the water will be drawn from the *chamber F* to the pipe *l*, through two conduits simultaneously. The rarefaction in the bell *n*, pipe *c*, and space *d* will continue until the water in *the chamber* has so far run out as to unseal the bottom of the bell."

Again, in speaking of siphoning the air space between the traps and the after-wash, he says: "The precise operation will depend upon the proportioning of the parts, as by altering the relative capacities of the trap *C*, space *c*, pipe *e*, bell *n*, passage *t*, and chamber *F*, and the relative areas of the orifices *h*' and *i*, the operation might be considerably modified."

Again, he says: "I have stated that the person using the closet will naturally release the pull when he hears the water pouring into the bowl, and if the parts are so proportioned that when this occurs the *chamber F* will be filled, the operation will almost invariably be satisfactory."

Again, he says: "The adjustment should be such that the valve will seat itself as soon as the *chamber F* is filled."

At page 3, lines 16–40, he says, with reference to the construction shown in fig. 5:

"The parts are shown in their normal position. When the seat is depressed the valve *j* is seated and *h* is lifted. The *chamber F* is quickly filled through the orifice *h'* and water flows thence into the bell *n*, the air therein escaping through the valve *g*. Water also flows through the annular opening *i* and fills the passage *t* to the same level. The *chamber F*, bell *n*, passage *t*, remain full until the seat is released, whereupon the valve *h* closes and the valve *j* opens. The water from the passage *t* and *chamber F* then commences to run out into the pipe *l*, the former flowing the more rapidly, and instantly producing a suction, which should suffice to lift the water in the bell *n* and cause it to flow down the passage *t*. The water from the *chamber F* flows out through the annular orifice *i*, and descends through the flushing-pipe, and acts to cause a suction or rarefaction in the same manner as Fig. 1. This construction causes a more powerful and rapid suction than the other, but I prefer that first described because of its greater cheapness, as its action is practically sufficient."

Again, he says, at page 3, lines 59–72 of original, see also page 3, lines 54, etc., of re-issue.

"The diagram, Fig. 6, is designed to illustrate the essential principle of my present invention even more clearly than the preceding figures. The air pipe *e* does not enter the *chamber F*, but is connected by a branch with the flushing-pipe *l* below the *chamber*, the injector I being arranged at their junction. The valve *g* is shown merely to prevent water setting back and flowing down the pipe *e*, since the top of this pipe is below the water level *xx*, instead of above it, as before. No provision for securing an after-wash is here shown,

but the bowl may be refilled after the flushing by any suitable means, as by water admitted by a valve through an independent flushing-pipe."

Now, it will be observed, that there is no element in all this specification which is talked about as much as *chamber F*, and there is not the slightest intimation that Boyle's alleged invention or combinations could be made into a flushing apparatus without such chamber.

He says:

"It will be seen that my present invention introduces a new principle for operating double-trapped or siphon water-closets, namely, that of producing the requisite vacuum by causing the falling flushing water to act as an injector and draw air along with it."

Now, Boyle says: "My present invention introduces a new principle for operating double-trapped or siphon water-closets," nevertheless the principle of sucking air with an injector was old, and so. too, was the idea of operating a pump empting the bowl by the fall of flushing water as appears by the evidence. Consequently, Boyle at best was entitled, if entitled to claim anything, to the particular combination of devices described in his original specifications and shown in his drawings, by which the injector could be practically used with flushing apparatus for water-closets. He was not entitled to a claim for the principle of pumping out a water-clost bowl with an old pump nor did he ask for one in his orlginal patent.

In Fuller v. Yentzer, 4 Otto (94 U. S.) 288, the court says:

"*Patents for a machine will not be sustained if the claim is for a result, the established rule being that the invention, if any, within the meaning of the patent act, consists in the means or apparatus by which the result is obtained, and not merely in the mode of operation, inde-*

pendent of the mechanical device employed; nor will a patent be held valid for a principle, or for an idea, or any other mere abstraction."

In Burr v. Duryee, 1 Wall. 551, it is said: "Where the claim immediately follows the description of the invention, it may be construed in connection with the explanations given in the description, and if the claim contains words referring back to the specifications, it can not properly be construed in any other way."

In Railway v. Saylor, 7 Otto, 561, being a suit founded on a patent having a claim for operating old brakes from either end of the car by the combination of levers which would produce that result, the Court says: "But their construction and use, though with limited success, are sufficient to show that Thompson and Bacheldor are not the pioneers in this field of improvement, and that they were not the originators of the double brake nor of the use of rods, chains and similar appliances for connecting the brake system of two trucks under a car. *They invented a particular apparatus for doing the desired work, and they can only claim their particular apparatus or that which is substantially the same.*"

In Burr v. Duryee, 1 Wallace, p. 570, the Court says: "*A machine is a concrete thing, consisting of parts of a certain device or combination of devices. The principle of the machine is properly defined to be its mode of operation or that peculiar combination of devices which distinguishes it from other machines. A machine is not a principle or an idea.* The use of ill-defined phraseology is the frequent cause of error; it requires no great ingenuity to mistify a subject by the use of abstract terms of indefinite or equivocal meaning. *Because the law requires a patentee to explain the mode of operation of his peculiar machine*

which distinguishes it from others, it does not authorize a patent for a "mode of operation as exhibited in the machine."

In Reckendorfer v. Faber, 91 U. S. 357, the Court says: "The combination to be patentable must produce a different force or effect, or result in the combined forces or process from that given by their separate parts; there must be a new result produced by their union; if not so, it is only an aggregation of separate elements."

In Prouty v. Ruggles, 16 Peters, 341, the Court says: "The patent is for the combination, and the improvement consists in arranging different portions of the plow and combining them together in the manner stated in the specifications, for the purpose of producing a certain effect. *None of the parts referred to are new and none are claimed as new, nor is any portion of the combination less than the whole claimed as new or stated to produce any given result. The end in view is proposed to be accomplished by the union of all, arranged and combined together in the manner described, and this combination, composed of all the parts mentioned in the specifications, and arranged with reference to each other and to other parts of the plow in the manner herein described, is stated to be the improvement, and is the thing patented. The use of any two of these parts only, or of two combined with a third, which is substantially different in form or in the manner of its arrangement and connection with the others, is therefore not the thing patented.* It is not the same combination if substantially different from it in all parts. The jogging of the standard into the beam and its extension backward from the bolt, are both treated by the plaintiffs as essential parts of their combination, for the purpose of brace and draft. Consequently the use of either alone by the defendants would not be the same improvement, nor infringe the patent of the plaintiffs."

In Brooks v. Fiske. 15 Howard, 219, the Court says: "In view of this state of affairs, the rule is that if a combination has, as here, three different known parts, and the result is proposed to be accomplished by the union of all the parts arranged with reference to each other, the use of two of these parts only, combined with the third, which is substantially different in the manner of its arrangement and connection with the others, is not the same combination, and no infringement."

In Water-meter Company v. Desper, 101 U. S., 335, the court says: "The combination here claimed consists of five parts or elements, namely: 1st, the rotary valve; 2d, the two cylinders; 3d, the double-acting pistons connected by a rod having a cam slot at right-angles with the length of the rod; 4th, the adjusting stops; 5th, the crank with its pinions and cranks, by means of which rotary motion is imparted from the piston to the valve. * * * * It is a well-known doctrine of patent law that the claim of a combination is not infringed if any of the material parts of a combination are omitted. It is equally well known that if any one of the parts is only formally omitted, and it is supplied by a mechanical equivalent, performing the same office and producing the same result, the patent is infringed. The first question, therefore, is whether the defendants infringed the claim referred to —whether they do, in fact, in their water-meters, use all the parts of the combination above specified." And in the same case, at page 337, the Court says: "*Our law requires the patentee to specify particularly what he claims to be new, and if he claims a combination of certain elements or parts, we can not declare that any one of these elements is immaterial. The patentee makes them all material by the restricted form of his claim.*"

Comparison of the Claims of the Original and Re-issue.

Now, as we have already stated, every one of the six claims of the original patent are combination claims, and in every one of them the flushing-chamber F forms an important elememt.

Comparing the claims of the Boyle re-issued patent with those of the original, it will be found that claim 6 of the re-issue is in all respects identical with claim 5 of the original patent; that claim 5 of the re-issue is identical in all respects with claim 4 of the original; that claim 3 of the re-issue is substantially the same as claim 4 of the original; that claim 4 of the re-issue is in some respects similar to claim 3 of the original patent, but it omits the flushing-chamber F, and mentions a flushing-valve in its place, thus making a different combination. But neither the original specifications or claims corresponds with or in the slightest degree suggest the first two claims of the re-issue, and, as before stated, these are the only ones alleged to be infringed by defendant.

Comparing the last paragraph of the specification of the Boyle original, No. 291,139, with the last paragraph of the re-issue, No. 10,826, it will be observed that "*new matter*" has been inserted, for the obvious purpose of laying a basis for the expanded claims which it is alleged the defendant infringes. In the left-hand column we print this paragraph of the original patent verbatim, and in the right-hand column the corresponding paragraph of the re-issue, and for convenience print the added "*new matter*" in italics.

OLD SPECIFICATION.

The diagram, Fig. 6, is designed to illustrate the essential principle of my present invention even more clearly than the preceding figures. The air pipe *e* does not enter the chamber F, but is connected by a branch with the flushing-pipe *l* below the chamber, the injector I being arranged at their junction. The valve *g* is shown merely to prevent water setting back and flowing down the pipe *e*, since the top of this pipe is below the water level *x x*, instead of above it, as before. No provision for securing an after-wash is here shown, but the bowl may be refilled after the flushing by any suitable means, as by water admitted by a valve through an independent flushing-pipe.

NEW SPECIFICATION.

The diagram, Fig. 6, is designed to illustrate the essential principle of my present invention even more clearly than the preceding figures. The air pipe *e* does not enter the chamber F, but is connected by a branch with the flushing-pipe *l* below the chamber, the injector I being arranged at their junction. The *check* valve *g* is shown merely to prevent water setting back and flowing down the pipe *e*, since the top of this pipe is below the water level *x x*, instead of above it, as before. *When the flushing valve h is lifted the water from the tank E flows down the flushing-pipe l and through the injector I, thus drawing air from the pipe e during the whole time that the water continues to flow through the injector. In this construction the chamber F has no function of its own, and constitutes essentially a mere enlargement of the upper portion of the flushing-pipe,*

to the same effect as the ordinary "service-box" commonly used by plumbers. No provision for securing an after-wash is here shown, but the bowl may be refilled after the flushing by any suitable means —as, *for instance, by water admitted by a valve through an independent flushing-pipe, as shown in the patent of Peters and Donald, No. 260232, dated June 27, 1882.*

And for like convenience of comparison we print below, in parallel columns, the claims of the original patent, No. 291139, and the re-issue, No. 10826.

Claims of Original.	Claims of Re-issue.
I claim as my invention—	I claim as my invention—
1. A flushing apparatus for water-closets, consisting of a reservoir tank, a flushing-chamber adapted to be filled therefrom, a valve controlling the admission of water from said tank to said chamber, a suction injector arranged beneath the outlet from said chamber, a flushing-pipe leading from said injector, and a suction or air pipe commu-	1. A water-closet consisting of a bowl, with the soil passage leading therefrom and two successive traps in said passage, in combination with a flushing-pipe for conveying water to the bowl, a suction injector arranged in connection with said pipe and to be traversed by the flushing water and an air pipe leading from the air

nicating with said injector, all combined and arranged substantially as set forth, whereby the water in escaping from said chamber into the flushing-pipe traverses said injector, and sucks the air from said suction-pipe.

2. The combination of a reservoir tank, a flushing-chamber, a valve controlling the admission of water from said tank to said chamber, a suction-pipe terminating at the upper part of said chamber, an injector beneath the outlet from said chamber, a flushing-pipe leading downward from said injector, and a suction-passage affording communication from said injector to said suction-pipe, substantially as and for the purposes set forth.

3. A flushing apparatus for water-closets, consisting of a reservoir tank, a flushing-chamber, a valve controlling the admission of water from said tank to said chamber, a suction injector beneath the outlet from said chamber, a suction-pipe terminating at the upper part of said chamber, an injector beneath the outlet from said chamber, a flushing-pipe leading downward from said injector, and a suction-passage affording communication from said injector to said suction-pipe, substantially as and for the purposes set forth.

2. A flushing apparatus for water-closets, consisting of the combination of a reservoir tank, a flushing-valve controlling the outlet thereof, a flushing-pipe for conveying water therefrom to the bowl of the closet, a suction injector arranged in connection with said pipe and to be traversed by the descending flushing-water, and a suction-pipe in connection with said injector, whereby the water in flowing from said tank downward through the flushing-pipe traverses said injector and sucks the air from said suction-pipe.

3. The combination of a reservoir tank, a flushing-chamber, a valve controlling the admission of water from said tank to said chamber, a *suction-pipe* communicating with the interior of said chamber, an

ber, a flushing-pipe leading downward from said injector, a suction or air pipe opening into the upper part of said chamber, and a suction passage extending from said pipe to said injector, whereby the passage of water through said injector into the flushing-pipe will develop a suction in said suction passage and suction-pipe, in combination with means, substantially as described, for admitting air to said suction passage or pipe, and so breaking the vacuum therein before all the water has escaped from the chamber, whereby an after-wash is secured, all combined and arranged to operate substantially as set forth.

4. In combination, the tank *E*, the chamber *F*, provided with inlet orifice *h'* and outlet orifice *i*, the valve *h*, the suction-injector *I*, the flushing-pipe *l*, the air pipe *e*, the suction passage *t*, and the air bell *n*, substantially as set forth.

5. A flushing apparatus for a water-closet, consisting of a reservoir tank, a flushing-valve controlling the outlet thereof, a *flushing-pipe* for conveying water therefrom to the bowl of the closet, a suction-injector arranged in connection with said pipe, and to be traversed by the descending flushing-water, and a suction-pipe in connection with said injector, whereby the passage of water through said injector will suck the air from said suction-pipe, all combined together, and with a trapped air passage communicating with said suction-pipe and arranged to be unsealed and thereby to admit air to the suction-pipe and break the vacuum therein *before*

ing of the combination of a reservoir tank, a flushing-chamber provided with an inlet orifice of large area communicating with said tank, and with an outlet orifice of contracted area proportioned to the area of said inlet orifice, substantially as specified, a valve adapted to close said inlet orifice, an air pipe opening into said flushing-chamber, and a flushing-pipe leading from said outlet orifice, all arranged and adapted to operate substantially as set forth.

6. The combination with tank *E* and chamber *F*, of the valve *h*, thereof, its stem consisting of an overflow tube *m* and a sealing cup *m'* below the valve, in which cup the lower end of the overflow tube is immersed, substantially as set forth.

the cessation of the flow of flushing-water, substantially as set forth.

5. The combination of the tank *E*, the chamber *F*, provided with inlet orifice *h'* and outlet orifice *i*, the valve *h*, the suction injector *I*, the flushing-pipe *I*, the air pipe *e*, the suction-passage *t*, and the air bell *n*, substantially as set forth.

6. A flushing apparatus for a water-closet, consisting of the combination of a reservoir tank, a flushing-chamber provided with an inlet orifice of large area, communicating with said tank and with an outlet orifice of contracted area proportioned to the area of said inlet orifice, substantially as specified, a valve adapted to close said inlet orifice, an air pipe opening into said flushing-chamber, and a flushing-pipe leading from said outlet orifice, all arranged and adapted to operate substantially as set forth.

Thus, it will be seen that in the paragraph of the re-issue specfication, quoted, the following language is embraced in the re-issue, not embraced in the original. The word "*check*" preceding valve "g." Also the words "*when the flushing-valve h is lifted the water from the tank E flows down the flushing-pipe l and through the injector 1, thus drawing air from the pipe e during the whole time that the water continues to flow through the injector. In this construction the chamber F has no function of its own, and constitutes, essentially, a mere enlargement of the upper portion of the flushing-pipe, to the same effect as the ordinary 'service-box' commonly used by plumbers.*" Also the following: "*As for instance, by water admitted by a valve through an independent flushing-pipe, as shown in the patent of Peters and Donald, No. 26,023 2, dated June 27, 1882.*"

In the original patent the flushing *chamber F*, as we have already seen, forms a part of each and every claim, and the specifications in every paragraph enlarge upon and emphasize its functions; and though in the re-issue it formed an element in every combination claimed except one, two and four; yet here, in the amendment of the original specifications, Mr. Boyle has seen fit to say, "*the chamber F has no function of its own, and constitutes, essentially, a mere enlargement of the upper portion of the flushing-pipe, to the same effect as the ordinary service-box commonly used by plumbers.*" Now, why does he say this? Why interpolate this new matter into the specifications? Why attempt to belittle one of the most prominent and, as he obviously thought, most essential elements in each and all of the combinations of his original patents? The answer is made manifest by the evidence.

Under date of June 12, 1883, Frank B. Hanson applied for letters patent for a flushing apparatus, and was

granted the same November 25, 1884, being No. 308,358, put in evidence by complainants as Exhibit No. 12. This application for a patent was pending in the Patent-Office for more than six months before the Boyle original 291,139 was granted, and this Hanson patent shows a flushing apparatus wherein the injector principle is used for exhausting the air in the confined space between the two water traps, by the use of one tank containing water for flushing the basin. Not until Hanson patent was granted did the idea dawn upon the mind of Boyle of applylng for a re-issue, and obtaining, as his invention, such a construction as had been patented to Hanson. To accomplish this end, it was manifest that his specifications should be so amended, as to do away with the idea that the flushing *chamber F* was of any value, though emphasized in every paragraph of his specifications and illustrated in every figure of his drawings, and vigorously claimed in every claim of his original patent as one of the elements constituting his combinations for which his patent was granted.

We are unable to perceive how any man, reading the original specifications, examining the drawing, and reading the claims of the Boyle original, could possibly have reached the conclusion that "*chamber F* had no function of its own," or that such an idea was in the mind of Boyle when he applied for his original invention.

Whether *chamber F* had any function of its own independent of other parts is not the vital question. The vital question is as Boyle wrote his specifications, as he made his drawings, and as he formulated his claims, did he not make it one of the essential elements of his invention? We confess that we are unable to perceive how any person can say that he did not.

It is manifest that there is nothing in the original specification 291,139, in the drawings thereof, or in the claim suggesting or intimating any such a combination as claimed in claims 1, 2, and 4, of the re-issued patent. There is nothing which, by any fair construction or interpretation of the original specifications, drawings or claims, can suggest to any man the possibility of forming a combination to operate the Boyle invention by omitting the flushing *chamber F.*

Construction of Combination Claims.

Every part of the combination claimed is conclusively presumed to be material to the combination, and no evidence to the contrary is admissible in any case of alleged infringement. The patentee makes all parts of a combination material when he claims them in combination and not separately.

In Water-meter Co. v. Desper, 101 U. S. 332, Justice Bradley, in writing the opinion of the court, says: "Our law requires the patentee to specify particularly what he claims to be new, and if he claims a combination of certain elements or parts, we can not declare that one of these elements is immaterial. The patentee makes them all material by the restricted form of his claim."

To the same effect is:

Eames v. Godfrey, 1 Wall. 78;
Chase v. Brown, 2 Wall. 320;
Fuller v. Yentzer, 94 U. S. 296-297;
Gould v. Rees, 15 Wall. 194.

In Parker & Whipple Co. v. Yale Clock Co., 123 U. S. 87, it will be observed that all the claims in the original patent were combination claims, and it will also be observed that the first eight claims of the re-

issued patent, which were held by the court to be void, were claims differing from the combinations in the original patent, and whatever language was used by the court in its denunciation of expanding claims in the re-issue, beyond what the drawings and specifications indicated, was said with reference to combination claims. Moreover, it is manifest that the same doctine applicable to the expansion of claims which were not combination claims, under the decisions we have cited, applied with equal force to the expansion of combination claims. And where the claim is made up of old elements put in combination, the invention consists simply and only in forming such combination. Now, the omission of one or more of the elements constituting such combination broadens the invention, giving it a wider scope than to continue all of the original elements in the combination. This is precisely what Boyle did in his re-issue, and for this reason claims 1 and 2 of said re-issue are utterly null and void. The Commissioner of Patents exceeds his authority in granting said claims.

No new combinations not described in the original specifications nor indicated in the drawings or model can be claimed in a re-issue.

Under this point we can not present the reasons more forcibly than by first quoting from decisions of this Court where that identical question was at issue.

In Parker & Whipple Co. v. Yale Clock Co., 123 U. S. 87, the question involved was, whether the claims of the re-issued letters patent were broader than the original warranted, and the court in writing the opinion refers to the various decisions bearing upon the question, where it has been asserted that the claims in the re-issued patent were broader than justified by the original patent, and in substance stated: "What was suggested

or indicated in the original specifications, drawings or patent-office model is not to be considered as a part of the invention intended to have been covered by the original patent, unless it can be seen from the comparison of the two patents that the invention which the original patent was intended to cover embraced the things thus suggested or indicated in the original specifications, drawings or patent-office model, and unless the original specifications indicated that those things were embraced in the invention intended to have been secured by the original patent." "In this case the original patent was amended so as to cover improvements not covered by it, and which came into use by others than the patentee free from the protection of the patent; and there is no evidence of any attempt to secure by the original patent the inventions covered by the first eight claims of the re-issue; and those inventions must be regarded as having been abandoned or waived, so far as the re-issue is concerned." In that case the original patent was granted November 4, 1879, and application for a re-issue was filed a little over a year thereafter. So the question of the statute of limitation cuts no figure whatever in considering the question then before the court.

In Burr v. Duryee, 1 Wall. 531-7, at the December Term, 1863, this court, speaking by Justice Grier, said: 'The surrender of valid patents and the granting of re-issued patents thereafter, with expanded or equivocal claims, where the original was clearly neither inoperative nor invalid and whose specification is neither defective nor insufficient, is a great abuse of the privilege granted by the statute, and productive of great injury to the public. This privilege was not given to the patentee nor his assignee in order that the patent may be rendered more elastic or expansive for the suppression of all other inventions.' "

"In Seymour v. Osborne, 11 Wall. 516, the Court says: "Re-issued letters patent must by the express words of the section authorizing the same be for the same invention, and consequently where it appears on a comparison of the two instruments as a matter of law, that the re-issued patent is not for the same invention as that embraced and secured in the original patent, the re-issued patent is invalid, as that state of facts shows that the commissioner in granting the new patent exceeded his jurisdiction. * * * Interpolations of new features, ingredient or devices, which were neither described, suggested nor indicated in the original patent or patent-office model, are not allowed, as it is clear that the commissioner has no jurisdiction to grant a re-issue unless it be for the same invention as that embodied in the original letters patent, which necessarily excludes the right on such an application to open the case to new parol testimony, and a new bearing as to the nature and extent of the improvement. * * * Letters patent re-issued for an invention substantially different from that embodied in the patent are void and of no effect, and no jurisdiction to grant such a patent is conferred by an act of Congress upon the commissioner, and he possesses no power in that behalf except what the acts of Congress confer. Whether a re-issued patent is for the same invention as that embodied in the original patent or for a different one, is a question for the court in equity suits."

In Parker et al., v. Yale Clock Co., 123, U. S., 98, the court, after approving of these quotations to their fullest extent, says: "In these extracts from the opinion it is seen that the court adheres strictly to the view that under the statute the commissioner has no jurisdiction to grant a re-issued patent for an invention substantially

different from that embodied in the original patent, and that a re-issue granted not in accordance with that rule is void. * * *

"In what was thus said in Seymour v. Osborn, there is no warrant for the view that, *ex vi termini*, what was suggested or indicated in the original specifications, drawings or patent-office model is to be considered as a part of the invention intended to have been covered by the original patent, unless the Court can see from a comparison of the two patents that the invention which the original patent was intended to cover, fairly embraced the things thus suggested or indicated in the original specifications, drawings or patent-office model, and unless the original specification indicated that those things were embraced in the invention intended to have been secured by the original patent."

The recent enactment referred to in Seymour v. Osborn is found in Section 53 of the act of July 8, 1870, in these words: "But no new matter shall be introduced into the specification, nor in case of a machine patent shall the model or drawings be amended except each by the other; but when there is neither model nor drawing, amendments may be made upon proof satisfactory to the commissioner that such new matter or amendment was a part of the original invention and was omitted from the specification by inadvertence, accident or mistake as aforesaid."

This provision is now found in the same words in Section 4916 of the R. S.

The case of Gill v. Wells, 22 Wall. 1, at the October term, 1874, arose under the act of 1836; in that case this court, speaking by Justice Clifford, said, p. 19: "Invalid and inoperative patents may be surrendered and re-issued for the same invention, but Congress never intended that a patent which was valid and operative

should be re-issued merely to afford the patentee the opportunity to expand the exclusive privileges which it secures to enable him to suppress subsequent improvements which do not conflict with the invention described in the surrendered patent. Evidence of a decisive character to negative the theory that such a practice finds any support in the act of Congress, besides what existed before, is found in the new patent act (the act of of July 8, 1860, Section 53), which expressly provides "that no new matter shall be introduced into the specification; and, in case of a machine patent, that neither the model nor the drawing shall be amended, except each by the other."

In the case of Powder Co. v. Powder Works, 98 U. S. 126, at October term, 1878, this court, speaking by Mr. Justice Bradley, said, p. 137, in reference to the re-issued letters in that case: "These re-issues being granted in 1872, were subject to the law as it then stood, being the act of July 8, 1870, 53d section, of which (reproduced in Section 4916 of the Revised Statutes), relates to the matter in question. It seems to us impossible to read this section carefully without coming to a conclusion that a re-issue can only be granted for the same invention which formed the subject of the original patent of which it is a re-issue. The express words of the act are, 'a new patent for the same invention'; and these words are copied from the act of 1836, which in this respect was substantially the same as the act of 1870. The specification may be amended so as to make it more clear and distinct; the claim may be modified so as to make it more conformable to the exact rights of the patentee, but the invention must be the same. So particular is the law on this subject, that it is declared that 'no new matter shall be introduced into the specification.' *This prohibition is general,*

relating to all patents, and by 'new matter' was supposed to be meant new substantive matter, such as would have the effect of changing the invention, or of introducing what might be the subject of another application for a patent. The danger to be provided against was the temptation to amend the patent, so as to cover improvements which might have come into use, or might have been invented by others after its issue."

The Legislature was willing to concede to the patentee the right to amend his specification so as fully to describe and claim the very invention attempted to be secured by his original patent, and which was not fully secured thereby in consequence of inadvertence, accident or mistake, *but was not willing to give him the right to patch up his patent by the addition of other inventions, which, though they might be his, has not been applied for by him, or if applied for had been abandoned or waived. For such invention he is required to make new application, subject to such rights as the public and other inventions have acquired in the meantime.* This, we think, is what the present statute means, and what, indeed, was the law before its enactment under the previous law of 1836. *If decisions can be found which present it in any different aspect, we can not admit them to be correct expositions of the law.* The counsel for complainant refers us to, and places special reliance on, the last clause of Section 53, of the act of 1870, where it is said: "But where there is neither model nor drawing, amendment may be made upon proof satisfac tory to the commissioner that such new matter or amendment was part of the original invention, and was omitted from the specification by inadvertence, accident or mistake.' But this clause relates only to the evidence which way be employed by the commissioner in ascertaining the defects of the specification.

It does not authorize him to grant a re-issue for a different invention, or to determine that one invention is the same as another and different one, or that two inventions essentially distinct constitute but one. *If, by new matter, in Section 4916, of the Revised Statutes, is meant such new substantive matter as might be the subject of another application for a patent, there was new substantive matter introduced into the specification of the re-issue in the present case;* for the description set forth in that specification has not the foundation for the first eight claims in it, and those eight claims themselves might have been the subject of another application for a patent at the time the original patent was applied for and taken out, leaving that patent valid and operative in respect to the claims it covered. * * .* "There is no evidence of any attempt to secure by the original patent the inventions covered by the first eight claims of the re-issue, and those inventions must be regarded as having been abandoned or waived, so far as the re-issue in question is concerned, subject, however, to the right to have made a new application for a patent to cover them; in other words, those eight claims are not for the same invention which was originally patented."

In Mahn v. Harwood, 112 U. S. 359, Justice Blatchford, in writing the opinion of the court, says: "In this very matter of re-issued patents it has also been frequently decided that it is a good defense, in a suit on such a patent, to show that the commissioner exceeded his authority in granting it. Such a defense is established by showing that the re-issued patent is for a different invention from that described in the original, inasmuch as the statute declares that it must be for the same invention."

In Electric Lighting Company v. Boston Electric Company, 139 U. S. 481-501, the court says:

"In the present case the original patent was not inoperative or invalid by reason of a defective or insufficient description of the invention, for the text of the specifications of the re-issue, aside from the claims, is substantially the same as that in the original. Nor was the application for the re-issue made because Tirrell in the original had claimed as his invention more than he had a right to claim as new, for his oath declares that the defect consists in the 'omission of claims.' The object of the re-issue was to prevent the patent from being confined to the apparatus illustrated in the drawings and described in the specifications of the original, and to enable it to cover apparatus covered by patents issued subsequently to the original, and especially apparatus covered by patent No. 230590. The new claims of the re-issue are not for the same invention set forth in the claims of the original." Accordingly the new claims were held void.

The case last cited enunciates principles which, we believe, applied must lead the court to conclude that claims 1 and 2 of Boyle's re-issue of patent are null and void. His original patent was not inoperative or invalid by reason of any defective or insufficient description of his invention. The object of his application for a re-issue, was as in the Electric Lighting Company case, to prevent his patent from being confined to the apparatus illustrated in the drawings and described in the original specifications, and to embrace an apparatus covered by a patent issued subsequently to another person.

In Coon v. Wilson, 113 U. S. 277, the court says, speaking by Mr. Justice Blatchford, on the matter of re-issued patents: "Although this re-issue was applied for a little over three months after the original patent was granted, *the case is one where it is sought merely to enlarge the claim of the original patents by repeating*

that claim and adding others; where no mistake or inadvertence is shown, so far as the short or sectional bands are concerned; where the patentee waited until the defendants produced their continuous band collar, and then applied for such enlarged claims as to embrace the defendants' collar, which was not covered by the claim of the original patent; and where it is apparent, from a comparison of the two patents, that the re-issue was made to enlarge the scope of the original. As the rule is expressed in the recent case of Mahn v. Harwood, 112 U. S. 354, a patent '*can not be lawfully re-issued for the mere purpose of enlarging the claim, unless there has been a clear mistake, inadvertently committed in the wording of the claim, and the application for the re-issue is made within a reasonably short period after the original patent was granted.*' *But a clear mistake, inadvertently committed in the wording of the claim, is necessary, without reference to the length of time. In the present case there was no mistake in the wording of the claim of the original patent. The description warranted no other claim. It did not warrant any claim covering bands not short or sectional. The description had to be enlarged in the re-issue to warrant the new claims in the re-issue. The description in the re-issue is not a more clear and satisfactory statement of what is described in the original patent, but is a description of a different thing, so ingeniously worded as to cover collars with continuous long bands, and which have no shorter sectional bands.*" The drawings showed no continuous bands, and the statement in the original patent that the "use of the short or sectional bands produces a saving of material, as compared to the old style of continuous band," shows that the patentee was drawing a sharp contrast between the only bands he contemplated —short sectional bands—and a continuous band of one piece of material as long as a collar. The original

patent industriously excluded from its scope a continuous band. In the re-issue, to cover a continuous graduated band, the two bands B B are converted into a single band, composed of the parts of B B, and while that is described as extending along the top or body of the collar, the "shorter graduated bands" are described as saving material, as compared with the old style continuous band of uniform width.

In Topliff v. Topliff, 145 U. S. at page 169 to 170, after a review of the authorities on the subject of the re-issue of letters patent, and the emphatic approval by the court of the doctrine announced in Coon v. Wilson, *supra*, the court says: "From this summary of the authorities it may be regarded as the settled rule of this court that the power to re-issue may be exercised when the patent is inoperative by reason of the fact that the specifications as originally drawn are defective or insufficient, or the claims were narrower than the actual invention of the patentee, providing the error has arisen from inadvertence or mistake, *and the patentee is guilty of no fraud or deception.*"

Why Did Boyle Apply for the Re-issue?

The record in this case answers that question, and to it we will now appeal. At pp. 263-265 is the affidavit of Boyle, filed with his application for a re-issue. It will be seen by that affidavit, at 264-265, where he says: "That on or about the 28th day of November, 1884, deponent observed in the Patent Office Gazette the report of a patent, No. 308,358, granted November 25, 1884 (see exhibits, page 25), to Frank B. Hanson, showing deponent's said invention in a form almost identical with one of the said constructions originally invented by deponent, and that he thereupon consulted with his attorney to ascertain how such a patent came to be issued to

said Hanson. That his attorney proceeded to investigate the matter, and in the course of a few days advised this deponent of the defect or insufficiency in his said patent, and that prior to being so advised this deponent had no thought or suspicion that his said patent was in anywise defective or insufficient; that thereupon deponent instructed his said attorney to prepare an application for a re-issue."

Now, it is to be remembered that this is the *ex parte* affidavit of Mr. Boyle, filed with his application for said re-issue. In this immediate connection we now call the attention of the Court to his cross-examination in the case at bar.

It will be seen at p. 112, that he claims to be a practical plumber, that he was educated in the public schools of Massachusetts; that he can read and write, and that he passes as an intelligent man in regard to all matters pertaining to water-closets, and with all terms used in connection therewith. That he has been the inventor of thirty or forty patents; that prior to the year 1883, he had had much experience in regard to inventions in plumbing and water-closets. (Record, p. 114). That the only construction he exhibited to Mr. Frasier, his patent solicitor, at or before making application for letters patent 291,139, are such as are shown in figures 1, 4 and 5 of that patent; that figures 2, 3 and 6 of that patent were sketched by Mr. Fraser, personally. (Record, pp. 120, 121, 620, 461-475). That he sent a complete closet to the office of Mr. Fraser before filing his application for the patent 291,139, and the closet so sent contained reservoir *E*, flushing-*chamber F*, and an air bell, as shown in figure 1, among its parts. (Record p. 123, X-Qs. 485, 491.) The closet sent to Mr. Fraser's office, as embodying his invention, had an air bell, with such water-ways as is shown in figure 1, and in practical use; when

water is permitted to run into flushing-*chamber F*, it would ascend by pipe *T* to the level of the water in that tank; part of it would run over into the inner pipe and thence down, running out through the injector. *That was the plan of his alleged invention, and that was the closet that he sent to Mr. Fraser embodying it; that he told Fraser that the valve to the tank E ought to be several times larger than the valves or outlet i of the flushing-chamber.* (Record pp. 123, 124; X-Qs. 496, 498). That he was in the habit of reading specifications before signing them, and specifications for patent 291139 were either read by him or read to him before he signed it; that he is sufficiently intelligent to understand the nature of a specification when it described the operation of a water-closet, and he understood these specifications when they were read over to him. (Record p. 124; X-Qs. 506, 509.) His attention was then called to figure 1, introduced in evidence as complainant's Exhibit No. 15, "Boyle's Experimental Tank," and he says, concerning it, that that was one of the experiments he made. (Record p. 126, X-Qs. 525½, 526).

X-Q. 527. Having experimented with it, you abandoned that for what you thought a better method—that is, you have sworn that you constructed a water-closet as shown in said figure, "Boyle's Experimental Tank?"

A. Yes, sir; this is the same tank.

X-Q. 528. Now, what I am asking you is, whether the tank you sent to Mr. Fraser's office you regarded as a better one, did you?

A. Yes, sir; for the New York market.

X-Q. 529. This matter, then, shown in figure 1, was a mere experiment of yours, was it?

A. Yes, sir; that was all.

X-Q. 530. It was not satisfactory, was it?

A. No, sir.

(Record p. 126.)

X-Q. 549. You have said, have you not, that you never constructed a tank such as is shown in figure 1, "Boyle's Experimental Tank," for the market?

A. No, sir.

X-Q. 550. The one which you say you constructed was simply an experiment?

A. Yes, sir.

X-Q. 556. It began and ended in experiment, did it not, so far as that tank was concerned?

A. Yes, sir.

X-Q. 557. You never pursued that tank further than the experiment, but turned aside to make tanks and flushing apparatus, such as is shown in figures 1, 4 and 5 of letters patent 291,139, did you not?

A. No, sir; I never did.

X-Q. 558. You regarded, then, the construction of the flushing apparatus, such as is shown in figure 1, "Boyle's Experimental Tank," simply and merely as an experiment, did you not?

A. Yes, sir.

X-Q. 559. And after experimenting with it a while you quit it and turned to other forms, and made such a flushing apparatus as is shown in letters patent 291139, in figures 1, 4 and 5, did you not?

A. Yes, sir.

X-Q. 560. And it was that flushing apparatus, such as shown in figures 1, 4 and 5, of letters patent 291139 that you perfected for which invention you applied for letters patent 291139, was it not?

A. Yes, sir.

(Record p. 126-128.)

X-Q. 637. You said in your direct, examination that the closet constructed as shown in figure 1 of "Boyle's Experimental Tank" would not be operative, did you not?

A. Yes, sir.

X-Q. 639. Was there any method of breaking the vacuum in the tank which you say you constructed like figure 1 of "Boyle's Experimental Tank?"

A. No, sir.

X-Q. 640. Is that why it was not operative?

A. I never intended it to be operative—for the water-closet to be used.

X-Q. 641. What did you intend it for, in the name of common-sense?

A. I wanted to get at the best shape to rarefy the air.

X-Q. 642. Then, as a matter of fact, you never intended the construction which you say you made, as shown in figure 1 of Boyle's Experimental Tank, to be an operative water-closet?

A. No, sir.

X-Q. 643. You began and ended it in experiment, did you not?

A. Yes, sir.

X-Q. 646. And you quit it, did you not?

A. Yes, sir, for a better one.

(Record p. 133.)

Now, in the light of these questions and answers, it is absolutly certain that Boyle never thought or intended that Fraser in writing his specifications and claims should so write them as to embrace and cover such a construction as is shown in figure 1, Complainants' Exhibit No. 15, "Boyle's Experimental Tank." (Shown in the Record at p. 110).

(Record p. 126.)

X-Q. 549. You have said, have you not, that you never constructed a tank such as is shown in figure 1, "Boyle's Experimental Tank," for the market?

A. No, sir.

X-Q. 550. The one which you say you constructed was simply an experiment?

A. Yes, sir.

X-Q. 556. It began and ended in experiment, did it not, so far as that tank was concerned?

A. Yes, sir.

X-Q. 557. You never pursued that tank further than the experiment, but turned aside to make tanks and flushing apparatus, such as is shown in figures 1, 4 and 5 of letters patent 291,139, did you not?

A. No, sir; I never did.

X-Q. 558. You regarded, then, the construction of the flushing apparatus, such as is shown in figure 1, "Boyle's Experimental Tank," simply and merely as an experiment, did you not?

A. Yes, sir.

X-Q. 559. And after experimenting with it a while you quit it and turned to other forms, and made such a flushing apparatus as is shown in letters patent 291139, in figures 1, 4 and 5, did you not?

A. Yes, sir.

X-Q. 560. And it was that flushing apparatus, such as shown in figures 1, 4 and 5, of letters patent 291139 that you perfected for which invention you applied for letters patent 291139, was it not?

A. Yes, sir.

(Record p. 126-128.)

X-Q. 637. You said in your direct, examination that the closet constructed as shown in figure 1 of "Boyle's Experimental Tank" would not be operative, did you not?

A. Yes, sir.

X-Q. 639. Was there any method of breaking the vacuum in the tank which you say you constructed like figure 1 of "Boyle's Experimental Tank?"

A. No, sir.

X-Q. 640. Is that why it was not operative?

A. I never intended it to be operative—for the water-closet to be used.

X-Q. 641. What did you intend it for, in the name of common-sense?

A. I wanted to get at the best shape to rarefy the air.

X-Q. 642. Then, as a matter of fact, you never intended the construction which you say you made, as shown in figure 1 of Boyle's Experimental Tank, to be an operative water-closet?

A. No, sir.

X-Q. 643. You began and ended it in experiment, did you not?

A. Yes, sir.

X-Q. 646. And you quit it, did you not?

A. Yes, sir, for a better one.

(Record p. 133.)

Now, in the light of these questions and answers, it is absolutly certain that Boyle never thought or intended that Fraser in writing his specifications and claims should so write them as to embrace and cover such a construction as is shown in figure 1, Complainants' Exhibit No. 15, "Boyle's Experimental Tank." (Shown in the Record at p. 110).

If he ever constructed such a flushing-apparatus at all, according to his own testimony, he regarded it as worthless, and when he made application for his patent did not omit it by inadvertence, accident or mistake, but intentionally. It is clear and explicit that he gave it up. He began with it and ended with it in experiment, and according to his own testimony proceeded with something which he regarded as better. This experimental tank he says he "never intended to be operative—for a water-closet to be used."

The question, then, will arise in the mind of the Court, why did he apply for the re-issue at all? His own testimony in the case at bar answers that question.

X-Q. 569. Now, Mr. Boyle, when did you first learn that Frank B. Hanson had been granted letters patent, No. 308358, dated November 25, 1884?

A. I saw it in the Official Gazette.

X-Q. 570. Where:

A. At the store of Henry Huber & Company, 85 Beekman Street.

X-Q. 571. Who called your attention to it, if anybody?

A. I generally pick it up once a week and look it through, and see if there is anything in connection with water-closets; I discovered it myself.

(Record p. 128).

X-Q. 581. When you saw it you say you went to Mr. Fraser's, your patent solicitor's, office?

A. Yes, sir,

X-Q. 582. You say he advised you to apply for the re-issue of your letters patent?

A. I think so; I won't be sure.

X-Q. 584. But did he tell you to get a re-issue of your letters patent.

A. Yes, sir.

X-Q. 586. Did he tell you that if you got a re-issue of your letters patent it would effect the Hanson patent in any way?

A. Yes, sir.

X-Q. 587. What effect did he tell you it would have —destroy it?

A. Yes, sir.

X-Q. 588. And he advised you to take that course?

A. Yes, sir.

(Record pp. 129-130).

Now, it is manifest that it was by the advice of Mr. Fraser to the effect, that if he could get a re-issue of his letters patent covering the patented combination which Hanson had obtained, he thereby would destroy the validity of the Hanson patent. It is obvious that the sole object of his applying for the re-issue was for the purpose of doing what Mr. Frasier advised; take a step, which, if accomplished, would result in the destruction of the Hanson patent and obtaining for himself what Hanson had been awarded. Nothing was shown or described in the Boyle original specifications or drawings indicating a desire to cover what Hanson claimed or what the patent office allowed him.

Referring again to Boyle's affidavit, at page 264, we find it is in direct conflict with his cross-examination, to which we have already referred. We have seen by his own testimony that the construction shown in figure 1, "Boyle's Experimental Tank," began and ended in experiment; that he never intended to make it an operative closet or a flushing aparatus. He says in his affidavit that through inadvertence or mistake of judgment his claims were drawn with less breadth than his specifications, and had not, as they should, covered broadly the application of such principal; that such inadvertence or mistake arose by and in consequence

of a misunderstanding between deponent and his attorney, Mr. Arthur C. Fraser, who prepared the application for his said patent.

Now, one reads his testimony in vain to find that any inadvertence or mistake arose by and in consequence of a misunderstanding between Boyle and his attorney, Fraser. As we have shown, the only sketches of a water-closet and the only constructions which he exhibited to Fraser were such as embodied the flushing *chamber F* as an essential part of it. The only closet that he ever showed to Fraser embodied such a chamber in its construction.

Arthur C. Fraser, in the cross-examination, testified:

X-Q. 80. Did Mr. Boyle inform you that the outlet of tank E should be larger than the outlet of the flushing-chamber F?

A. Yes, sir.

X-Q. 83. What reason did he state there was for it?

A. The reason he stated was, that when the valve was opened the water should enter the service-box faster than it could escape therefrom, so that it could quickly fill the service-box, in order that it might run out therefrom after the valve is closed, thereby enabling the flush to be of longer duration than the time that the pull was held.

X-Q. 84. In his original sketch that he presented to you, was there shown a tank, as appears in figure 5 of the original and re-issued patent, with the chamber underneath it, which, in the original patent, is marked F, substantially as shown in this figure 5?

A. Yes, sir; to the best of my recollection of his drawing it was essentially the same as in the construction of figure 5.

X-Q. 89. Mr. Boyle read that patent over after you had prepared the specifications, did he not (referring to patent 291,139)?

A. I think so, as it was his general custom to read the specifications.

(Record pp. 75-76.)

X-Q. 97. Did Mr. Boyle say to you that one tank was sufficient to operate the invention covered by his patent, No. 291,139, at any time before said patent was granted?

A. I have no recollection that he did, but am unable to testify positively that he did not.

X-Q. 98. Did you not testify in your examination-in-chief that your impression was that he did not?

A. I can not remember the exact substance of what I testified in my examination-in-chief, but my best recollection is that he did not tell me that a single tank, without a service-box, could be useful, until after his patent had been granted.

X-Q. 99. He never told you that until Hanson's patent had been granted, according to your best recollection?

A. It was then first that he told me that I recollect.

X-Q. 104. You generally got pretty full information from him of what you wanted before you drew the specifications, did you not?

A. Yes, sir; I always made it a rule with him, as with other clients, to ask about everything connected with the invention that I could think of, as having any bearing upon it.

(Record p. 76.)

X-Q. 130. And as a matter of fact, in showing you how he applied the injector, he illustrated it simply by figure 5, as shown in patent No. 291139, did he not?

A. He did the first time he ever showed me any sketch or drawings of his idea, but subsequently, and before I prepared the claim, he sent a complete operative tank to me like figure 1, of said patent drawing.

X-Q. 131. In that construction, was the outlet from the tank *E* larger than the outlet from the supply chamber *F*?

A. The proportions were the same as shown in the drawings, as I remember them.

X-Q. 132. And did he tell you that the water-closet sent to your office fully embodied his invention?

A. *Well, not in those words; he said that was* HIS NEW TANK, *or something to that effect—then explained it to me.*

(Record pp. 79-80.)

X-Q. 134. What did he say the object was in having the proportions as they are described in said patent 291139, that is, the outlet from chamber *E* and the outlet from flushing-chamber *F*?

A. The principal object, as he stated it to me, was to enable him to dispense with the valve at the outlet *i*, as he at first proposed to use the construction shown in his sketch and represented in figure 5, of the patent. The principal object, of course, was to enable him, as he said, to utilize the principle of breaking the vacuum and to secure the after-wash, which he did by causing the water to rise in the chamber *F*, and thereby seal the air bell.

(Record p. 80.)

Turning now to the affidavit of Mr. Fraser, who has figured so extensively in the obtaining of the original patent, obtaining the re-issue, the advising of this litigation, the testifying as an export, and the appearing as assistant counsel in St. Louis in the examination of the witnesses for defendant, we find precisely the

kind of affidavit that one would expect to find. At p. 266 of the record in his *ex parte* affidavit, he says: "That dependent drew the first three claims in said patent in their present form through a misapprehension of the essentials of said invention, which misapprehension arose from a misunderstanding between himself and the said Boyle, and without any fraudulent or deceptive intention on the part of this deponent, nor, he believes, of the said Boyle. That deponent was not aware of the defect or insufficiency in the said patent until after he first saw the patent of Frank B. Hanson, No. 308358, and that after examining this patent and ascertaining the circumstances of his grant, he advised the said Boyle that said Hanson had secured a patent covering the said Boyle's prior invention, and counseled said Boyle to apply for a re-issue of said patent and demand an interference with the said patent of Hanson."

Now, considering what Mr. Fraser has said in his cross-examination, the question naturally arises what the misunderstanding between himself and the said Boyle was. Surely the examination of Mr. Fraser fails to show it.

It is manifest from his examination and that of Mr. Boyle that the combination of mechanical devices which were designed to embody the Boyle alleged invention were properly described in the specifications and illustrated in the drawings and set forth in the claims of the original patent. And none of these show or indicate a combination which would admit of the omission of the flushing-chamber F.

It is likewise manifest that Boyle, before he saw the Hanson patent, never entertained the idea for an instant of making a water-closet embodying a construc-

tion without such a flushing-chamber, and that he never intended to claim any such construction in his original patent.

It is therefore *false that there was any inadvertence misapprehension or mistake made in the application for the original patent.* Boyle's application for a re-issue was undeniably fraudulent. And what Special Commissioner Frank T. Brown said, as will appear at page 267 of the Record, rejecting Boyle's application for a re-issue, to wit "The alleged defect or insufficiency in the specification appears to be simply the failure of appellant to present his invention in his original application as broadly as he might have done, and the correction which he now seeks to make involves a departure from the invention disclosed in his patent, inasmuch as it extends in scope said patented invention more than is justified in the subject-matter as disclosed in that patent," was in exact keeping with the facts of the case and the law applicable to all that class of cases, where an attempt is made to surrender an original patent in order to broaden the claims.

"What was suggested or indicated in the original specifications, drawings, or patent-office model, is not to be considered as a part of the invention intended to have been covered by the original patent, unless it can be seen from the comparison of the two patents that the invention originally patented was intended to embrace the things thus suggested or indicated in the original specifications, drawings or patent-office model, and unless the original specifications indicate that those things were embraced in the inventions intended to have been secured by the original patent."

Parker & Whipple Co. v. Yale Clock Co., 123 U. S. 87.

Nothing has been more strenuously denounced by this Court than what was done by Mr. Boyle in the surrender of his original and obtaining his re-issued patent. Thus, in Burr v. Duryee, 1 Wall. 577, the court, speaking through Mr. Justice Grier, said: "The surrender of valid patents and the granting of re-issued patents thereof, with expanded or equivocal claims, where the original was clearly neither inoperative nor invalid, and whose specification is neither defective nor insufficient, is a great abuse of the privileges granted by the statute, and productive of great injury to the public. This privilege was not given to the patentee, or his assignee, in order that the patent may be rendered more elastic or expansive for the suppression of all other inventions."

In Seymour v. Osborn, 11 Wall. 516, the court said: "Interpolations of new features or ingredients or devices, which are neither described, suggested nor indicated in the original patent or patent-office model, are not allowed, as it is clear that the commissioner has no jurisdiction to grant a re-issue, unless it be for the same invention as that embodied in the original letters patent, which necessarily excluded the right of such an application to open the case to new parol testimony, and a new hearing as to the nature and extent of the improvement. * * * * * * *Corrections may be made in the description or claims, where the patentee has claimed as new more than he had a right to claim, or where the description, specification or claim is defective or insufficient, but he can not, under such an application, make material additions to the invention which were not described, suggested, nor substantially indicated in the original specifications, drawings or patent-office model.* * * * * Letters patent re-issued for an invention substantially different from

that embodied in the patent are void and of no effect, and no jurisdiction to grant such a patent is conferred by any act of Congress upon the commissioner, and he possesses no power in that behalf, except what the acts of Congress confer."

And in the Yale Clock Co. case, at p. 98, the court says: "What the invention was it to be ascertained by consulting the original patent; and that while the new description may properly contain things which are indicated in the original specification, drawing or patent-office model (though not sufficiently described in the original specifications), *it does not follow that what is indicated in the original specifications, drawings or patent-office model, is to be considered as a part of the invention, unless the court can see, from a comparison of the two patents, that the original patent embodied as an invention intended to be secured by it what the claims of the re-issue are intended to cover.*"

Moreover, Section 53, of the act of July 8, 1870, in these words, "But no new matter shall be introduced in the specifications in any case of a machine patent, nor shall the model or drawings be amended except each by the other; but when there is neither model or drawing, amendments may be made upon proof satisfactory to the commissioner that such new matter or amendment was a part of the original invention, and was omitted from the specifications by inadvertence, accident or mistake, as aforesaid," carries with it a positive amendment that proof shall not be heard by the commissioner in any given case, where drawings or models have been filed with the original application." In the case at bar, the most full and complete drawings, containing six figures, illustrating plaintiff's original in-

vention, are shown, and as we have repeatedly said, in each and all of these, the flushing-chamber F forms a conspicuous element.

Careful reading of the original specification, examination of its drawings and claims, will disclose the fact that the original patent was neither inoperative nor invalid by reason of a defective or insufficient specification; and it is only where these things exist that there is a right of re-issuing patents. As we have shown by abundant authority, no power existed in the commissioner to permit of the surrender of a valid patent, in which there was nothing inoperative, defective or insufficient, simply to allow the inventor to embrace in his patent things which were not indicated, and which clearly he did not intend to claim in his original.

It is manifest, from the evidence in the case, that whatever was omitted from Boyle's original patent did not arise by "inadvertence, accident or mistake," but was purposely omitted. He omitted purposely everything relating to the construction of a closet to be operated with a single tank, because he began with that idea as an experiment, and, finding it inoperative, quit it, and never intended, according to his own statement, to perfect it into an operative tank. Now, it is absurd for him to claim that it was by "Inadvertence, mistake or misunderstanding," between him and his patent solicitor, that such constructions as are claimed in claims 1 and 2 of the re-issued patent were omitted in his original claims. If he ever made any such, *which is doubtful*, he began and ended with it in experiment. In his hands it was an inoperative construction and he abandoned it, and proceeded to some other combinations manifesting and embodying his alleged invention. It was his deliberate judgment, at

that time, that a structure, such as is shown in "Boyle's Experimental Tank" would be inoperative. Hence, not until Hanson obtained a patent for a construction similar to that shown in said "experimental tank" did Boyle become anxious to have a re-issue so as to appropriate what Hanson had claimed. Now, if we are correct in what we have said as to the cause of the omission, it is clear, under the law, that he could not surrender his original patent, even though the original specifications described such a combination, and claim the same under a re-issue.

In Liggett v. Avery, 101 U. S. 259, the court says: "It is obvious on inspection that the first and second of these claims are for substantially the same inventions which were disclaimed before the extension, and are for different inventions from that which was included in, and secured by, the letters patent as extended. The court below deemed this, amongst other things, a fatal objection to the validity of the re-issued letters patent. We agree with the Circuit Court; we think it was a manifest error of the commissioner in the re-issue to allow the patentee a claim for an invention different from that which was described in the surrendered letters and which he had thus expressly disclaimed. The pretense that the 'error had arisen by inadvertince, accident or mistake' within the meaning of the patent law, was too bald for consideration."

In James v. Campbell, 104 U. S. 370, the court says: "When the patent fully and clearly, without ambiguity or obscurity, describes and claims a specific invention complete in itself, so that it can not be said to be inoperative or invalid by reason of a defective or insufficient specification, *a re-issue can not be had for the purpose*

of expanding and generalizing the claim, so as to make it embrace an invention not described and specified in the original."

It is difficult to express the law on this subject more aptly and forcibly than in the words of Mr. Justice Grier, in the case of Burr v. Duryee, 1 Wall. 531, where, in delivering the opinion of the court, he says: "*The surrender of valid patents, and the granting of re-issued patents thereon, with expanded or equivocal claims, when the original was clearly neither 'inoperative or invalid,' and whose specification is neither 'defective nor insufficient,' is a great abuse of the privilege granted by the statute, and productive of great injury to the public.* This privilege was not given to the patentee or his assigns, in order that the patent may be rendered more elastic or expansive, and therefore, more available for the suppression of all other inventions. Of course if by actual inadvertence, accident or mistake, unintentionally committed, the claim does not fully assert or define the patentee's right in the invention specified in the patent, a speedy application for its correction before adverse rights have accrued may be granted, as we have explained in the recent case of Miller v. Brass Co.. *supra*, p. 350. But where it is apparent on the face of the patent, or by contemporary records that no such inadvertence, accident or mistake as claimed in the re-issue of it could have occurred, an expansion of the claim can not be allowed or sustained."

In the case at bar, after Hanson had obtained his patent Mr. Boyle first thought of claiming what Hanson claimed. His chief object in applying for a re-issue was to invalidate the Hanson patent; his next object was to obtain what Hanson had been granted. In the light of Boyle's cross-examination, from a fair con-

struction of his original patent, and in view of what the law is in such cases, we submit that it is the duty of the court to hold claims 1 and 2 of the re-issued null and void.

In this case Judge Thayer, before whom it was heard in the Circuit Court (38 Fed. Rep., 830), in substance held: That since the Boyle patent was surrendered and re-issued for the purpose of invalidating the Hanson patent for a similar invention; and since one element of the combination, claimed in the Boyle original letters, is omitted in combinations claimed in the re-issue, thereby enlarging certain claims; and since it appears, by the evidence, that the element so omitted was intentionally included in the combinations, as claimed in the original letters, for the purpose of describing combinations, that, as a whole, would constitute an operative and useful machine; and such element being, in fact, necessary to make the machine operative and useful — that the enlarged claims of the re-issue were void (a) because the original claims were not formulated by accident, inadvertence or mistake; (b) and because the patentee had such full knowledge of all the facts, when the original claims were patented, that his failure to claim the particular combination claimed in the re-issue amounted to an abandonment of the same to the public.

INFRINGEMENT.

If, as we think the evidence shows, the injector was a well-known substitute for the form of pump shown in the Peters and Donald patent, and could have been substituted for it without the exercise of more than ordinary mechanical skill at the date of that patent, then the first three claims of the Peters and Donald patent would seem to be infringed by the defendant's closet.

As to the first and second claims of the Boyle re-issue, the question of infringement depends upon whether or not said claims should be construed strictly or broadly. The defendant has used neither the tank, the tank valve nor the injector shown and described in the Boyle patent. The difference in the tanks, valves and injectors will appear from the following cuts:

The Boyle Tank.
(Fig. 6.)

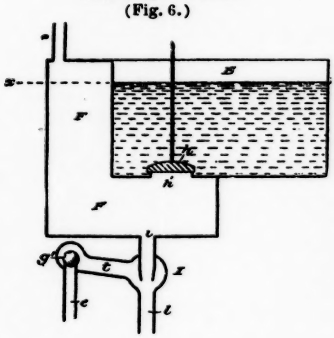

The Defendant's Tank.
(Complainant's Exhibit 10.)

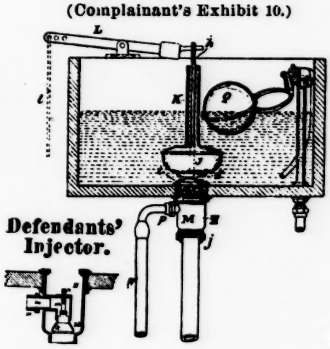

It will be observed that the defendant's tank is a plain box, without any lower chamber F, and that the form of injector used by the defendant differs from the form of injector shown in the Boyle patent in this: that while in Boyle's injector the water jet passes through a central nozzle, lettered *i* in the drawings, the water in the defendant's injector passes through an annular opening surrounding the mouth *k* of the air exhaust pipe *m*. In other words, the injectors are just the reverse of each other. This will appear more clearly from defendant's Exhibit No. 17, which is a sample of the injectors used by defendant. It is substantially identical with the Shapleigh water pump (Exhibits, p. 43) and the Eades sand pump (Exhibits, p. 49), while the Boyle injector is identical with the Thompson and Sprengel

pumps (Record, pp. 368 and 372). If Mr. Boyle's claims should be strictly construed and held to only include the special constructions shown and described by him in his patent, then the defendant has not infringed. In view of the prior art, a strict construction is evidently the one which should be adopted, if said claims, when so construed, would be valid; but, however construed, they seem to us clearly void, for lack of either substantial novelty or invention, as well as for the other reasons we have discussed.

SUMMARY.

1st. We submit that claims 1 and 2 of Boyle's re-issued patent were void, because they were not for the same alleged invention described, shown or claimed in his original patent.

2nd. That said claims are void for lack of invention in the subject-matter thereof.

3rd. That said claims are void, for lack of substantial novelity in the subject-matter thereof.

4th. That said claims are void, because neither of them cover any combination originally intended to be covered by Boyle's original patent, but were suggested by the subsequent grant of letters patent to Hanson, and were applied for to cover the combinations therein claimed.

5th. That the omission of said claims from the original patent did not *arise by inadvertence, accident or mistake*, nor was said original patent rendered inoperative or invalid by reason of a defective or insufficient specification.

6th. That said re-issued patent is broader than the original, and was not applied for within a reasonable time.

7th. That defendant has not infringed the claims of said re-issued patent.

We also contend that the Peters & Donald patent was void ab initio.

1st. Because a foreign patent for the same invention had been obtained and allowed to expire, long before etters patent of the United States were applied for, and that the patent sued on was, therefore, granted without authority of law.

2nd. Because Peters and Donald intentionally abandoned their right to letters patent of the United States before their application for an American patent was filed, and before any assignment was executed.

Finally that the degree was for the right party, and should be affirmed.

Respectfully submitted,

SENECA N. TAYLOR and
BENJAMIN F. REX.
Counsel for Defendant.